DESIGN REPORT

DOWNEY FARMSTEAD RESTORATION

Prepared for
City of Kent
Public Works Engineering

Prepared by
Herrera Environmental Consultants, Inc.

HERRERA

Note:
Some pages in this document have been purposely skipped or blank pages inserted so that this document will copy correctly when duplexed.

DESIGN REPORT

DOWNEY FARMSTEAD RESTORATION

Prepared for
City of Kent Public Works Engineering
400 West Gowe Street
Kent, Washington 98032

Prepared by
Herrera Environmental Consultants, Inc.
2200 Sixth Avenue, Suite 1100
Seattle, Washington 98121
Telephone: 206/441-9080

In association with
URS Corporation
1501 4th Avenue, Suite 1400
Seattle, Washington 98101
Telephone: 206/438-2700

November 8, 2013

CONTENTS

Introduction 1

Project Location 1
Project Goals 1

Project Design Description 5

Project Elements 5
Frager Road Realignment 5
Side Channel/Floodplain Excavation 5
Side Channel Habitat Structures 6
Floodplain Habitat Structures 6
Engineered Logjams 7
Vegetation 7

Analysis 9

Hydrology 9
Hydraulic Analysis 10
One-Dimensional Hydraulic Model (HEC-RAS) 11
Two-Dimensional Hydraulic Model (RiverFLO-2D) 12
Scour Analysis 14
Large Wood Structural Stability Analysis 15
Pile Analysis 16
Other Geotechnical Considerations 17

References 19

Appendix A 100 Percent Design Plans
Appendix B Hydraulic Scour Analysis Results
Appendix C Large Wood Structures Vertical Stability Calculations

TABLES

Table 1. Summary of Green River Flows..... 10
Table 2. Soil Parameters For L-Pile Analysis..... 17

FIGURES

Figure 1. Vicinity Map, Downey Farmstead Restoration Project, King County, Washington..... 2
Figure 2. Downey Farmstead Restoration Project Site Existing Conditions. 3

INTRODUCTION

The City of Kent proposes to build a habitat restoration project at what is known as the Downey Farmstead site, which is adjacent to the Green River in unincorporated King County, Washington (see Figure 1). The project site comprises approximately 22 acres of land that has been used for agriculture for more than 100 years. The project would create a side channel network and associated floodplain areas connected to the Green River to enhance juvenile fish habitat. The City of Kent (City) purchased the four parcels that comprise the site between 1996 and 2008 and is the lead project proponent.

This document describes the project design analyses and the basis for various decisions used to develop the current 100-percent-complete design plans (see Appendix A). Additional details about the project site are provided in the Preliminary Design Report (Herrera and URS 2011).

Project Location

The project site is located along the left (south) bank of the Green River between river mile (RM) 21.5 and RM 22.3, and between Frager Road S. and State Route (SR) 516 (Figures 1 and 2). The downstream edge of the site coincides with the confluence of Mullen Slough with the Green River. The City acquired four parcels of land, totaling 21.81 acres, which used to be the Downey Farmstead. More recently, this land was used for a meat packing plant, tree nursery, a private residence, and adjacent truck parking and maintenance (Geomatrix 2008a, 2008b, 2008c).

Project Goals

The primary goal of the project is to create off-channel rearing and refuge habitat for use in winter and spring months by juvenile salmon (particularly juvenile Chinook salmon) that inhabit the Green River. Enhancing habitat for improved juvenile salmonid rearing, lifestage diversity, and productivity is a priority in the Green River watershed (Collins and Sheikh 2005; King County 2012). A secondary goal of the project is to create additional flood storage to help alleviate flood damages in urban and agricultural areas in the project vicinity. Realignment of Frager Road S. through the site is necessary to allow creation of the side channel network and expanded floodplain; both the City and King County require this road to remain in service through the project area. The realigned road is being designed to meet King County standards.

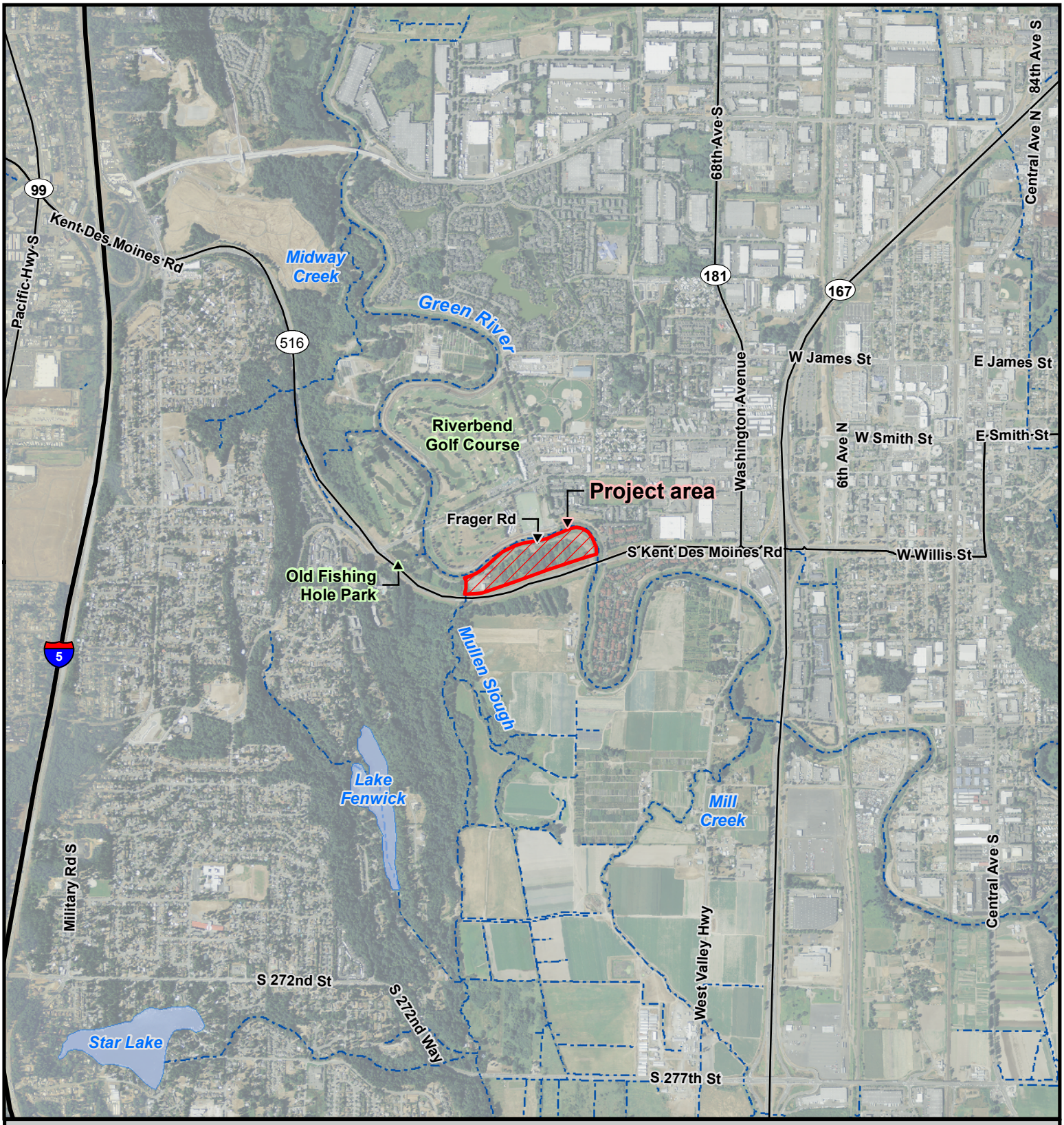

Legend

- Project area
- Lake
- Highway
- Stream (King County, 2009)

Figure 1. Vicinity map, Downey Farmstead Restoration Project, King County, Washington.

N

0 1,100 2,200 4,400 Feet

HERRERA ENVIRONMENTAL CONSULTANTS

Aerial photograph: USDA, 2009

K:\Projects\09-04437-000\Project\vicinity_map_predesign_report.mxd

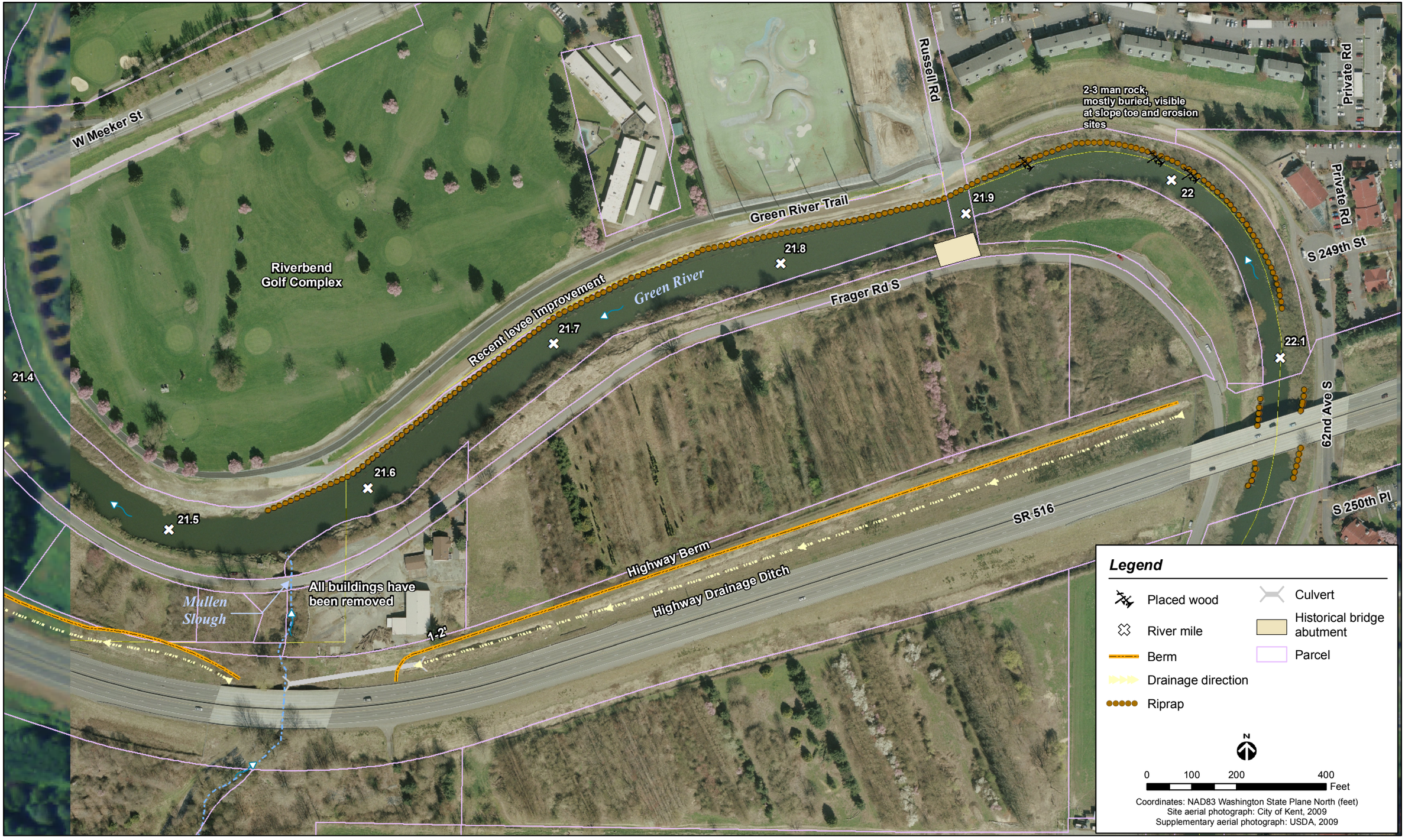

Figure 2. Downey Farmstead Restoration project site existing conditions.

Project Design Description

The 100-percent-complete design plans are provided in Appendix A. This section provides a narrative description of the key design elements included in those plans.

Project Elements

Frager Road Realignment

Frager Road S. will be realigned to the south to make room for the side channel restoration. The new road grade is set at an elevation of approximately 46 feet (in the North American Vertical Datum of 1988 [NAVD 88], which is the datum being used for design and construction). This road elevation equates to approximately 3 feet above the 100-year recurrence flood elevation.

Side Channel/Floodplain Excavation

Creation of a side channel in the Green River floodplain is the central feature of this project. The design of the side channel includes one primary upstream inlet and two secondary inlets. The three inlets have design thalweg elevations of 22.0, 21.0, and 20.0 feet (NAVD 88) from upstream to downstream. The reason for including several inlets to the side channel in the design is that it can be difficult to assure that a single inlet will remain open over the long term, particularly on the inside of an entrenched meander bend. There is definite potential for sedimentation to occur at one or more of the three proposed inlets, which could reduce connectivity of the side channel to the main stem river at low flow. Varying the inlet elevations is intended to provide active side channel flow during peak juvenile salmonid outmigration periods, and to provide variety in the flow patterns and habitat conditions during that time. The apex engineered logjams located at the inlet entrances, as described below, will help to prevent a sedimentary sill from forming at each inlet; nonetheless, redundancy in the inlet configuration is important to achieve the primary project goal. Natural side channels in the Pacific Northwest often have multiple inlets, with variability in their connectivity with the main stem river in low flow conditions through the years. At any point in time, one side channel inlet may be blocked by sediment accumulation or debris while another inlet nearby is likely to remain open. The design for this project seeks to enable such natural variability to occur without hindering project success.

The side channel will have a single outlet to the existing Green River channel with a thalweg elevation of 18.0 feet (NAVD 88). With a total side channel length of approximately 1,875 feet, the gradient of the side channel will vary between 0.1 to 0.3 percent. There is a balance to be struck with this gradient and the associated thalweg elevation at each end, between wanting to more reliably transport sediment through the side channel (which could generally be expected with a steeper gradient) and wanting connectivity with the river at the upstream portions with greater frequency (which can be achieved with a lower thalweg elevation at the inlets). To determine an appropriate balance for this project, Herrera Environmental Consultants (Herrera) reviewed the side channel design elevations at the City's recently

constructed Riverview Park Side Channel Restoration Project located upstream of the Downey Farmstead site and also coordinated with Josh Latterell of the King County Department of Natural Resources and Parks (a senior ecologist who has been involved with the Downey Farmstead project since its inception). In addition, Herrera and the City coordinated with Kollin Higgins at King County and Martin Fox at the Muckleshoot Indian Tribe. Through that review and follow-up discussion, Herrera determined that a reasonable balance would be achieved with inlet elevations as low as 20 feet and an outlet thalweg elevation of 18 feet. The design inlet and outlet thalweg elevations are lower than was shown in the preliminary design plans (Herrera and URS 2011) in order to achieve more reliable flow-through conditions in the targeted months of the year for juvenile salmonids and also to provide some sediment storage capacity within the side channel. It is expected that sedimentation will slowly accumulate in the new side channel over time, given the sediment loading in the river and the flat gradient of the site. A lower elevation profile through the side channel can accommodate that sedimentation to a greater extent without adversely affecting the habitat value that the project can provide.

As designed, the side slopes of the side channel vary, with 3 horizontal to 1 vertical (3H:1V) slopes in the lower portion of the channel (below an elevation of 25 feet [NAVD 88]), and flatter slopes above (flatter than 5H:1V). Four islands, with top elevations varying between 35 and 40 feet (NAVD 88), will be located on the north edge of the site between the main river channel and the new side channel. The varying island elevations will provide diversity in the vegetation communities that will be established on site, while enabling tall trees to grow in close proximity to the main stem channel and thus provide valuable shade benefits to reduce water temperatures. These islands in the design are in part the result of a request from the Muckleshoot Tribe to maximize tree growth on the north edge of the site.

Side Channel Habitat Structures

Twenty-two side channel habitat structures (identified as “Type 1” in the 100-percent-complete design plans, Appendix A) will be installed at the toe of the side channel slopes. Each side channel habitat structure will be composed of four habitat logs lashed by chain to two vertical timber piles. These structures are intended to provide hydraulic roughness and cover for fish during periods of the year when water is present in the side channel network. The piles and cable will serve to hold the logs in place so that their function can reliably be provided for decades. However, these structures are not intended to “lock in” the side channel thalweg alignment, as it is desirable for natural processes to reshape that alignment to an extent. By setting these structures at a low elevation, they can likely remain in contact with side channel flows for a longer period of time throughout the life of the project, regardless of the thalweg alignment.

Floodplain Habitat Structures

Twenty-seven floodplain habitat structures (identified as “Type 2” in the 100-percent-complete design plans, Appendix A) will be installed at various locations on the side channel side slopes. Each floodplain habitat structure will be composed of three habitat logs lashed by chain to two vertical timber piles. These structures are intended to provide cover for fish during times of higher water levels and to “jumpstart” formation of complex habitat features

on the side slopes, as will occur naturally over time with woody debris accumulations and woody vegetation growth.

Engineered Logjams

Engineered logjams ("Type 3" ELJs) will be installed at each of the three side channel inlets on the left bank of the Green River. Each ELJ will be positioned at the downstream side of an inlet. Each of the three ELJs will be composed of 42 logs placed in 14 layers and pinned amongst 16 vertical timber piles. The upstream-oriented faces of the Type 3 ELJs will be packed with wood slash material to reduce void space in the structure and to provide additional habitat cover benefit for fish. These structures will be backfilled with riprap within the core of the log matrix to further decrease the void space in the structure and to provide ballast to counteract the buoyancy of the wood. Selected logs in the top three layers of the structure will be chained to the piles to further counteract buoyancy of the wood structure.

During higher flows, the ELJs will create deep scour pools along the upstream edge and extending in the downstream direction into the inlet. After flood waters recede, the scour pools wrapping around the ELJs are expected to fill in partially with sediments, but a shallow depression in the channel bed should remain at each structure, promoting hydraulic connectivity between the main stem channel and the side channel inlets to offset the tendency for sediment to settle at the inside of the meander bend and block that connectivity at low flows. The ELJs will be capable of trapping floating woody debris over the long term, but it is expected that most floating wood will tend to pass by them on the outer (north) edge of the meander bend. Thus, there is not a concern for the logjams naturally expanding to such a size that could block one or more of the inlets.

Vegetation

Disturbed portions of the site and all new excavated surfaces will be replanted with native vegetation in four distinct habitat zones:

1. **Scrub-Shrub (PSS)** – The scrub-shrub zone is located along the side channel and extends up to 28 feet elevation, where greater bank protection is needed. This zone will be the most difficult in which to establish a healthy native vegetation cover due to long periods of inundation from winter and spring flows. Multi-stemmed willows (*Salix* spp.) and red osier dogwood (*Cornus sericea*) will help stabilize the stream banks and will provide some stream shading to reduce water temperatures. This area will also be planted with groundcover species including sedge (*Carex* spp.), rush (*Juncus* spp.), and bulrush (*Schoenoplectus* spp.).

2. **Forested Wetland (PFO)** – The forested wetland zone begins at the 28-foot elevation contour and extends up the side slopes and atop two of the islands to elevation 35 feet. This zone is expected to be subject to occasional inundation during floods and will remain moist from late fall into early summer. Greater species diversity is included within this planting zone, including canopy species such as red alder (*Alnus rubra*), Oregon ash (*Fraxinus latifolia*), and black cottonwood (*Populus balsamifera*). In addition to willow (*Salix* spp.) and red-osier dogwood (*Cornus sericea*), the shrub layer in this zone includes Pacific ninebark (*Physocarpus capitatus*). The goal is to increase vegetation diversity and eventually, stream shading.

3. **Forested Upland** – The forested upland zone extends from elevation 35 feet to the top of the side slopes within the site and also atop two islands in the grading plan. The species selected for planting in this zone consist of hardy natives adapted to drier summer conditions. The species composition includes both native trees and shrubs, including sore pine (*Pinus contorta*), black cottonwood (*Populus balsamifera*), and Douglas fir (*Pseudotsuga menziesii*). The shrub layer consists of beaked hazelnut (*Corylus cornuta*), oceanspray (*Holodiscus discolor*), red flowering current (*Ribes sanguineum*), and snowberry (*Symphoricarpos albus*).

4. **Steep Slope** – The steep slope vegetation zone is located on the north edge of the site along the existing Green River bank on areas that will not be regarded. The plants in this zone consist of multi-stemmed species with rhizomatous root systems that will more easily spread and stabilize vulnerable soils. Species include plants tolerant of both wet and dry conditions, such as beaked hazelnut (*Corylus cornuta*), oceanspray (*Holodiscus discolor*), wood rose (*Rosa gymnocarpa*), and snowberry (*Symphoricarpos albus*).

Vegetation zones were modified from the preliminary design (Herrera and URS 2011) based on the inundation predictions described in the *Hydraulic Analysis* section in this report.

ANALYSIS

The following analyses were conducted to support project design:

- **Hydrology** – Low, average annual, and peak (2-year and 100-year) flows were analyzed to support hydraulic analyses.
- **Hydraulics** - Hydraulic modeling of low flow water levels was performed to support determination of side channel inlet elevations. Hydraulic modeling of low, average, and high flow water levels was performed to determine the delineation between planting zones. Hydraulic modeling of a range of flows was performed to assess flow patterns through the side channel network, potential for sediment deposition, and flood reduction benefits in the surrounding project area.
- **Scour** – Scour depths were estimated at the large wood structures to determine the necessary depth of pile embedment to prevent unwanted deformation or complete structure failure.
- **Large Wood Structural Stability** – To maintain long-term stability, buoyancy and drag forces were evaluated to support pile design for the Type 1 (channel), Type 2 (floodplain), and Type 3 (engineered log jam) habitat structures.
- **Geotechnical** – A geological/geotechnical investigation was conducted to further evaluate the soil characteristics at the site and to provide recommendations for ELJ pile installation.

Hydrology

The hydrologic data used in support of hydraulic modeling for project design were adapted from earlier studies of the Green River and other publicly available data. The studies include a hydrologic analysis performed by Northwest Hydraulic Consultants (NHC 2008) in developing a HEC-RAS hydraulic model of the Green River for King County, and the hydrologic report prepared for the Riverview Park restoration project (Tetra Tech 2008). Table 1 summarizes the hydrologic data used in this analysis. Additional information on hydrology of the Green River can be found in Herrera and URS (2011), and in design flood hydrographs for the Green River Basin (USACE 2012). The US Army Corps of Engineers (USACE) developed different flood discharge estimates for the Green River based on operations at the Howard Hansen Dam (USACE 2012). These values, including a 100-year discharge estimate of 12,000 cubic feet per second (cfs) at the Auburn Green River gauge (USGS gauge number 12113000), were made available after the calculations were completed for the Downey Farmstead project design. However, the 100-year discharge value is generally consistent with the value used for this design, as shown in Table 1.

In addition to these flow rates, flows of 800 cfs and 1,800 cfs in the Green River were identified as key for project design purposes. A flow rate of 800 cfs is representative of

typical conditions during juvenile Chinook out-migration in the river, and thus was used as a basis for determining the appropriate elevation of the side channel thalweg. A flow rate of 1,800 cfs is representative of conditions that occur for a period of 4 to 5 months in the winter and spring, which will result in constant inundation of regraded and revegetated areas of the site at lower elevations along the side channel and the inlet and outlet connections to the main stem river channel. This flow was used as a basis for defining planting zones in the lower elevation range of the excavation.

Table 1. Summary of Green River Flows.

	Summer Low-flow (cfs)	Average Annual (cfs)	2-Year (cfs)	100-Year (cfs)
At the SR 516 bridge	112[a]	1,339[b]	8,850[c]	12,530[d]
At Mullen Slough confluence	114[f]	1,353[f]	8,940[f]	12,690[d]
Mullen Slough Inputs	2[d]	14[f]	90[c]	160[f]

[a] Tetra Tech (2008)
[b] Average annual statistics from USGS gauge near Auburn (calculated post-dam construction)
[c] From existing or projected exceedance curves
[d] NHC (2008)
[e] Engineer's estimate
[f] Calculation based on data provided herein
cfs: cubic feet per second

Hydraulic Analysis

The objectives for hydraulic modeling on this project were to:

1. Provide estimates of peak water levels and flow velocities to use in scour and stability calculations for design of stable engineered log structures
2. Demonstrate that the project will have no significant adverse effects on surrounding land in the 100-year recurrence flood event
3. Identify appropriate side channel inlet and outlet elevations to ensure that project goals related to side channel activation and duration are met
4. Determine important elevations for revegetation of the project site based on inundation frequency
5. Evaluate the potential for the side channel to experience sediment deposition that would raise the inlet elevations and the side channel thalweg, thus reducing the amount of time that water flows through the side channel

An existing one-dimensional HEC-RAS hydraulic model was available to evaluate hydraulic characteristics of the project area. This steady state HEC-RAS hydraulic model was developed as part of the conceptual design and feasibility assessment phase of this project. That model is described in detail in the Hydraulic and Geomorphic Analysis Report that is appended to the preliminary design report for the project (Herrera and URS 2011). This is a commonly

accepted model for demonstrating project effects on peak water surface elevations during flood events in a regulatory context, via comparing existing versus proposed conditions.

Because HEC-RAS is a one-dimensional model, it struggles to accurately predict hydraulic conditions where divergent and convergent flow conditions occur, such as those expected at or near the side channel inlets and outlet. The HEC-RAS model was well suited to assess the first two of the five objectives listed above, but not well suited to represent complex hydraulic characteristics needed to assess the last three objectives. To provide a more detailed hydraulic analysis within the immediate project site area, a two-dimensional hydraulic model was developed using the RiverFLO-2D software program. This model (used for proposed conditions only) can more accurately depict summer low flow and average annual flow conditions within the project reach. It was also used as a basis for assessing inlet and side channel hydraulics for small floods that could result in sediment deposition. Understanding the hydraulics at these lower flows is critical to maximizing the ability to meet the project goal of providing off-channel rearing and refuge habitat for salmonids at key times of the year.

The HEC-RAS model developed during the preliminary design phase of this project is useful for predicting the overall effect of the project on 100-year flood water surface elevations because, during such an extreme flood, the entire project area will be inundated and the divergent and convergent flow characteristics expected during lower flow conditions will not be present.

The following section summarizes the modeling that was performed using RiverFLO-2D to meet the objectives stated above.

One-Dimensional Hydraulic Model (HEC-RAS)

The USACE HEC-RAS hydraulic model program was used to inform the design of hydraulic structures by estimating hydraulics of 2-year and 100-year recurrence interval flows, and to demonstrate that the project will have no significant adverse effect on 100-year water surface elevations.

The HEC-RAS software program was developed by the USACE Hydrologic Engineering Center (HEC). HEC-RAS is a one-dimensional water surface profile program that is used for modeling both steady and unsteady, gradually varied flow. The computational procedure of a steady-state HEC-RAS model is based on the solution of the energy equation and energy losses between channel/floodplain cross-sections. As such, as long as the flow is uniformly perpendicular to the cross-section, a one-dimensional model provides a good approximation of open channel hydraulics. The Downey Farmstead project site exhibits these characteristics for higher flood flows, but not during lower flows.

The HEC-RAS model results demonstrate a general increase in flood conveyance in the project reach, as expected, with a lowering of flood water surface elevations for the simulated 2-year and 100-year floods. The simulated 100-year flood peak water surface elevation decreases on average from 0.03 foot to 0.18 foot in the project area. There is a significant decrease of approximately 0.3 foot predicted upstream of the project area at the SR 516 bridge. Model results also suggest that the 100-year flood water surface elevation will decrease for miles

upstream, with a 0.1-foot decrease simulated approximately 5 miles upstream. Therefore, the project will have no adverse flood impacts and will create significant upstream flood benefits.

The simulated 2-year flood results demonstrated similar characteristics. The water surface elevation decrease in this flood event is predicted to be greater at the upstream project extents near the SR 516 bridge (0.4-foot decrease) because most of the flow is contained within the channel and the increased flood conveyance as a result of the project is mostly associated with the main stem channel. These results indicate significant flood reduction benefits can be achieved for more frequent flood events.

The simulated 100-year flood results from the HEC-RAS model were also used to assist with the scour and engineered logjam stability calculations. Average flow velocities along the river banks of 4 feet per second and water depths of 25 feet were used in the scour and force balance calculations presented later in this report.

Two-Dimensional Hydraulic Model (RiverFLO-2D)

Overview

As previously described, a more detailed two-dimensional hydraulic model was constructed to assess the more complicated flow patterns associated with the side channel to assess the performance of the inlets and side channel. A full calibration of the RiverFLO-2D model was not conducted, since the model was used only as a tool to assess the changes around the inlets and to evaluate hydraulic patterns.

RiverFLO-2D is a two-dimensional, finite element, hydrodynamic model that can be used to route flood flows over complex channel and floodplain topography and bathymetry and provide high resolution of flood hydraulics. It simulates detailed hydraulics using a flexible triangular mesh to represent the bathymetric and topographic surface of channels and adjacent floodplain areas without the stability limitations of older two-dimensional, finite element models. The flexible triangular mesh allows the hydraulic modeler to refine the density and resolution of the model to approximate detailed flow fields around key features of interest in complex river environments.

Model Boundary Conditions

Two-dimensional numerical models like RiverFLO-2D require inputs defining boundary conditions including the computational mesh over which flows are routed, hydraulic roughness values applicable to different areas of the mesh, and a discharge hydrograph that defines the computational domain. Boundary conditions and other input data developed for the model are described below.

The topographic and bathymetric data used to develop the computational mesh were obtained from the survey base map prepared by the City for project design for site areas that will not be altered during construction, and the survey data were supplemented by channel and floodplain cross-section information in the HEC-RAS model extending upstream and downstream of the site. For areas that will be altered by project construction, the topographic and bathymetric surface in the mesh was based on proposed grading as shown in

the design plans. Hydraulic roughness values were assigned to different areas of the mesh based on existing and proposed roughness features such as vegetation and wood structures, and representing fairly smooth channel substrate conditions as prevail at the project site. Specific roughness values were taken from Chow (1959) and combined with professional judgment and hydraulic modeling experience with the RiverFLO-2D software.

The upstream boundary condition on the Green River was established upstream of the SR 516 bridge. This allowed flows to distribute and equilibrate in the hydraulic model through the bridge opening such that the model results within the project site area downstream of the bridge would not be influenced by the upstream boundary condition. Because the two-dimensional model was only used to model low-flow scenarios where the flow is contained entirely within the main stem and side channel banks, a shorter model reach length than is usually necessary was acceptable. A secondary flow input from Mullen Slough was included as a second upstream boundary condition just upstream of the SR 516 bridge over the slough.

The downstream boundary condition was established approximately 850 feet downstream of the proposed side channel outlet connection to the main stem river channel. A Type 1 water surface elevation was assumed for the downstream boundary condition. The water surfaces were obtained from the HEC-RAS model for each simulated discharge. Five discharges were modeled in RiverFLO-2D to assess project objectives related to side channel inlet performance:

1. **Summer low flow condition** – 112 cfs in the Green River, 2 cfs in Mullen Slough
2. **Average annual flow condition** – 1,339 cfs in the Green River, 14 cfs in Mullen Slough
3. **Key flow scenario for determining side channel elevations** – 800 cfs in the Green River
4. **Key flow scenario for revegetation design** - 1,800 cfs in the Green River
5. **2-year return interval flow** – 8,850 cfs in the Green River, 90 cfs in Mullen Slough

Results

The following is a summary of the results as they pertain to the design of the inlet in addressing the following project objectives:

- Identify appropriate side channel inlet and outlet elevations to ensure that project goals related to side channel activation and duration are met
- Determine important elevations for revegetation of the project site based on inundation frequency
- Evaluate the potential for the side channel to experience sediment deposition that would raise the inlet elevations and reduce the length of time that water flows through the side channel

The design of the side channel inlet was iteratively adjusted to ensure connectivity at a flow rate of 800 cfs. The inlet was shaped as a two-stage channel (containing a low flow inset

channel and benches above it on each side, upon which flow spans a greater width) to allow variation of the side channel activation. Water depth simulated at the inlet for the 800 cfs scenario ranges from 1 to 2 feet. The side channel will not be connected for the summer low flow scenario, but the inlet(s) will be within a few feet of the water surface at that time of year so infiltration and subsurface hydraulic connectivity is likely.

For the average annual flow of 1,339 cfs, the simulated water depth at the side channel inlet ranged from 2 to 4 feet, suggesting a high level of hydraulic connectivity between the main stem and side channels even if a moderate amount of sediment aggradation were to occur. The inlet and side channel geometry was also adjusted to provide appropriate flow velocities during the average annual flow for in- and out-migration of salmonids. The simulated velocities ranged from 2 to 3 feet per second in the main side channel inlet, decreasing to 0.5 to 1 foot per second, on average, downstream of the inlet. Flow velocities of 0.5 to 1 foot per second were relatively constant in the model output throughout most of the downstream part of the inlet. The simulated flow velocities for the remaining downstream portion of the side channel remained relatively consistent from 0.5 to 1 foot per second. Simulated flow velocities along the edge (edge habitat) of the side channel during average annual flow were less than 0.25 foot per second. These velocities are appropriate for in- and out-migration of salmonids.

For the 2-year flood, it was noted that the modeled velocity vectors skimmed over the floodplain and did not follow the side channel alignment. The simulated flow velocity in the side channel at the junction between the first and second side channel inlets was close to zero, suggesting that aggradation is likely to occur in smaller floods, in which sediment supply and bedload may be significant. The design elevation of the floodplain between the first and second side channel inlets was raised to influence the velocity vectors to divert higher flows to follow the side channel alignment. This had a significant effect on the modeled flow velocities for the 2-year flow. Some aggradation is anticipated during this flow, but there is likely enough flow with this floodplain grading modification to help mobilize sediment for a variety of larger flood flows where sediment supply is most prevalent.

Model results for the 1,800 cfs flow were used to support revegetation design. A flow of 1,800 cfs represents 4 to 5 months of constant inundation in the winter and spring months, and is typical during the early growing season. Results for the 1,800 cfs model run provided water surface elevations of approximately 26.2 feet (NAVD 88) at the upstream end of the side channel, 25.8 feet near the middle of the side channel, and 25.2 feet near the downstream end of the side channel. The grading and vegetation plan for the side channel banks were designed based on these results.

Scour Analysis

Undermining of the Type 3 ELJs due to erosion of the surrounding alluvium and structure backfill (i.e., scour) is a significant threat to long-term structure stability and performance. The structures are designed to engage fast-moving water, which will result in scour at the base of the structures. If one or more of the structures is undermined by scour, displacement or fracturing of piles and loosening of logs attached to piles could occur, triggering breakup of the structure mass and potential loss of structure performance. Thus, a scour analysis

is highly important to support determination of pile embedment depths that will prevent displacement or loss of ELJ anchoring piles in a scouring event.

The Type 3 ELJs are each positioned at the apex of what will be islands at higher flow, and on the inside of a bend in the Green River. Because scour calculation equations have not been developed in academia or amongst government agencies for natural or constructed logjams, bridge pier scour equations were adapted for this purpose. The Type 3 ELJs were evaluated for pier scour because they will function similarly to bridge piers in that flow will split around them, and they will develop scour holes around the waterward face similar in pattern to those that develop around bridge piers. Using pier scour equations provides useful information on potential scour at the ELJs but likely results in an overestimate because flow will not converge on the downstream side of the ELJ structure (because the downstream side will be an island of existing and backfilled soil with vegetation growing atop it). Estimates of the maximum probable scour depth that may occur at the ELJs was calculated for the 100-year recurrence design flood event.

Scour calculations were completed using two equations; the Johnson and Torrico Equation (a correction of the CSU equation [FHWA 2001] for wide piers) and the Simplified Chinese Equation (Chase and Holnbeck 2004). The equations consider the following parameters to calculate scour: size and shape of the obstruction (i.e., the structure); obstructed and unobstructed channel width; flow depth and velocity at and upstream of the obstruction; the flow angle of approach at the structure location; median diameter of bed material (d_{50}); the size of bed material for which 95 percent is smaller (d_{95}); and various coefficients and correction factors that account for the structure porosity, shape, and location along a channel bend. Scour was calculated for the ELJs using the 100-year peak flow velocity simulated in the main stem river channel with the HEC-RAS model. Because the effects of the wider floodplain available to flow following construction were not incorporated into the model that yielded the flow velocities used in these calculations, it is expected that the scour estimates are conservative, as they represent generally higher flow velocities in the river channel than will occur with the project in place. Additionally, the position of the ELJs on the inside of the river bend will lead to lower local flow velocities than estimated by the one-dimensional HEC-RAS model, also contributing to a conservative estimates of scour.

The scour analysis resulted in an estimated scour depth of 20.7 feet for the Type 3 ELJs. Appendix B presents the scour calculation formulas, input values, and results.

Large Wood Structural Stability Analysis

The Type 1 and Type 2 habitat structures will be anchored by vertical timber piles and native soil backfill material. Vertical stability of these structures was analyzed by calculating the net force on the structure due to the upward acting buoyant force on the logs when they are submerged and the downward acting force on the logs due to the ballast (soil) overlying the buried portions of those logs. The vertical stability of these habitat structures was calculated as a safety factor expressed as the ratio of the ballast force to the buoyant force of the wood. A safety factor of 1.0 would represent an upward buoyant force equal to the downward ballast force. A safety factor of 1.5 would represent a downward ballast force 50 percent greater than the upward buoyant force that it is counteracting.

The estimated safety factors for the Type 1 and Type 2 habitat structures are 1.9 and 1.7, respectively. In addition to this ballast stability, the upper logs in each of the Type 1 and Type 2 structures will be lashed to the vertical timber piles, providing additional vertical stability. These timber piles will also provide bracing for the structure against horizontal hydraulic forces.

The Type 3 ELJs will also be anchored by a series of vertical timber piles and log ballast material. Stability of these structures is expressed as safety factors as with the Type 1 and Type 2 structures. For the Type 3 structures, the ballast element of the calculation is the backfill material within the log/pile matrix of the ELJ structure. As with the Type 1 and Type 2 structures, additional vertical stability will be provided by lashing the logs to the vertical timber piles but is not reflected in the safety factors below. The estimated safety factor for Type 3 ELJ structures is 1.9.

A safety factor was also calculated separately for the chain connections at the top of the Type 3 ELJ structures by comparing the maximum uplift load of timber piles with the net buoyant force of the wood structure. This safety factor reflects redundant vertical stability for the structures. This stability was evaluated separately because the rock ballast material in the ELJ is critical not only for stability, but also to ensure that voids are not present in the structure, which could lead to a safety hazard for recreational boaters. In addition, lashing of the top logs to piles will not only provide stability to the entire structure, but keep those individual logs from floating away if ballast were to wash off of the top of the structure. An estimated safety factor for pile uplift is 4.1 for the Type 3 ELJ structures. Appendix C presents the detailed buoyancy calculations for large wood structure vertical stability.

Pile Analysis

A geotechnical analysis of pile driving for the ELJs was conducted for both 12-inch steel H-piles and rounded timber piles with a butt (top) diameter of 18 inches and a tip (bottom) diameter of 10 inches. The results of the analyses indicated that the ultimate uplift load will be approximately 40,000 pounds (40 kips) for the timber pile and 50 kips for the steel pile when driven to an embedment of approximately 40 feet (tip at elevation -25). Downward ultimate loads are not expected to govern the design. It should be noted that a soft clay layer was encountered in geotechnical explorations below a depth of about 35 feet in the vicinity of the ELJs, and thus additional pile embedment is not expected to result in substantially increased ultimate loads. The 100 percent design specifies use of timber piles with 16-inch tip diameters which will be easier to drive when compared to the 18-inch tip diameters assumed for the pile driving analysis.

Pile overturning calculations assume the structure fails when the soil supporting the piles fails and the piles overturn. Calculations account for the drag and the soil pressure of the backfill as driving forces. The L-Pile program was used to analyze pile overturning using the parameters presented in Table 2 below. Pile overturning assumes the maximum scour depth (which approximately corresponds with the depth of cohesionless soils), negligible velocities within the scour pool, and a constant maximum velocity through the depth of the water column and across the channel. All pile overturning calculations assumed that the ELJ structures will be subject to the highest modeled flow velocity in the vicinity as well as

the maximum water surface condition in the 100-year flood event. The pile overturning calculations also assumed a homogenous cohesive channel substrate (soft clay, "Matlock") below maximum scour depth that will resist overturning. Minimum embedment was taken as the embedment with a minimum of two points of zero deflection.

Table 2. Soil Parameters For L-Pile Analysis.

Soil Layer No.	Description of Soil Layer	Depth (ft)	Total Unit Weight (pcf)	Friction Angle (degrees)	Cohesion (psf)	Modulus Parameter k (pci)	Strain Parameter e50
1	Soft Clay	35	105	0	300	30	0.02

pcf – pounds per cubic foot

pci – pounds per cubic inch

Note: The soil layers listed above are those assumed to be present at the edge of the Green River at approximate ground surface elevation +15 feet (NAVD 88). The layer numbering system is for this analysis only, and is not intended to parallel the soil stratum numbering system provided in the geotechnical design memorandum for this project (URS 2010).

L-Pile was also used to evaluate the internal stresses (bending and shear) developed within the pile and for selection of the appropriate pile to resist these stresses. 16-inch diameter timber piles were chosen to resist bending and shear stresses within the pile. L-Pile outputs are provided in Appendix C.

The anticipated pile driving behavior was examined using the industry standard WEAP software which employs the wave equation method of pile driving analysis. The analysis indicated that when a timber pile having a top diameter of 18 inches and a tip diameter of 10 inches is driven with a Vulcan 06 hammer having a maximum rated energy of 19,500 foot-pounds, a peak driving resistance of about 25 blows per foot is encountered in the depth range from approximately 30 to 35 feet. The driving resistance then drops off as the pile enters the soft clay layer.

Other Geotechnical Considerations

During the preliminary design phase of the project, the stability of the side channel slopes was examined at slope inclination angles as steep as 2H:1V, and adequate safety factors were obtained for static and seismic loading conditions. For final design, additional subsurface information was obtained from Cone Penetrometer Probe CPT-6, advanced where the channel is now closest to SR 516, to confirm via an updated stability analysis that no risk will be posed to the highway by the presence of the nearby side channel. The additional cone probe encountered subsurface conditions similar to those obtained in the preliminary design phase of the project, which included a zone of potentially liquefiable sand near the bottom of the channel. The stability analyses were performed using SLOPE-W software from Ensoft Inc, and examined stability of the proposed slopes at inclinations of approximately 5H:1V. The analyses checked static conditions, rapid drawdown conditions, and earthquake shaking conditions that included liquefaction and reduction of soil strength to residual values. Adequate factors of safety were obtained in all cases.

REFERENCES

Chase, K.J. and S.R. Holnbeck. 2004. Evaluation of Pier-Scour Equations for Coarse-Bed Streams. USGS Scientific Investigation Report 2004-5111.

Chow, V.T. 1959. Open-Channel Hydraulics. McGraw-Hill, Inc.

Collins, B. and A. Sheikh. 2005. Historical aquatic habitats in the Green and Duwamish river valleys and Elliott Bay nearshore, King County, Washington. Prepared for the King County Department of Natural Resources and Parks, Seattle, Washington.

FHWA. 2001. Hydraulic Engineering Circular 18: Evaluating Scour at Bridges. Fourth Edition. Federal Highway Administration. Publication No. FHWA NHI 01-001, HEC-18.

Geomatrix. 2008a. Phase I and Limited Phase II Environmental Site Assessment. Lower Green River Property Acquisition, Desimone Property, and unincorporated King County, Washington. Prepared for City of Kent by Geomatrix Consultants, Inc., Seattle, Washington.

Geomatrix. 2008b. Phase I and II Environmental Site Assessment. Lower Green River Property Acquisition, King County Property, and unincorporated King County, Washington. Prepared for City of Kent by Geomatrix Consultants, Inc., Seattle, Washington.

Geomatrix. 2008c. Phase I and Limited Phase II Environmental Site Assessment. Lower Green River Property Acquisition, Lotto Property, unincorporated King County, Washington. Prepared for City of Kent by Geomatrix Consultants, Inc., Seattle, Washington.

Herrera and URS. 2011. Preliminary Design Report, Downey Farmstead Restoration. Prepared for City of Kent by Herrera Environmental Consultants, Inc., and URS Corporation, Seattle, Washington. March 2011.

King County. 2012. WRIA 9 Salmon Habitat Plan: Making Our Watershed Fit for a King. Green/Duwamish and Central Puget Sound Watershed, Implementation Progress Report 2005-2011. King County Department of Natural Resources and Parks, Water and Land Resources Division. May 2012. http://www.govlink.org/watersheds/9/plan-implementation/ImplementationProgressReport.aspx.

NHC. 2008. HEC-RAS Model dated February 28, 2008.

Tetra Tech. 2008. Riverview Park Ecosystem Restoration: Design Evaluation Report. Prepared for the City of Kent by Tetra Tech, Inc., Seattle, Washington. June 2008.

URS. 2010. Geotechnical Design Memorandum, Downery Farmstead Project. Prepared by URS Corporation for Herrera Environmental Consultants, Inc., Seattle, Washington. June 8, 2010.

USACE. 2012. Assembly of Design Flood Hydrographs for the Green River Basin; Summary Report for Flood Plain Management Services Program. US Department of the Army, Corps of Engineers, Seattle District. September 2012.

APPENDIX A

100 Percent Design Plans

SW 1/4 SEC. 23, T. 22N, R. 4E., W.M.

SE 1/4 SEC. 23, T. 22N, R. 4E., W.M.

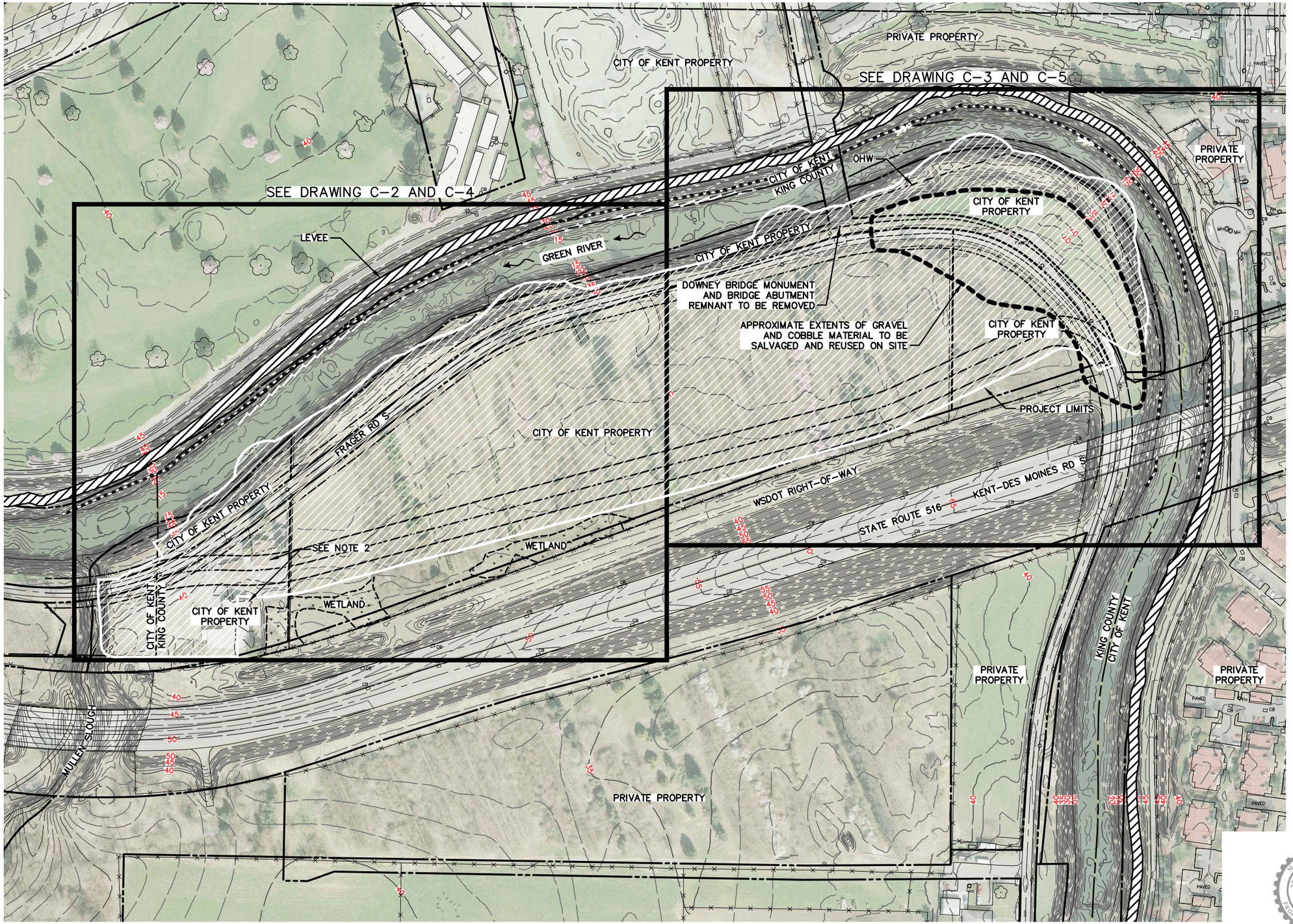

100 0 100 200
1"=100'

NOTES:

1. SITE ELEVATION DATA WAS PROVIDED BY CITY OF KENT, 4/2010. BATHYMETRIC DATA WAS SURVEYED BY PGS 2/2010. AERIAL PHOTO IS FROM 2009 AND PROVIDED BY THE CITY OF KENT.
2. ALL BUILDINGS AND SUBSTRUCTURES HAVE BEEN REMOVED FROM THE PROJECT AREA.

2200 Sixth Avenue
Suite 1100
Seattle, Washington
98121-1820
206-441-9080
206-441-9108 FAX
HERRERA
http://www.herrerainc.com

NO.	REVISION	BY	DATE

DESIGNED: M.B. | CHECKED: M.E. | KENT PROJECT NO. 08-3017 | SCALE: HORIZ: NOTED
DRAWN: R.H. | PROJECT ENGR: M.E. | CONST. MGT. REVIEW | VERT:
APPROVED: _____ CITY ENGINEER | DATE MAR 2013

BAR IS ONE INCH ON ORIGINAL DRAWING ADJUST SCALES ACCORDINGLY
0" 1"

City of Kent
Public Works Department
Engineering Division

EXISTING SITE PLAN AND KEY MAP

DOWNEY FARMSTEAD RESTORATION

SHEET C-1 OF 29
FILE NO. 0187C01

Path: P:\Proj\Y2011\11-05022-000 Downey Farmstead\CAD\Dwgs\0187C01.dwg
Plot Date: 11/8/2013 1:21 PM Cad User: Richmond Hulme
Plot Style Table: Newkenthalf.ctb Plotter: DWG To PDF.pc3

SW 1/4 SEC. 23, T. 22N, R. 4E., W.M.

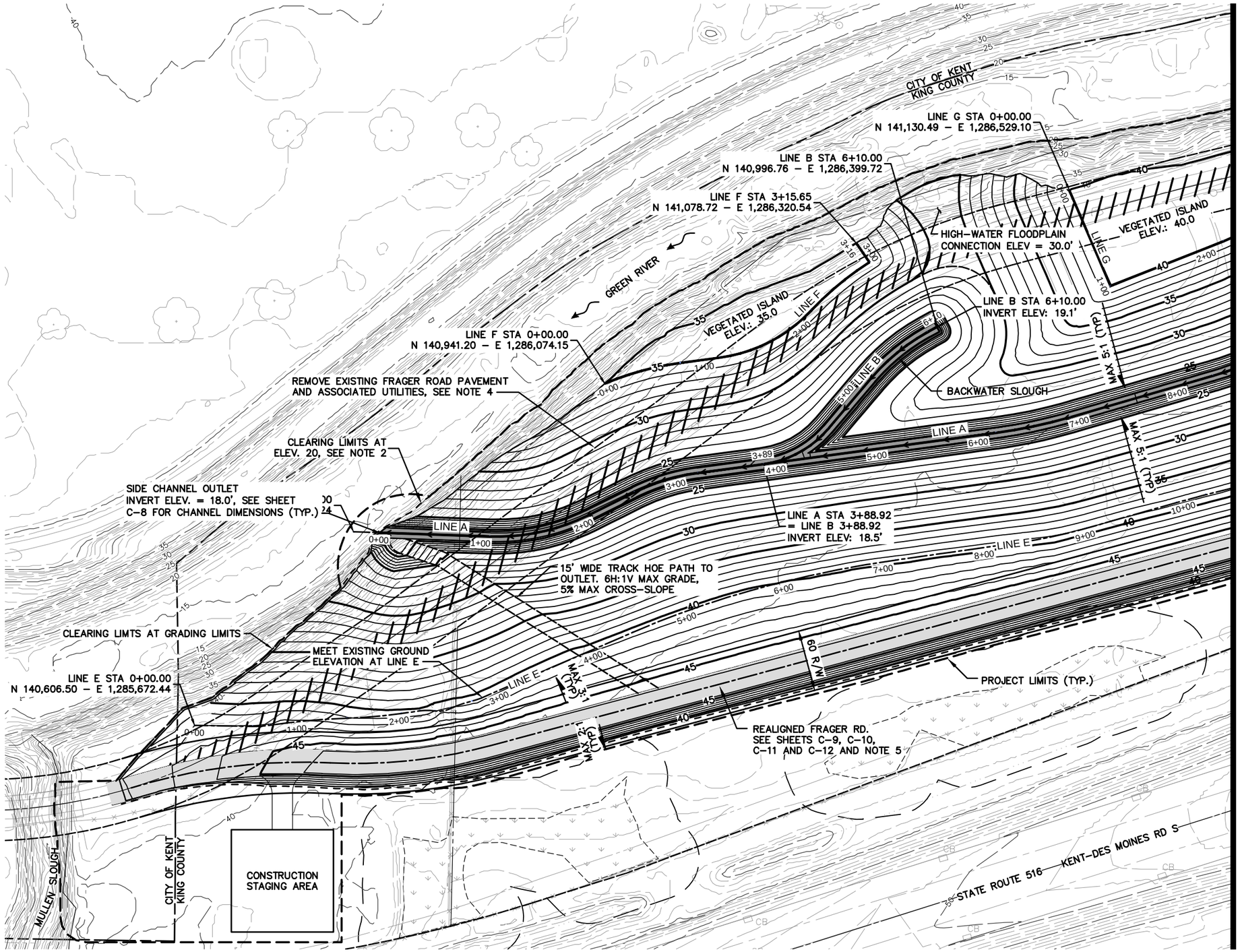

50 0 50 100
1"=50'

N

GRADING NOTES:

1. SEE SHEET C-6 FOR STATIONING LINE LAYOUT DATA.
2. CONTRACTOR SHALL CLEAR AND GRUB TO CLEARING LIMITS EXCEPT WHERE VEGETATION TO BE PRESERVED HAS BEEN FLAGGED BY THE OWNER.
3. CONTRACTOR SHALL SEPARATE AND STOCKPILE GRAVEL AND COBBLE FROM SUBSURFACE AT EAST END OF SITE (SEE SHEET C-1) FOR USE AS BACKFILL OF SIDE CHANNEL INLET ENGINEERED LOG JAMS, TYPE 3. STOCKPILE LOCATION TO BE APPROVED BY THE ENGINEER.
4. CENTURY LINK AND PUGET SOUND ENERGY SHALL REMOVE AND RELOCATE THEIR RESPECTIVE TELEPHONE AND POWER UTILITIES, TO BE COORDINATED BY THE OWNER.
5. CONTRACTOR SHALL ESTABLISH TEMPORARY DRIVING SURFACE FOR REALIGNED FRAGER ROAD FOR USE BY CONTRACTOR'S VEHICLES AND EQUIPMENT, AND BY THE GENERAL PUBLIC. TEMPORARY ROADWAY SURFACE SHALL BE IN PLACE PRIOR TO REMOVAL OF ANY EXISTING FRAGER ROAD PAVEMENT. THIS TEMPORARY ROADWAY SHALL BE MAINTAINED THROUGHOUT DURATION OF CONSTRUCTION UNTIL PERMANENT FRAGER ROAD SURFACING OCCURS. SEE SHEET C-11 FOR DETAIL OF PERMANENT FRAGER ROAD SURFACING.
6. 100-YEAR FLOOD ELEV. = 43 FT.

HERRERA
2200 Sixth Avenue
Suite 1100
Seattle, Washington
98121-1820
206-441-9080
206-441-9108 FAX
http://www.herrerainc.com

NO.	REVISION	BY	DATE

DESIGNED: M.B. | CHECKED: M.E. | KENT PROJECT NO. 08-3017 | SCALE: HORIZ: NOTED
DRAWN: R.H. | PROJECT ENGR: M.E. | CONST. MGMT. REVIEW | VERT:
APPROVED: CITY ENGINEER | DATE MAR 2013

BAR IS ONE INCH ON ORIGINAL DRAWING ADJUST SCALES ACCORDINGLY 0" 1"

City of Kent
Public Works Department
Engineering Division

GRADING PLAN – WEST

DOWNEY FARMSTEAD RESTORATION

SHEET C-2 OF 29
FILE NO. 0817C02

Path: P:\Proj\Y2011\11-05022-000 Downey Farmstead\CAD\Dwgs\0817C02.dwg
Plot Date: 11/8/2013 1:21 PM Cad User: Richmond Hulme
Plot Style Table: Newkenthalf.ctb Plotter: DWG To PDF.pc3

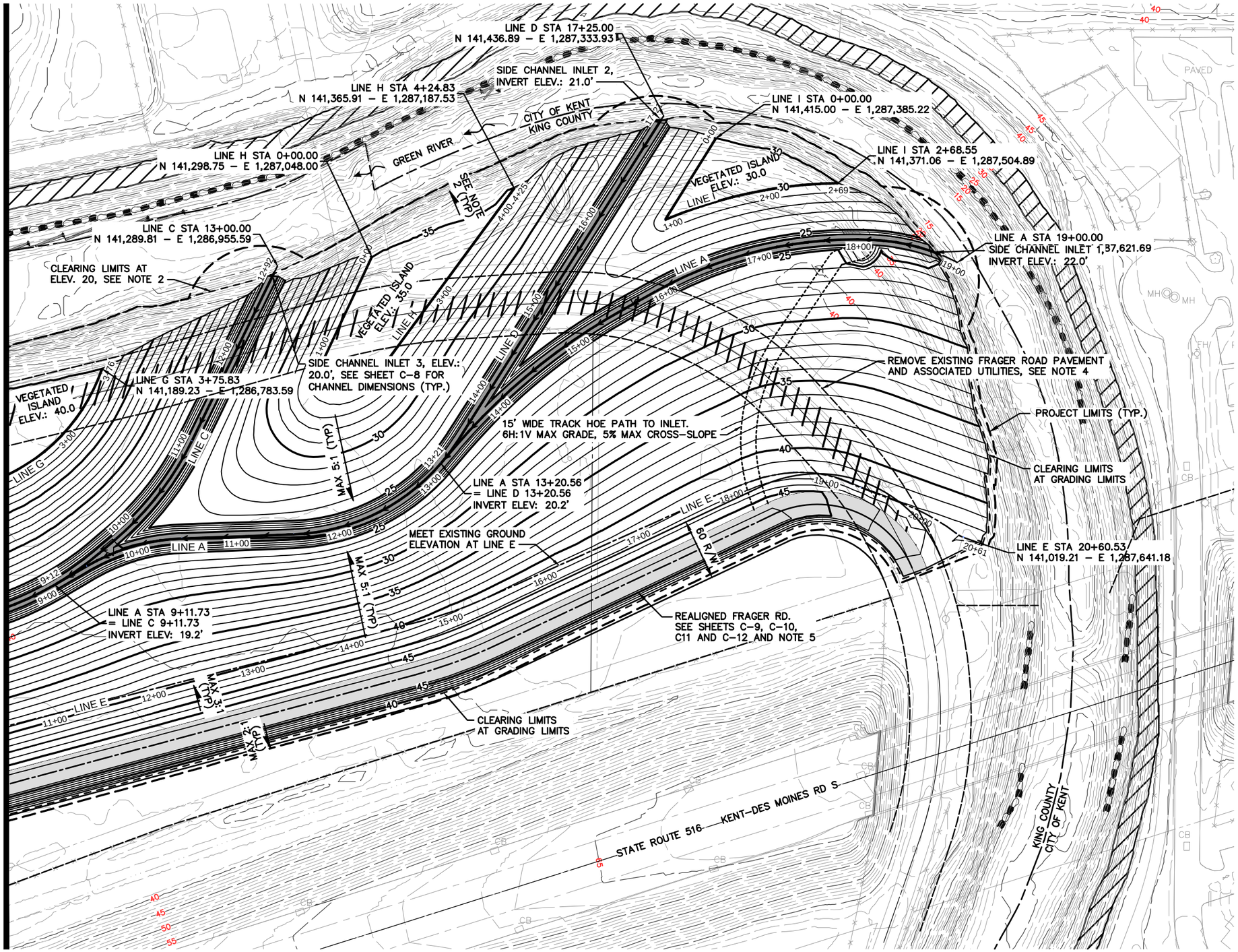

50 0 50 100
1"=50'

GRADING NOTES:

1. SEE SHEET C–6 FOR STATIONING LINE LAYOUT DATA.
2. CONTRACTOR SHALL CLEAR AND GRUB TO CLEARING LIMITS EXCEPT WHERE VEGETATION TO BE PRESERVED HAS BEEN FLAGGED BY THE OWNER.
3. CONTRACTOR SHALL SEPARATE AND STOCKPILE GRAVEL AND COBBLE FROM SUBSURFACE AT EAST END OF SITE (SEE SHEET C–1) FOR USE AS BACKFILL OF SIDE CHANNEL INLET ENGINEERED LOG JAMS, TYPE 3. STOCKPILE LOCATION TO BE APPROVED BY THE ENGINEER.
4. CENTURY LINK AND PUGET SOUND ENERGY SHALL REMOVE AND RELOCATE THEIR RESPECTIVE TELEPHONE AND POWER UTILITIES, TO BE COORDINATED BY THE OWNER.
5. CONTRACTOR SHALL ESTABLISH TEMPORARY DRIVING SURFACE FOR REALIGNED FRAGER ROAD FOR USE BY CONTRACTOR'S VEHICLES AND EQUIPMENT, AND BY THE GENERAL PUBLIC. TEMPORARY ROADWAY SURFACE SHALL BE IN PLACE PRIOR TO REMOVAL OF ANY EXISTING FRAGER ROAD PAVEMENT. THIS TEMPORARY ROADWAY SHALL BE MAINTAINED THROUGHOUT DURATION OF CONSTRUCTION UNTIL PERMANENT FRAGER ROAD SURFACING OCCURS. SEE SHEET C–11 FOR DETAIL OF PERMANENT FRAGER ROAD SURFACING.
6. 100–YEAR FLOOD ELEV. = 43 FT.

HERRERA
2200 Sixth Avenue
Suite 1100
Seattle, Washington
98121-1820
206-441-9080
206-441-9108 FAX
http://www.herrerainc.com

NO.	REVISION	BY	DATE

DESIGNED: M.B. | CHECKED: M.E. | KENT PROJECT NO. 08–3017 | SCALE: HORIZ: NOTED
DRAWN: R.H. | PROJECT ENGR: M.E. | CONST. MGMT. REVIEW | VERT:
APPROVED: CITY ENGINEER | DATE MAR 2013

BAR IS ONE INCH ON ORIGINAL DRAWING ADJUST SCALES ACCORDINGLY
0" 1"

KENT WASHINGTON
City of Kent
Public Works Department
Engineering Division

GRADING PLAN – EAST

DOWNEY FARMSTEAD RESTORATION

SHEET C–3 OF 29
FILE NO. 0817C03

Path: P:\Proj\Y2011\11-05022-000 Downey Farmstead\CAD\Dwgs\0817C03.dwg
Plot Date:11/8/2013 1:22 PM Cad User:Richmond Hulme
Plot Style Table:Newkenthalf.ctb Plotter:DWG To PDF.pc3

SW 1/4 SEC. 23, T. 22N, R. 4E., W.M.

SE 1/4 SEC. 23, T. 22N, R. 4E., W.M.

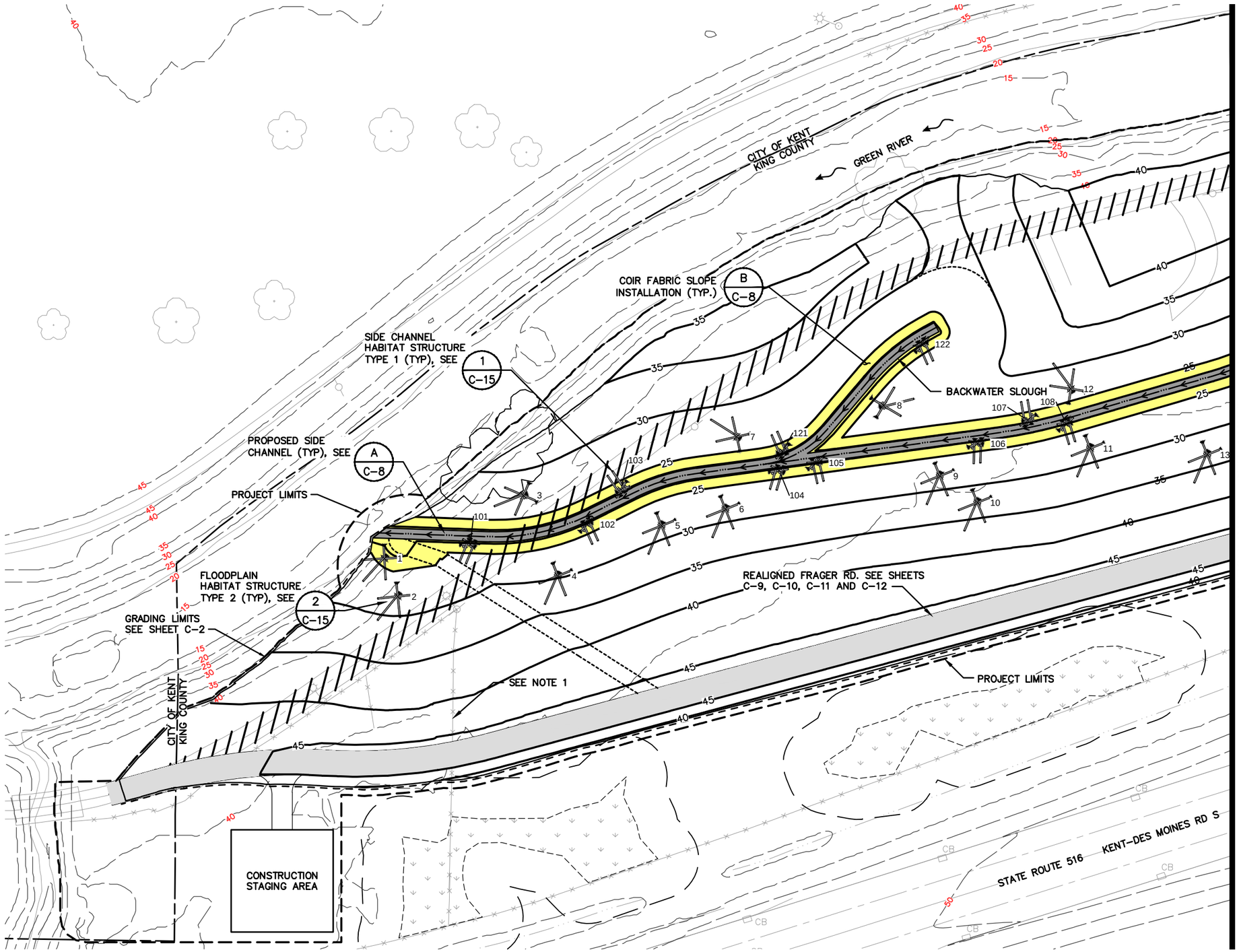

50 0 50 100
1"=50'

SITEWORK PLAN NOTES:

1. CONTRACTOR SHALL REMOVE ALL EXISTING MANMADE FEATURES FROM WITHIN THE PROJECT SITE, SUCH AS, BUT NOT LIMITED TO: FENCES, REMAINING SUBSTRUCTURES, GRAVEL, PAVEMENT, AND WASTE DEBRIS.

LEGEND:

10 FLOODPLAIN HABITAT STRUCTURE SEE CONTROL POINTS TABLE ON SHEET C-7

114 CHANNEL HABITAT STRUCTURE SEE CONTROL POINTS TABLE ON SHEET C-7

2200 Sixth Avenue
Suite 1100
Seattle, Washington
98121-1820
206-441-9080
206-441-9108 FAX
HERRERA
http://www.herrerainc.com

NO.	REVISION	BY	DATE

DESIGNED: M.B. CHECKED: M.E. KENT PROJECT NO. 08-3017 SCALE: HORIZ: NOTED
DRAWN: R.H. PROJECT ENGR: M.E. CONST. MGMT. REVIEW VERT:
APPROVED: CITY ENGINEER DATE MAR 2013
BAR IS ONE INCH ON ORIGINAL DRAWING ADJUST SCALES ACCORDINGLY 0" 1"

City of Kent
Public Works Department
Engineering Division

SITE HABITAT IMPROVEMENT PLAN - WEST

DOWNEY FARMSTEAD RESTORATION

SHEET C-4 OF 29
FILE NO. 0817C04

Path: P:\Proj\Y2011\11-05022-000 Downey Farmstead\CAD\Dwgs\0817C04.dwg
Plot Date: 11/8/2013 1:22 PM Cad User: Richmond Hulme
Plot Style Table: Newkenthalf.ctb Plotter: DWG To PDF.pc3

SW 1/4 SEC. 23, T. 22N, R. 4E., W.M.

SE 1/4 SEC. 23, T. 22N, R. 4E., W.M.

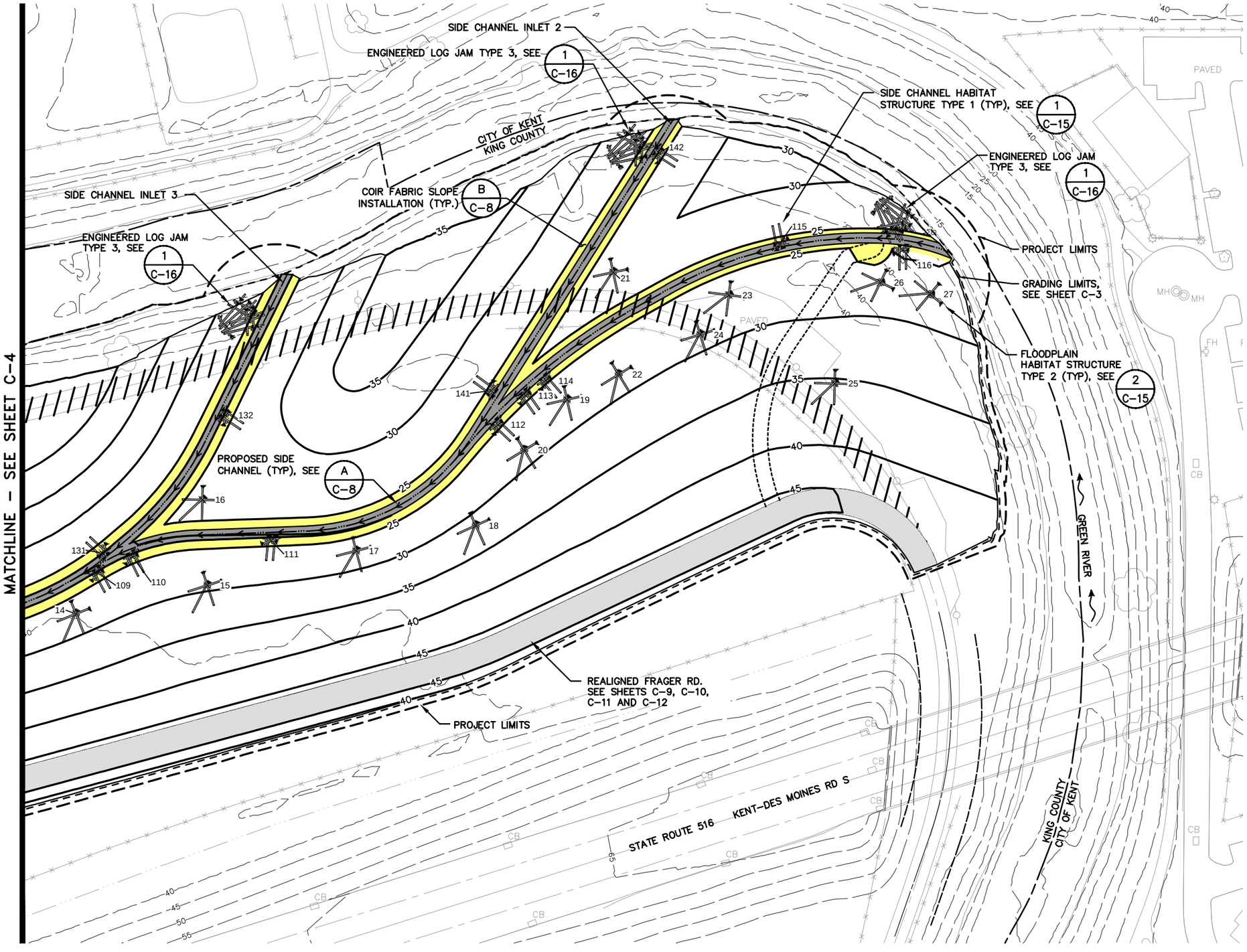

50 0 50 100
1"=50'

SITEWORK PLAN NOTES:

1. CONTRACTOR SHALL REMOVE ALL EXISTING MANMADE FEATURES FROM WITHIN THE PROJECT SITE, SUCH AS, BUT NOT LIMITED TO: FENCES, REMAINING SUBSTRUCTURES, GRAVEL, PAVEMENT, AND WASTE DEBRIS.

LEGEND:

10 FLOODPLAIN HABITAT STRUCTURE SEE CONTROL POINTS TABLE ON SHEET C-7

114 CHANNEL HABITAT STRUCTURE SEE CONTROL POINTS TABLE ON SHEET C-7

SIDE CHANNEL INLET ENGINEERED LOG JAM SEE CONTROL POINTS TABLE ON SHEET C-7

2200 Sixth Avenue
Suite 1100
Seattle, Washington
98121-1820
206-441-9080
206-441-9108 FAX
HERRERA
http://www.herrerainc.com

NO.	REVISION	BY	DATE

DESIGNED: M.B. CHECKED: M.E. KENT PROJECT NO. 08-3017 SCALE: HORIZ: NOTED
DRAWN: R.H. PROJECT ENGR: M.E. CONST. MGMT. REVIEW VERT:
APPROVED: CITY ENGINEER DATE MAR 2013

BAR IS ONE INCH ON ORIGINAL DRAWING ADJUST SCALES ACCORDINGLY 0" 1"

KENT WASHINGTON

City of Kent
Public Works Department
Engineering Division

SITE HABITAT IMPROVEMENT PLAN – EAST

DOWNEY FARMSTEAD RESTORATION

SHEET C-5 OF 29

FILE NO. 0817C05

Path: P:\Proj\Y2011\11-05022-000 Downey Farmstead\CAD\Dwgs\0817C05.dwg
Plot Date: 11/8/2013 1:22 PM Cad User: Richmond Hulme
Plot Style Table: Newkenthalf.ctb Plotter: DWG To PDF.pc3

LINE A							
NUMBER	DIRECTION	LENGTH	RADIUS	TANGENT	DELTA	START STATION	END STATION
L1	S87° 59' 36"E	133.73'				-0+25.00	1+08.73
C1		98.90'	200.00'	50.48'	28° 19' 59"	1+08.73	2+07.63
L2	N63° 40' 24"E	50.95'				2+07.63	2+58.58
C2		65.16'	200.00'	32.87'	18° 40' 01"	2+58.58	3+23.74
L3	N82° 20' 26"E	294.57'				3+23.74	6+18.30
C3		74.23'	500.00'	37.18'	8° 30' 22"	6+18.30	6+92.53
L4	N73° 50' 03"E	145.87'				6+92.53	8+38.41
C4		73.32'	300.00'	36.84'	14° 00' 13"	8+38.41	9+11.73
L5	N59° 51' 22"E	36.70'				9+11.73	9+48.43
C5		97.74'	200.00'	49.87'	28° 00' 03"	9+48.43	10+46.17
L6	N87° 51' 25"E	109.65'				10+46.17	11+55.82
C6		164.74'	200.00'	87.37'	47° 11' 43"	11+55.82	13+20.56
L7	N40° 39' 41"E	22.38'				13+20.56	13+42.94
C7		211.24'	600.00'	106.72'	20° 10' 18"	13+42.94	15+54.18
L8	N60° 50' 00"E	38.14'				15+54.18	15+92.32
C8		221.22'	400.00'	113.52'	31° 41' 17"	15+92.32	18+13.54
C9		86.46'	200.00'	43.91'	24° 46' 04"	18+13.54	19+00.00

LOCATION: SHEETS C-2 & C-3

LINE B							
NUMBER	DIRECTION	LENGTH	RADIUS	TANGENT	DELTA	START STATION	END STATION
C13		73.28'	100.00'	38.37'	41° 59' 18"	3+88.92	4+62.20
L9	N40° 21' 08"E	64.89'				4+62.20	5+27.09
C14		72.17'	200.00'	36.48'	20° 40' 29"	5+27.09	5+99.26
L10	N61° 01' 37"E	10.74'				5+99.26	6+10.00

LOCATION: SHEET C-2

LINE C							
NUMBER	DIRECTION	LENGTH	RADIUS	TANGENT	DELTA	START STATION	END STATION
C16		53.88'	300.00'	27.01'	10° 17' 24"	9+11.73	9+65.61
L11	N49° 32' 27"E	20.80'				9+65.61	9+86.40
C17		122.70'	300.00'	62.22'	23° 26' 05"	9+86.40	11+09.11
L12	N26° 06' 22"E	190.89'				11+09.11	13+00.00

LOCATION: SHEET C-3

LINE D							
NUMBER	DIRECTION	LENGTH	RADIUS	TANGENT	DELTA	START STATION	END STATION
C18		28.91'	200.00'	14.48'	8° 16' 59"	13+20.56	13+49.47
L13	N32° 22' 43"E	375.53'				13+49.47	17+25.00

LOCATION: SHEET C-3

LINE E							
NUMBER	DIRECTION	LENGTH	RADIUS	TANGENT	DELTA	START STATION	END STATION
L31	S88° 58' 09"E	56.91'				0+00.00	0+56.91
C31		16.74'	100.00'	8.39'	9° 35' 29"	0+56.91	0+73.65
C32		75.82'	650.00'	37.95'	6° 41' 01"	0+73.65	1+49.47
C33		53.60'	500.00'	26.83'	6° 08' 32"	1+49.47	2+03.07
L32	N81° 58' 51"E	18.58'				2+03.07	2+21.66
C34		14.76'	50.00'	7.43'	16° 54' 34"	2+21.66	2+36.41
C35		15.14'	25.00'	7.81'	34° 42' 26"	2+36.41	2+51.56
C36		22.78'	100.00'	11.44'	13° 03' 15"	2+51.56	2+74.34
C37		9.31'	50.00'	4.67'	10° 40' 12"	2+74.34	2+83.65
L33	N66° 34' 03"E	162.05'				2+83.65	4+45.71
C38		122.93'	900.00'	61.56'	7° 49' 35"	4+45.71	5+68.64
C39		144.45'	1100.00'	72.33'	7° 31' 27"	5+68.64	7+13.09
L34	N81° 55' 04"E	121.87'				7+13.09	8+34.97
C40		68.19'	500.00'	34.15'	7° 48' 49"	8+34.97	9+03.15
L35	N74° 06' 16"E	91.51'				9+03.15	9+94.66
C41		29.66'	1000.00'	14.83'	1° 41' 58"	9+94.66	10+24.32
L36	N75° 48' 14"E	443.50'				10+24.32	14+67.81
C42		69.37'	400.00'	34.77'	9° 56' 13"	14+67.81	15+37.19
L37	N65° 52' 01"E	238.96'				15+37.19	17+76.15
C43		47.26'	600.00'	23.64'	4° 30' 45"	17+76.15	18+23.40
C44		42.23'	150.00'	21.25'	16° 07' 48"	18+23.40	18+65.63
C45		56.59'	115.00'	28.88'	28° 11' 37"	18+65.63	19+22.22
C46		12.02'	175.00'	6.01'	3° 56' 12"	19+22.22	19+34.24
L38	S69° 14' 01"E	44.51'				19+34.24	19+78.75
C47		59.50'	200.00'	29.97'	17° 02' 48"	19+78.75	20+38.26
C48		7.94'	25.00'	4.00'	18° 11' 51"	20+38.26	20+46.20
L39	S70° 23' 05"E	14.33'				20+46.20	20+60.53

LOCATION: SHEETS C-2 & C-3

LINE F							
NUMBER	DIRECTION	LENGTH	RADIUS	TANGENT	DELTA	START STATION	END STATION
C19		76.70'	292.67'	38.57'	15° 00' 54"	-0+00.00	0+76.70
L14	N82° 16' 18"E	39.52'				0+76.70	1+16.22
C20		102.81'	150.00'	53.52'	39° 16' 16"	1+16.22	2+19.03
C21		73.89'	287.91'	37.15'	14° 42' 18"	2+19.03	2+92.93
L15	N34° 23' 34"W	22.73'				2+92.93	3+15.65

LOCATION: SHEET C-2

LINE G							
NUMBER	DIRECTION	LENGTH	RADIUS	TANGENT	DELTA	START STATION	END STATION
L16	S23° 18' 46"E	101.99'				0+00.00	1+01.99
L17	N68° 26' 45"E	118.82'				1+01.99	2+20.82
C23		155.02'	178.85'	82.76'	49° 39' 42"	2+20.82	3+75.83

LOCATION: SHEETS C-2 & C-3

LINE H							
NUMBER	DIRECTION	LENGTH	RADIUS	TANGENT	DELTA	START STATION	END STATION
L18	S25° 12' 05"W	116.61'				0+00.00	1+16.61
C24		47.61'	20.00'	50.01'	136° 24' 22"	1+16.61	1+64.23
C25		48.03'	85.00'	24.68'	32° 22' 41"	1+64.23	2+12.26
L19	N36° 25' 02"E	212.56'				2+12.26	4+24.83

LOCATION: SHEETS C-2 & C-3

LINE I							
NUMBER	DIRECTION	LENGTH	RADIUS	TANGENT	DELTA	START STATION	END STATION
L20	S31° 58' 37"W	94.17'				0+00.00	0+94.17
C26		174.38'	455.00'	88.27'	21° 57' 30"	0+94.17	2+68.55

LOCATION: SHEETS C-2 & C-3

HERRERA
2200 Sixth Avenue
Suite 1100
Seattle, Washington
98121-1820
206-441-9080
206-441-9108 FAX
http://www.herrerainc.com

NO.	REVISION	BY	DATE

DESIGNED: M.B. | CHECKED: M.E. | KENT PROJECT NO. 08-3017 | SCALE: HORIZ: NOTED
DRAWN: R.H. | PROJECT ENGR: M.E. | CONST. MGMT. REVIEW | VERT:
APPROVED: _____ CITY ENGINEER | DATE MAR 2013

BAR IS ONE INCH ON ORIGINAL DRAWING ADJUST SCALES ACCORDINGLY 0" 1"

City of Kent
Public Works Department
Engineering Division

GRADING CONTROL POINT TABLES

DOWNEY FARMSTEAD RESTORATION

SHEET C-6 OF 29
FILE NO. 0817C06

Path: P:\Proj\Y2011\11-05022-000 Downey Farmstead\CAD\Dwgs\0817C06.dwg
Plot Date: 11/8/2013 1:22 PM Cad User: Richmond Hulme
Plot Style Table: Newkenthalf.ctb Plotter: DWG To PDF.pc3

SIDE CHANNEL ENGINEERED LOG JAM TYPE 3 STRUCTURE CONTROL POINTS TABLE

STRUCTURE # - CONTROL POINT	NORTHING	EASTING
INLET #1-A	141325.7	1287555.9
INLET #1-B	141347.2	1287537.9
INLET #2-A	141410.0	1287298.8
INLET #2-B	141396.2	1287274.4
INLET #3-A	141243.2	1286915.2
INLET #3-B	141228.5	1286891.4

LOCATION: SHEET C-5
REFERENCED: SHEETS C-16 & C-17

FLOODPLAIN HABITAT STRUCTURE TYPE 2 CONTROL POINTS TABLE

STRUCTURE #	NORTHING	EASTING
1	140770.1	1285858.7
2	140733.0	1285871.8
3	140831.9	1285995.0
4	140753.1	1286028.7
5	140802.3	1286130.3
6	140818.5	1286192.9
7	140889.4	1286204.0
8	140920.0	1286347.9
9	140851.0	1286403.0
10	140824.9	1286439.8
11	140878.1	1286550.4
12	140936.3	1286531.5
13	140872.0	1286665.1
14	140945.3	1286742.7
15	140973.4	1286872.1
16	141057.7	1286867.2
17	141007.5	1287018.8
18	141032.4	1287136.7
19	141156.5	1287226.5
20	141106.6	1287184.4
21	141281.9	1287272.0
22	141181.3	1287277.5
23	141259.5	1287386.0
24	141220.6	1287357.8
25	141172.3	1287490.3
26	141272.1	1287535.4
27	141260.5	1287584.4

LOCATION: SHEETS C-4 & C-5
REFERENCED: SHEETS C-15

SIDE CHANNEL HABITAT STRUCTURE TYPE 1 CONTROL POINTS TABLE

STRUCTURE #	STATION, LINE	OFFSET AND SIDE (LOOKING UPSTATION)
101	0+90.0 LINE A	8.1 RT.
102	2+03.9 LINE A	7.4 RT.
103	2+48.5 LINE A	8.3 LT.
104	4+03.6 LINE A	7.9 RT.
105	4+40.5 LINE A	5.4 RT.
106	6+00.0 LINE A	7.6 RT.
107	6+52.2 LINE A	7.2 LT.
108	6+88.2 LINE A	5.1 RT.
109	9+39.5 LINE A	6.6 RT.
110	9+77.9 LINE A	7.6 RT.
111	11+19.3 LINE A	8.2 RT.
112	13+75.5 LINE A	8.6 RT.
113	14+15.8 LINE A	6.9 RT.
114	14+40.9 LINE A	9.0 RT.
115	17+11.0 LINE A	3.0 LT.
116	18+33.7 LINE A	9.6 RT.
121	4+11.2 LINE B	7.9 LT.
122	5+89.3 LINE B	7.8 RT.
131	9+54.0 LINE C	5.1 LT.
132	11+37.5 LINE C	6.6 RT.
141	13+98.2 LINE D	8.3 LT.
142	16+84.5 LINE D	6.3 RT.

LOCATION: SHEETS C-4 & C-5
REFERENCED: SHEETS C-15

MARK EWBANK STATE OF WASHINGTON 29436 REGISTERED PROFESSIONAL ENGINEER

HERRERA

2200 Sixth Avenue
Suite 1100
Seattle, Washington
98121-1820
206-441-9080
206-441-9108 FAX
http://www.herrerainc.com

Path: P:\Proj\Y2011\11-05022-000 Downey Farmstead\CAD\Dwgs\0817C07.dwg
Plot Date: 11/8/2013 1:23 PM Cad User: Richmond Hulme
Plot Style Table: Newkenthalf.ctb Plotter: DWG To PDF.pc3

NO.	REVISION	BY	DATE

DESIGNED: M.B. | CHECKED: M.E. | KENT PROJECT NO. 08-3017
DRAWN: R.H. | PROJECT ENGR: M.E. | CONST. MGMT. REVIEW
APPROVED: _____ CITY ENGINEER
SCALE: HORIZ: NOTED VERT: _____
DATE MAR 2013
BAR IS ONE INCH ON ORIGINAL DRAWING ADJUST SCALES ACCORDINGLY 0" 1"

KENT WASHINGTON
City of Kent
Public Works Department
Engineering Division

HABITAT STRUCTURE CONTROL POINT TABLES

DOWNEY FARMSTEAD RESTORATION

SHEET C-7 OF 29
FILE NO. 0817C07

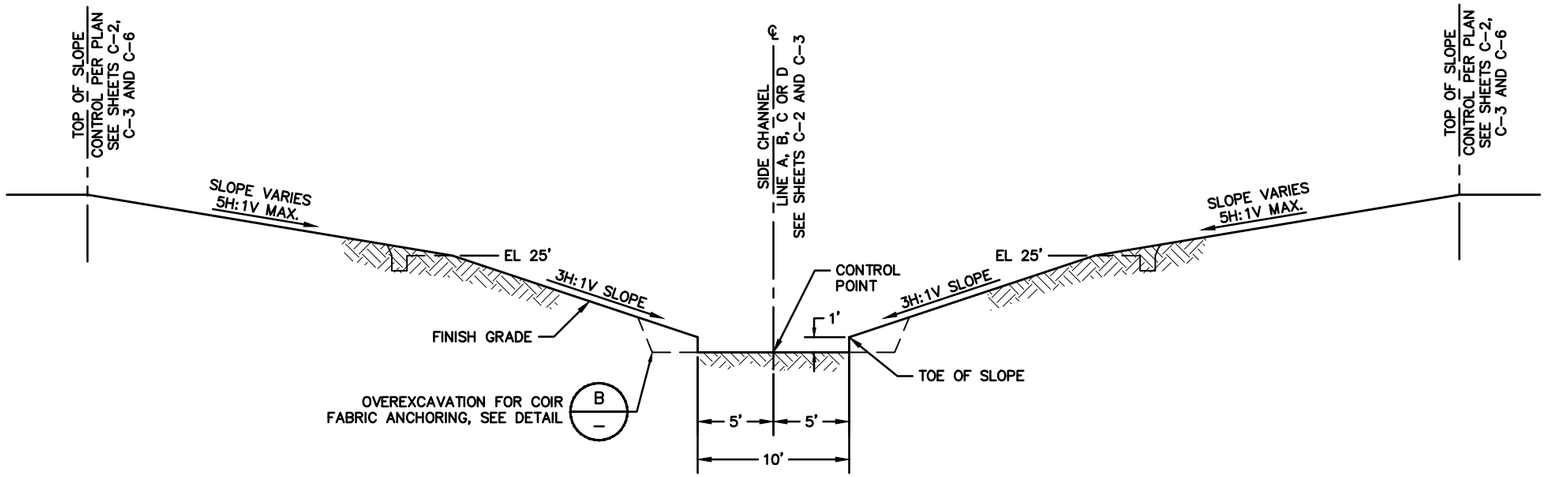

TYPICAL SECTION – SIDE CHANNEL GRADING

SCALE: NONE

A
C-3, C-4

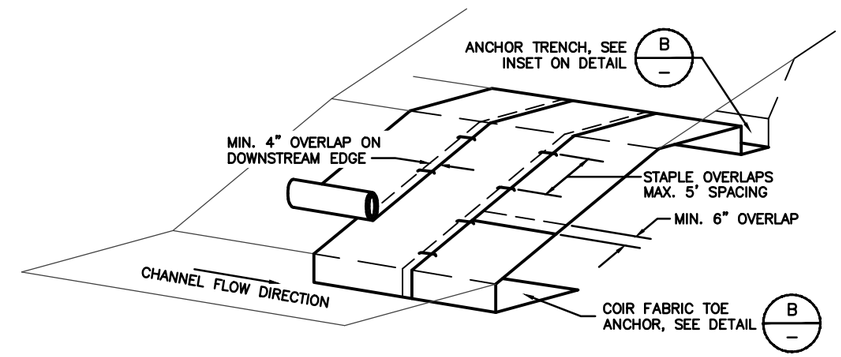

NOTES:

1. SEE SPECIFICATION FOR MATERIAL HANDLING, SLOPE SURFACE PREPARATION AND OTHER DETAILS.
2. COIR FABRIC SHALL BE INSTALLED AND APPROVED BY THE ENGINEER PRIOR TO PLANTING.
3. ALL SEEDING SHALL OCCUR PRIOR TO COIR FABRIC PLACEMENT.

DETAIL – COIR FABRIC SLOPE STABILIZATION INSTALLATION

SCALE: NONE

1

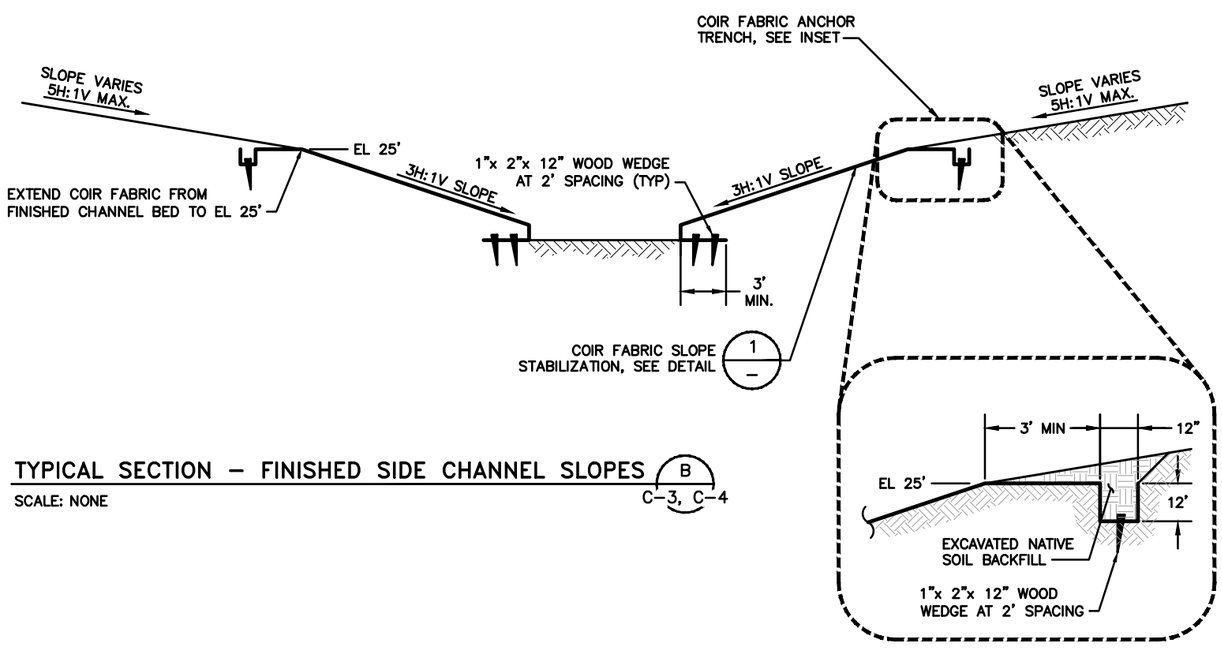

TYPICAL SECTION – FINISHED SIDE CHANNEL SLOPES

SCALE: NONE

B
C-3, C-4

2200 Sixth Avenue
Suite 1100
Seattle, Washington
98121-1820
206-441-9080
206-441-9108 FAX
HERRERA
http://www.herrerainc.com

NO.	REVISION	BY	DATE

DESIGNED: M.B. | CHECKED: M.E. | KENT PROJECT NO. 08-3017
DRAWN: R.H. | PROJECT ENGR: M.E. | CONST. MGMT. REVIEW
APPROVED: _____ CITY ENGINEER
SCALE: HORIZ: NOTED VERT: _____
DATE MAR 2013
BAR IS ONE INCH ON ORIGINAL DRAWING ADJUST SCALES ACCORDINGLY 0" 1"

City of Kent
Public Works Department
Engineering Division

SIDE CHANNEL CROSS-SECTIONS AND BANK SLOPE STABILIZATION

DOWNEY FARMSTEAD RESTORATION

SHEET C-8 OF 29
FILE NO. 0817C08

Path: P:\Proj\Y2011\11-05022-000 Downey Farmstead\CAD\Dwgs\0817C08.dwg
Plot Date: 11/8/2013 1:23 PM Cad User: Richmond Hulme
Plot Style Table: Newkenthalf.ctb Plotter: DWG To PDF.pc3

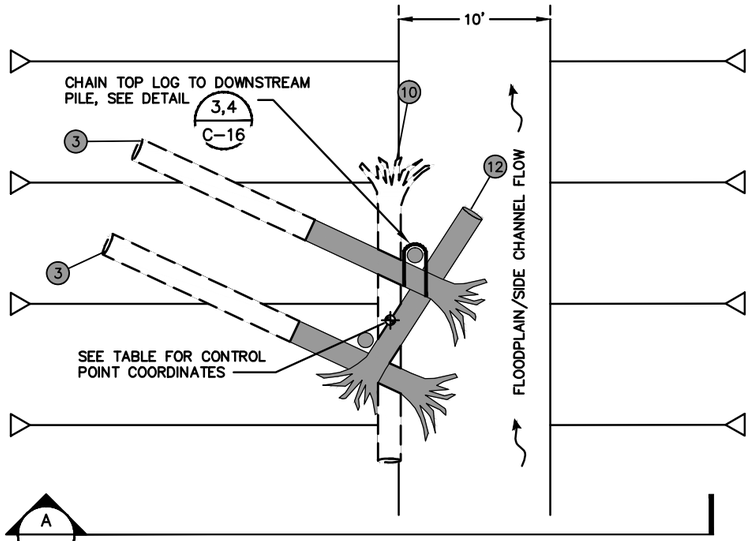

PLAN – SIDE CHANNEL HABITAT STRUCTURE, TYPE 1 (1 / C-4, C-5)

SCALE: 1"=5'

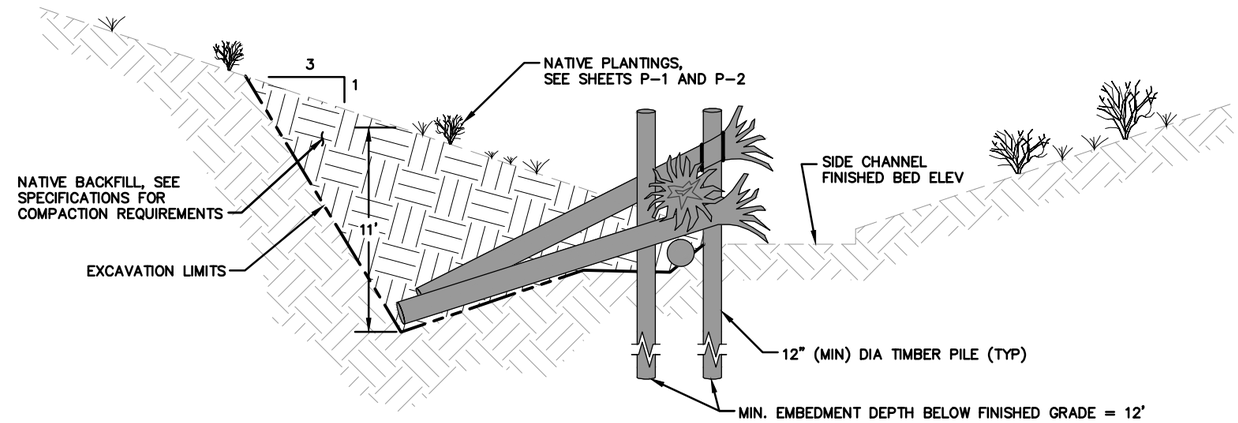

SECTION – SIDE CHANNEL HABITAT STRUCTURE, TYPE 1 (A / –)

SCALE: 1"=5'

5 0 5 10
1"=5'

SIDE CHANNEL HABITAT STRUCTURE TYPE 1 LOG SCHEDULE:

LOG #	DIAMETER (IN)	LENGTH (FT)	ROOTWAD	QUANTITY/STRUCTURE
3	18	25	YES	2
10	18	20	YES	1
12	18	15	YES	1
PILES	12	30	NO	2

TOTAL: 6 PER STRUCTURE

FLOODPLAIN HABITAT STRUCTURE TYPE 2 LOG SCHEDULE:

LOG #	DIAMETER (IN)	LENGTH (FT)	ROOTWAD	QUANTITY/STRUCTURE
6	18	35	YES	3
PILES	12	30	NO	2

TOTAL: 8 PER STRUCTURE

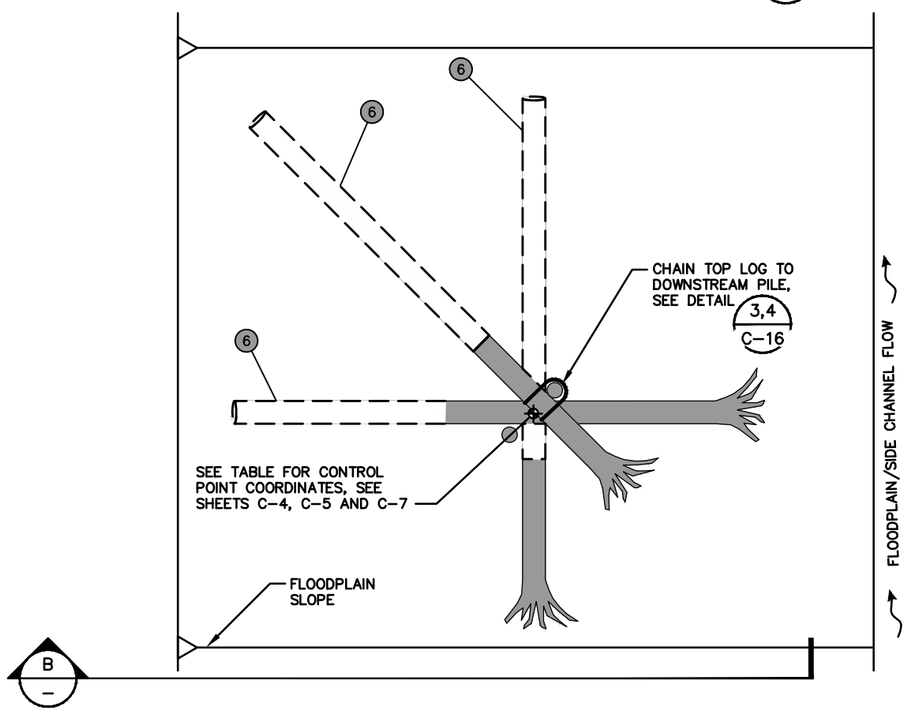

PLAN – FLOODPLAIN HABITAT STRUCTURE, TYPE 2 (2 / C-4, C-5)

SCALE: 1"=5'

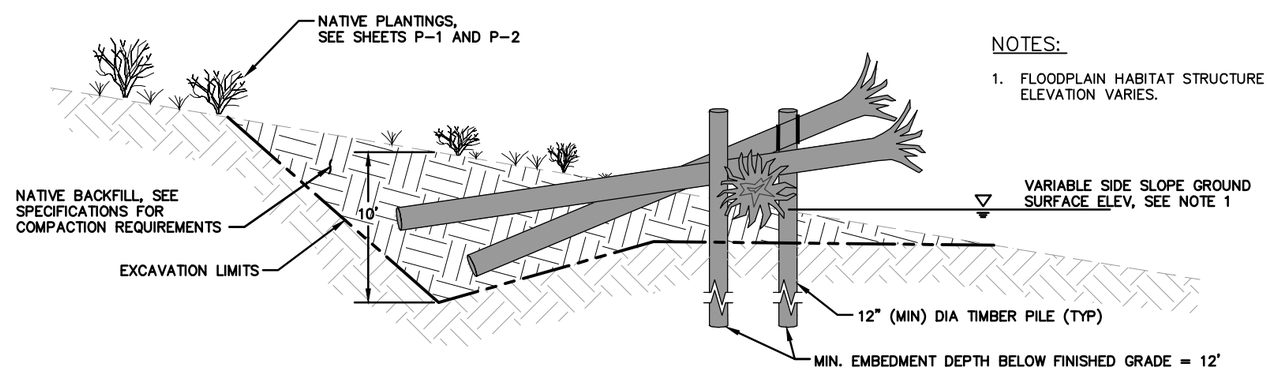

SECTION – FLOODPLAIN HABITAT STRUCTURE, TYPE 2 (B / –)

SCALE: 1"=5'

NOTES:

1. FLOODPLAIN HABITAT STRUCTURE ELEVATION VARIES.

2200 Sixth Avenue
Suite 1100
Seattle, Washington
98121-1820
206-441-9080
206-441-9108 FAX
http://www.herrerainc.com
HERRERA

NO.	REVISION	BY	DATE

DESIGNED: M.B. | CHECKED: M.E. | KENT PROJECT NO. 08-3017 | SCALE: HORIZ: NOTED
DRAWN: R.H. | PROJECT ENGR: M.E. | CONST. MGMT. REVIEW | VERT:
APPROVED: CITY ENGINEER | DATE MAR 2013

BAR IS ONE INCH ON ORIGINAL DRAWING ADJUST SCALES ACCORDINGLY 0" 1"

City of Kent
Public Works Department
Engineering Division

HABITAT STRUCTURE TYPE 1 AND 2 PLAN AND SECTION

DOWNEY FARMSTEAD RESTORATION

SHEET C-15 OF 29
FILE NO. 0817C17

Path:P:\Proj\Y2011\11-05022-000 Downey Farmstead\CAD\Dwgs\0817C17.dwg
Plot Date:11/8/2013 1:23 PM Cad User:Richmond Hulme
Plot Style Table:Newkenthalf.ctb Plotter:DWG To PDF.pc3

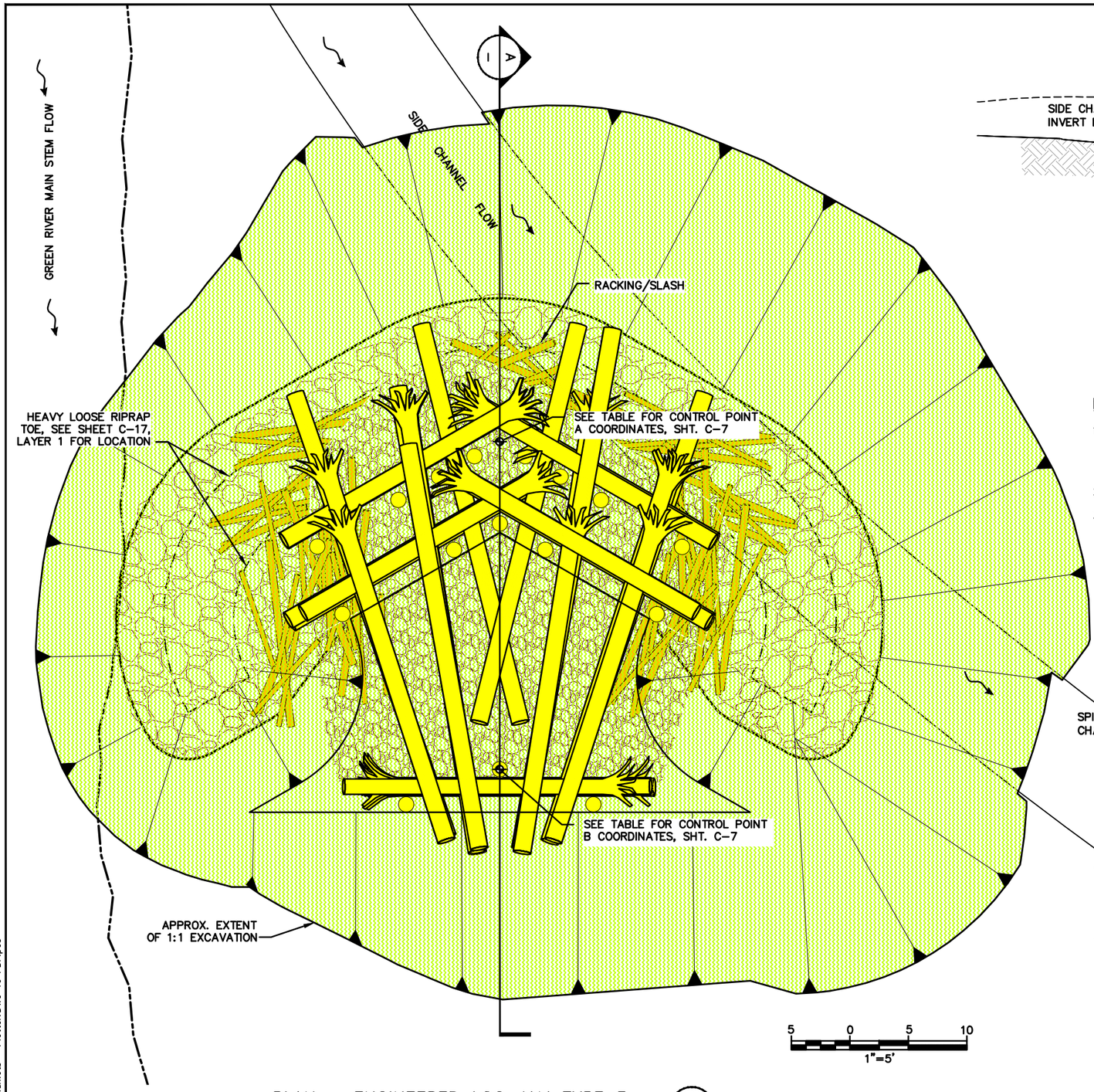

PLAN – ENGINEERED LOG JAM TYPE 3 (1 / C-5)

SCALE: 1"=5'

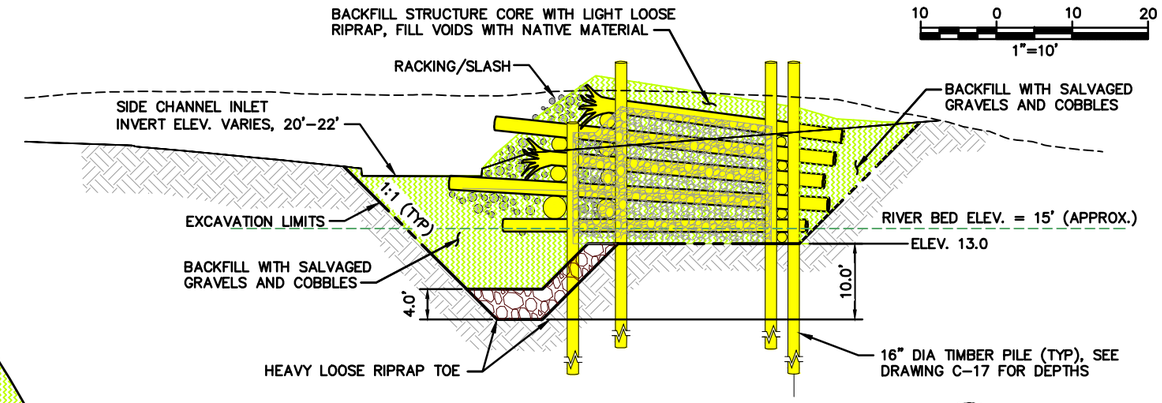

SECTION – ENGINEERED LOG JAM TYPE 3 (A / –)

SCALE: 1"=10'

NOTES:

1. LOG MATERIALS SHALL BE PLACED AT THE LOCATIONS AND ELEVATIONS SPECIFIED ON THE DRAWINGS OR AS DIRECTED BY THE ENGINEER.
2. SEE SHEET C-17 FOR LAYERING PLAN.
3. SEE SPECIFICATIONS FOR LOG MATERIALS AND PILE INSTALLATION REQUIREMENTS.

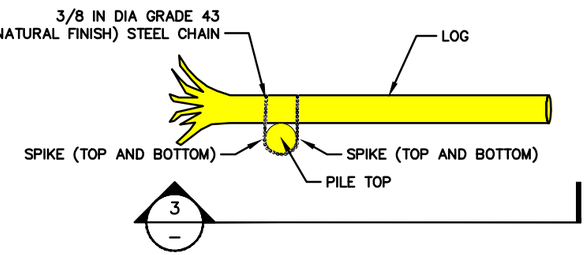

TYPICAL CHAIN LASHING DETAIL (2 / C-15, C-17)

SCALE: NTS

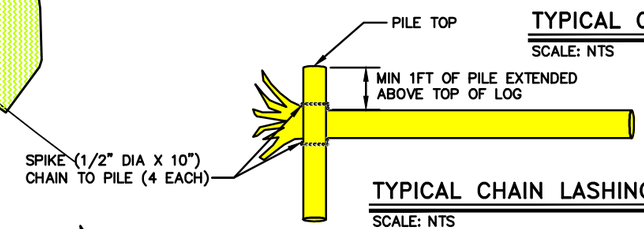

TYPICAL CHAIN LASHING ELEVATION (3 / C-15, C-17)

SCALE: NTS

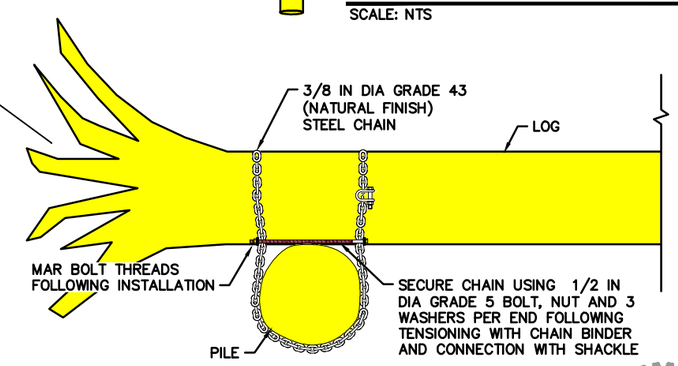

CHAIN CONNECTION DETAIL (4 / C-15, C-17)

SCALE: NTS

2200 Sixth Avenue
Suite 1100
Seattle, Washington
98121-1820
206-441-9080
206-441-9108 FAX
http://www.herrerainc.com
HERRERA

NO.	REVISION	BY	DATE

DESIGNED: M.B. | CHECKED: M.E. | KENT PROJECT NO. 08-3017 | SCALE: HORIZ: NOTED
DRAWN: R.H. | PROJECT ENGR: M.E. | CONST. MGT. REVIEW | VERT:
APPROVED: _____ CITY ENGINEER | DATE MAR 2013

BAR IS ONE INCH ON ORIGINAL DRAWING ADJUST SCALES ACCORDINGLY 0" 1"

City of Kent
Public Works Department
Engineering Division

ENGINEERED LOG JAMS TYPE 3
PLAN AND SECTION

DOWNEY FARMSTEAD
RESTORATION

SHEET C-16 OF 29
FILE NO. 0817C18

Path: P:\Proj\Y2011\11-05022-000 Downey Farmstead\CAD\Dwgs\0817C18.dwg
Plot Date: 11/8/2013 1:23 PM Cad User:Richmond Hulme
Plot Style Table:Newkenthalf.ctb Plotter:DWG To PDF.pc3

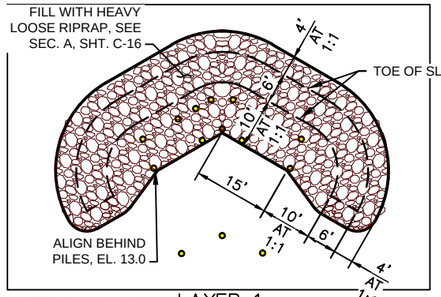

NOTE: LAYOUT IS SYMMETRICAL ABOUT CENTERLINE

LAYER 1

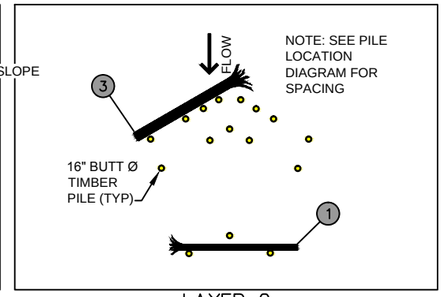

LAYER 2

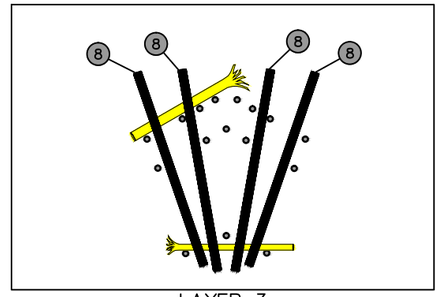

LAYER 3

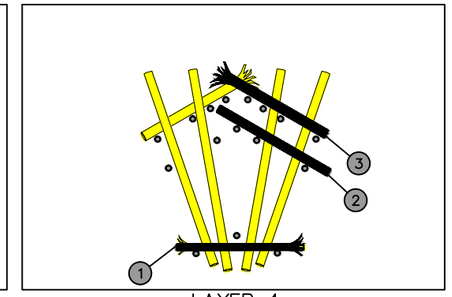

LAYER 4

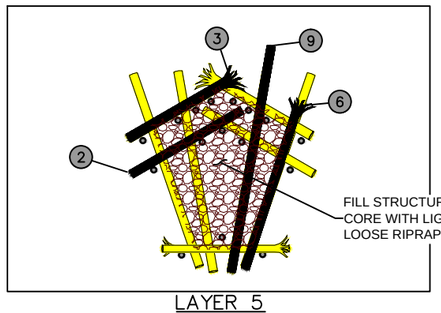

LAYER 5

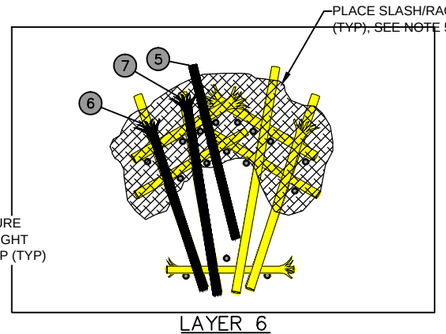

LAYER 6

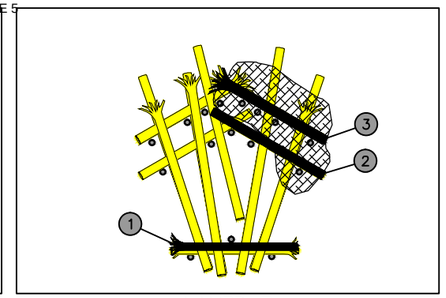

LAYER 7

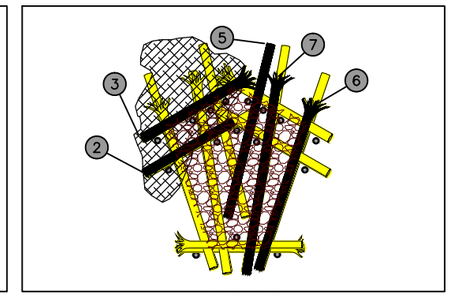

LAYER 8

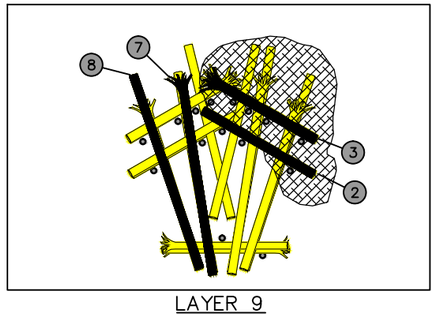

LAYER 9

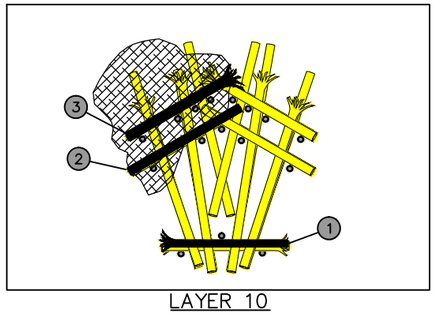

LAYER 10

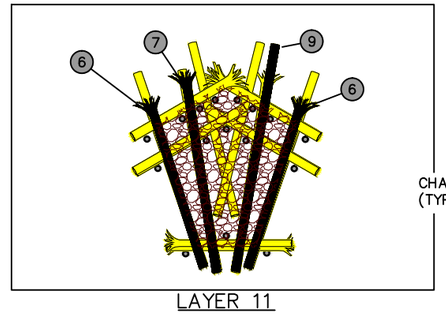

LAYER 11

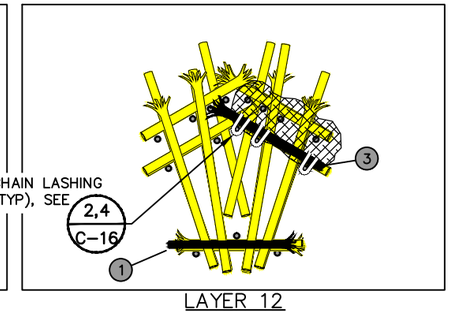

LAYER 12

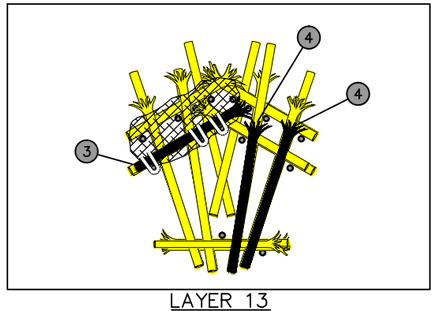

LAYER 13

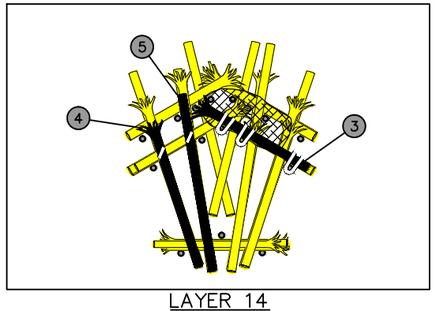

LAYER 14

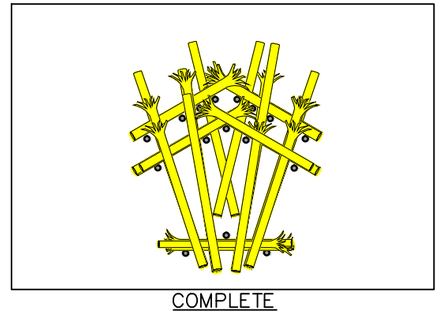

COMPLETE

PILE LOCATION DIAGRAM:

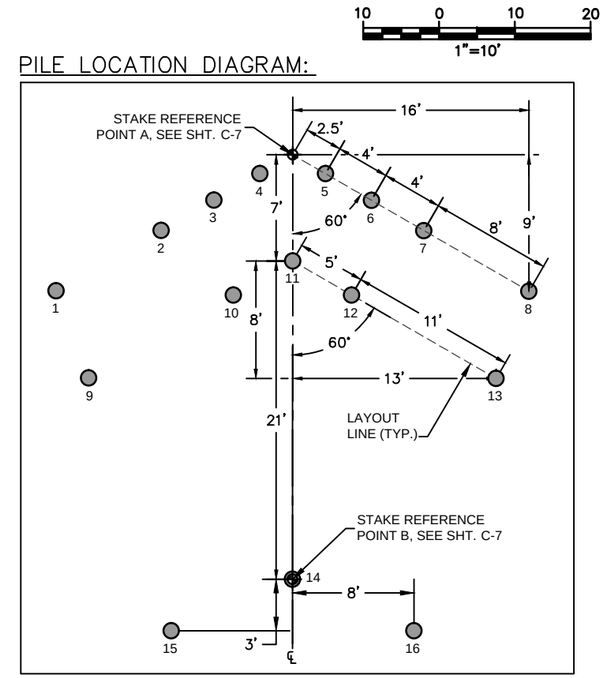

ENGINEERED LOG JAM TYPE 3 PILE SCHEDULE:

PILE #	BUTT DIAMETER (IN)	LENGTH (FT)	MAX. TIP ELEV. (FT)
1-8	16	60	-25
9-13	16	55	-20
14-16	16	45	-10

ENGINEERED LOG JAM TYPE 3 LOG SCHEDULE:

LOG #	DIAMETER (IN)	LENGTH (FT)	ROOTWAD	QUANTITY/STRUCTURE
1	16	25	YES	5
2	18	25	NO	6
3	18	25	YES	10
4	18	30	YES	3
5	18	35	NO	3
6	18	35	YES	5
7	18	40	YES	4
8	18	40	NO	5
9	18	45	NO	2
			TOTAL:	43 PER STRUCTURE

NOTES:

1. PILE LOCATIONS SHALL BE STAKED BY ENGINEER.
2. LOG MATERIALS SHALL BE PLACED AT THE LOCATIONS AND ELEVATIONS SPECIFIED ON THE DRAWINGS OR AS DIRECTED BY THE ENGINEER.
3. TRIM LOGS AS REQUIRED, PER SPECIFICATIONS.
4. LOG ORIENTATION SYMMETRIC ABOUT CENTERLINE.
5. SLASH AND RACKING TO BE PLACED AS FIRST STEP IN LAYER SHOWN.

MARK E. WANK STATE OF WASHINGTON 29434 REGISTERED PROFESSIONAL ENGINEER

HERRERA

2200 Sixth Avenue
Suite 1100
Seattle, Washington
98121-1820
206-441-9080
206-441-9108 FAX
http://www.herrerainc.com

NO.	REVISION	BY	DATE

DESIGNED: M.B. | CHECKED: M.E. | KENT PROJECT NO. 08-3017 | SCALE: HORIZ: NOTED
DRAWN: R.H. | PROJECT ENGR: M.E. | CONST. MGMT. REVIEW | VERT:
APPROVED: CITY ENGINEER | DATE MAR 2013

BAR IS ONE INCH ON ORIGINAL DRAWING ADJUST SCALES ACCORDINGLY 0" 1"

KENT WASHINGTON
City of Kent
Public Works Department
Engineering Division

ENGINEERED LOG JAM TYPE 3 LAYERING PLAN

DOWNEY FARMSTEAD RESTORATION

SHEET C-17 OF 29
FILE NO. 0817C19

Path: P:\Proj\Y2011\11-05022-000 Downey Farmstead\CAD\Dwgs\0817C19.dwg
Plot Date: 11/8/2013 1:23 PM Cad User: Richmond Hulme
Plot Style Table: Newkenthalf.ctb Plotter: DWG To PDF.pc3

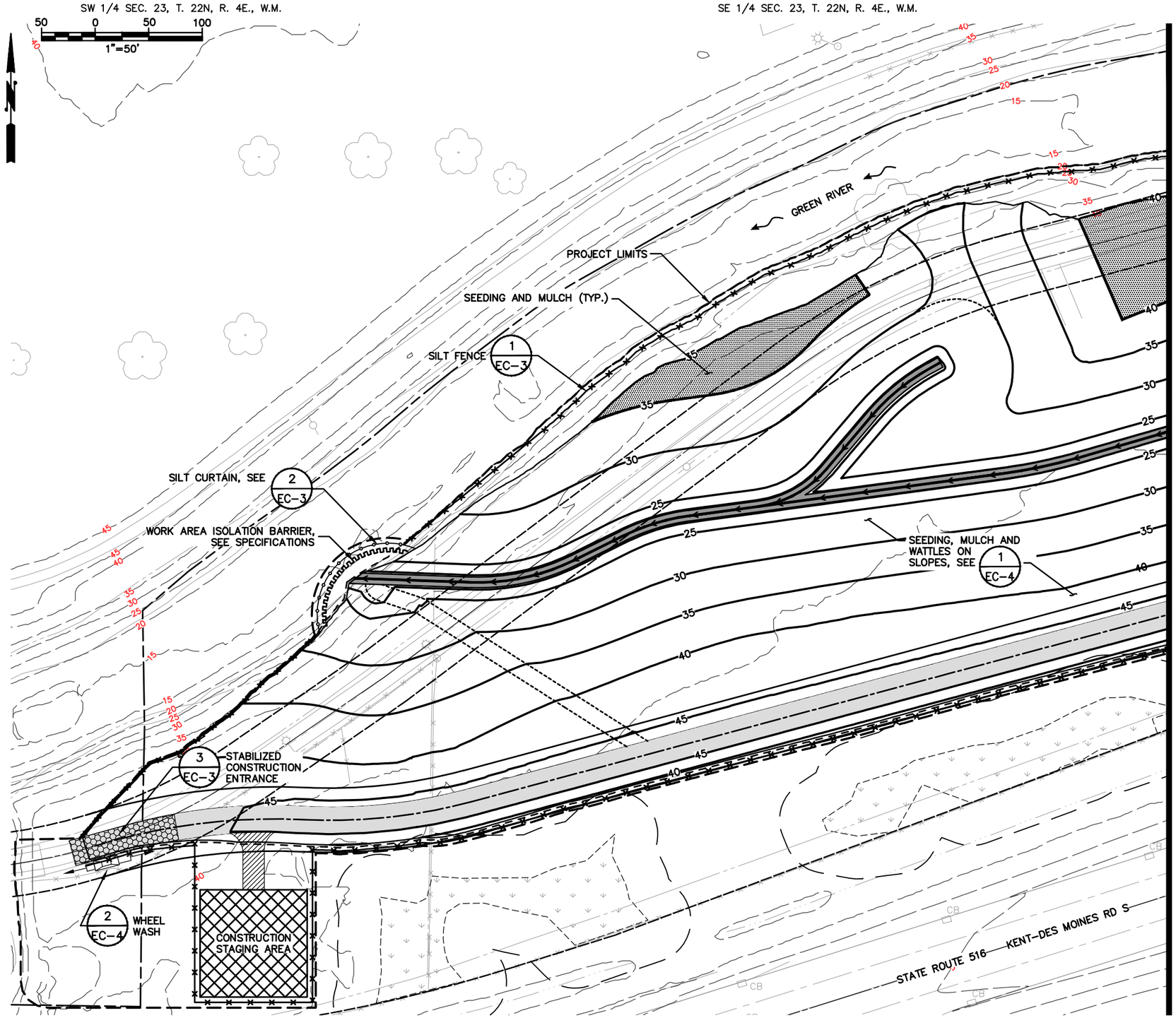

TEMPORARY EROSION AND SEDIMENT CONTROL NOTES:

1. THE IMPLEMENTATION OF THIS TESC PLAN AND THE CONSTRUCTION, MAINTENANCE, REPLACEMENT AND UPGRADING OF THESE TESC FACILITIES IS THE RESPONSIBILITY OF THE CONTRACTOR UNTIL ALL CONSTRUCTION IS APPROVED.
2. DURING THE CONSTRUCTION PERIOD, NO DISTURBANCE BEYOND THE CLEARING LIMITS SHALL BE PERMITTED UNLESS AUTHORIZED BY THE ENGINEER. TEMPORARY FENCING SHALL BE MAINTAINED BY THE CONTRACTOR FOR THE DURATION OF THE CONSTRUCTION.
3. THE TESC FACILITIES SHOWN ON THIS PLAN MUST BE CONSTRUCTED PRIOR TO ALL CLEARING AND GRADING ACTIVITIES, AND IN SUCH A MANNER TO INSURE THAT SEDIMENT LADEN WATER DOES NOT ENTER THE RIVER OR VIOLATE APPLICABLE WATER STANDARDS.
4. THE TESC FACILITIES SHOWN ON THIS PLAN ARE THE MINIMUM REQUIREMENTS FOR THE ANTICIPATED SITE CONDITIONS. DURING THE CONSTRUCTION PERIOD, THESE TESC FACILITIES SHALL BE UPGRADED (E.G. ADDITIONAL SUMPS, RELOCATIONS OF DITCHES AND SILT FENCES, ETC.) AS NEEDED FOR UNEXPECTED STORM EVENTS OR AS THE ENGINEER DEEMS NECESSARY.
5. THE TESC FACILITIES SHALL BE INSPECTED DAILY BY THE CONTRACTOR AND MAINTAINED AS NECESSARY TO ENSURE THEIR CONTINUED FUNCTIONING AND OPERATION, OR WITHIN 24 HOURS FOLLOWING A STORM EVENT. WHEN TEMPORARY CONTROL MEASURES ARE NO LONGER NEEDED, THE CONTRACTOR SHALL REMOVE THEM AND FINISH RESTORING THE AREAS THEY OCCUPIED AS THE ENGINEER DIRECTS.
6. ANY AREA STRIPPED OF VEGETATION, INCLUDING ROADWAY EMBANKMENTS DURING THE TIME OF MAY 1ST TO SEPTEMBER 30TH, WHERE NO FURTHER WORK IS ANTICIPATED FOR A PERIOD OF SEVEN (7) DAYS, SHALL BE IMMEDIATELY STABILIZED WITH THE APPROVED TESC METHODS (E.G. SEEDING, MULCHING, NETTING, EROSION BLANKETS, ETC.). GRASS SEEDING FOR FAST GERMINATING GRASSES ALONE WILL BE ACCEPTABLE ONLY IF LEFT UNDISTURBED FOR MORE THAN A MINIMUM OF SIX (6) WEEKS DURING THE MONTHS OF APRIL THROUGH OCTOBER INCLUSIVE, AS APPROVED BY THE ENGINEER.
7. DURING THE PERIOD OF OCTOBER 1ST THROUGH APRIL 30TH, ALL PROJECT DISTURBED AREAS THAT ARE TO BE LEFT UNWORKED FOR MORE THAN TWO (2) DAYS SHALL BE COVERED BY ONE OF THE FOLLOWING COVER MEASURES: MULCH, SODDING OR PLASTIC COVERING.
8. WHERE SEEDING FOR TEMPORARY EROSION CONTROL IS REQUIRED, FAST GERMINATING GRASSES (E.G. ANNUAL OR PERENNIAL RYE) SHALL BE APPLIED AT AN APPROPRIATE RATE OF APPROXIMATELY 80 POUNDS PER ACRE. SHOULD THE AREA BE DISTURBED DUE TO RAINFALL EVENTS BEFORE SUFFICIENT GRASS GROWTH, OTHER PROTECTIVE MEASURES WILL BE REQUIRED IMMEDIATELY TO PREVENT EROSION WITHIN THAT AREA.
9. WHERE STRAW MULCH FOR TEMPORARY EROSION CONTROL IS REQUIRED, IT SHALL BE APPLIED AT A MINIMUM THICKNESS OF THREE (3) INCHES OR 3,000 LBS PER ACRE.
10. AS CONSTRUCTION PROGRESSES AND UNEXPECTED SEASONAL CONDITIONS DICTATE, AND AS THE ENGINEER REQUIRES, THE CONTRACTOR SHOULD ANTICIPATE THAT MORE TESC MEASURES WILL BE NECESSARY TO PROTECT THE RIVER AND/OR ADJACENT PROPERTIES. IT SHALL BE THE RESPONSIBILITY OF THE CONTRACTOR TO ADDRESS DEFICIENT TESC CONDITIONS AND PROVIDE ADDITIONAL FACILITIES, OVER AND ABOVE MINIMUM REQUIREMENTS OUTLINED ON THE APPROVED PLANS.
11. SILT FENCE SHALL BE USED WHERE NOTED ON THE PLANS OR AS DIRECTED BY THE ENGINEER.
12. THE TESC PLAN DRAWINGS ARE CONCEPTUAL AND THE CONTRACTOR IS REQUIRED TO SUBMIT A DETAILED TESC PLAN IN ACCORDANCE WITH KENT SPECIAL PROVISIONS SECTION 1-08.0,
13. SHOULD THE CONTRACTOR FAIL TO INSTALL THE REQUIRED TESC MEASURES, OR TO PERFORM MAINTENANCE IN A TIMELY MANNER, OR FAILS TO TAKE IMMEDIATE ACTION TO INSTALL ADDITIONAL APPROVED PROTECTIVE MEASURES, ALL FINES, COST OF CLEANUP, COSTS OF DELAYS AND DOWN TIME SHALL BE BORNE BY THE CONTRACTOR.
14. STOCKPILES OF SOILS OR OTHER ERODIBLE MATERIAL MUST BE COVERED DAILY DEPENDING ON THE WEATHER FORECAST, AND AS DIRECTED BY THE CITY. STOCKPILES MUST BE LOCATED AT LEAST 50 FEET FROM STORM DRAIN INLETS, WATERWAYS AND DRAINAGE CHANNELS UNLESS OTHERWISE APPROVED BY THE CITY.

MARK E. WEBANK STATE OF WASHINGTON 29434 REGISTERED PROFESSIONAL ENGINEER

HERRERA
2200 Sixth Avenue
Suite 1100
Seattle, Washington
98121-1820
206-441-9080
206-441-9108 FAX
http://www.herrerainc.com

NO.	REVISION	BY	DATE

DESIGNED: M.B. | CHECKED: M.E. | KENT PROJECT NO. 08-3017
DRAWN: R.H. | PROJECT ENGR: M.E. | CONST. MGMT. REVIEW
APPROVED: _____ CITY ENGINEER | DATE MAR 2013
SCALE: HORIZ: NOTED | VERT:
BAR IS ONE INCH ON ORIGINAL DRAWING ADJUST SCALES ACCORDINGLY 0" 1"

City of Kent
Public Works Department
Engineering Division

TESC AND WATER MANAGEMENT PLAN - WEST

DOWNEY FARMSTEAD RESTORATION

SHEET EC-1 OF 29
FILE NO. 0817EC01

Path: P:\Proj\Y2011\11-05022-000 Downey Farmstead\CAD\Dwgs\0817EC01.dwg
Plot Date: 11/8/2013 1:23 PM Cad User: Richmond Hulme
Plot Style Table: Newkenthalf.ctb Plotter: DWG To PDF.pc3

SW 1/4 SEC. 23, T. 22N, R. 4E., W.M.

SE 1/4 SEC. 23, T. 22N, R. 4E., W.M.

MATCHLINE – SEE SHEET EC-1

SILT CURTAIN (TYP), SEE 2/EC-3

WORK AREA ISOLATION BARRIER (TYP), SEE SPECIFICATIONS

SEEDING AND MULCH (TYP.)

GREEN RIVER

SILT FENCE (TYP) 1/EC-3

PROJECT LIMITS

SEEDING MULCH, AND WATTLES ON SLOPES, SEE 1/EC-4

STABILIZED CONSTRUCTION ENTRANCE 3/EC-3

WHEEL WASH 2/EC-4

STATE ROUTE 516 KENT-DES MOINES RD S

PAVED

FH

CB

MH

50 0 50 100

1"=50'

SEE SHEET EC-1 FOR TEMPORARY EROSION AND SEDIMENT CONTROL NOTES.

2200 Sixth Avenue
Suite 1100
Seattle, Washington
98121-1820
206-441-9080
206-441-9108 FAX
HERRERA
http://www.herrerainc.com

NO.	REVISION	BY	DATE

DESIGNED: M.B. CHECKED: M.E. KENT PROJECT NO. 08-3017 SCALE: HORIZ: NOTED

DRAWN: R.H. PROJECT ENGR: M.E. CONST. MGMT. REVIEW VERT:

APPROVED: CITY ENGINEER DATE MAR 2013

BAR IS ONE INCH ON ORIGINAL DRAWING ADJUST SCALES ACCORDINGLY 0" 1"

City of Kent
Public Works Department
Engineering Division

TESC AND WATER MANAGEMENT PLAN – EAST

DOWNEY FARMSTEAD RESTORATION

SHEET EC-2 OF 29

FILE NO. 0817EC02

Path: P:\Proj\Y2011\11-05022-000 Downey Farmstead\CAD\Dwgs\0817EC02.dwg
Plot Date: 11/8/2013 1:23 PM Cad User: Richmond Hulme
Plot Style Table: Newkenthalf.ctb Plotter: DWG To PDF.pc3

SW 1/4 SEC. 23, T. 22N, R. 4E., W.M.

SE 1/4 SEC. 23, T. 22N, R. 4E., W.M.

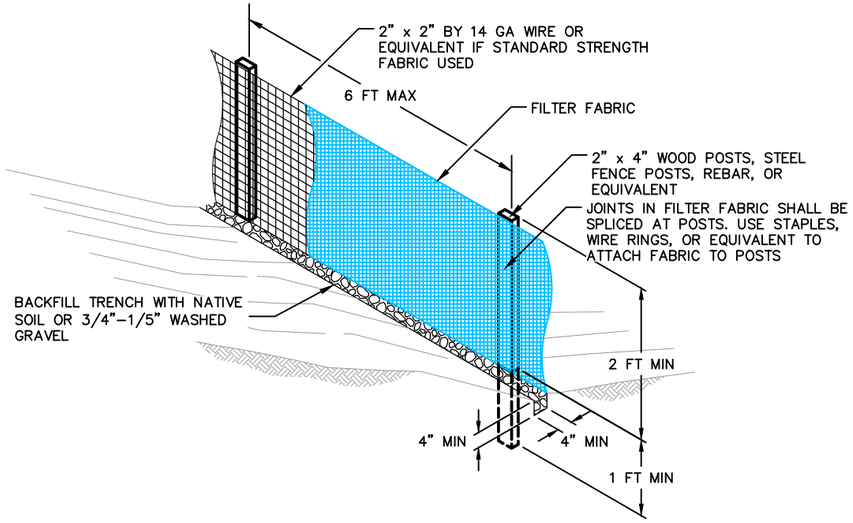

NOTES:

1. THE FILTER FABRIC (CONSTRUCTION GEOTEXTILE FOR TEMPORARY SILT FENCE) SHALL BE PURCHASED IN A CONTINUOUS ROLL, 5FT WIDE, CUT TO THE LENGTH OF THE BARRIER TO AVOID USE OF JOINTS. WHEN JOINTS ARE NECESSARY, THE FILTER FABRIC SHALL BE SPLICED TOGETHER ONLY AT A SUPPORT POST, WITH A MINIMUM 6 INCH OVERLAP, AND SECURELY FASTENED TO THE POST.
2. THE FENCE POSTS SHALL BE SPACED A MAXIMUM OF 6 FEET APART AND DRIVEN SECURELY INTO THE GROUND A MINIMUM OF 12 INCHES.
3. A TRENCH SHALL BE EXCAVATED A MINIMUM OF 4 INCHES WIDE BY 4 INCHES DEEP, UPSLOPE AND ADJACENT TO THE POST TO ALLOW THE FILTER FABRIC TO BE BURIED.
4. THE FILTER FABRIC SHALL BE STAPLED OR WIRED TO THE POSTS, AND 12 INCHES OF THE FABRIC SHALL BE EXTENDED INTO THE TRENCH. THE FABRIC SHALL NOT EXTEND MORE THAN 30 INCHES ABOVE THE ORIGINAL GROUND SURFACE. FILTER FABRIC SHALL NOT BE STAPLED TO TREES.
5. THE TRENCH SHALL BE BACKFILLED WITH NATIVE SOIL OR WITH 3/4"–1 1/2" WASHED GRAVEL.
6. SILT FENCES SHALL BE REMOVED AT DIRECTION OF ENGINEER, BUT NOT BEFORE THE UPSLOPE AREA HAS BEEN PERMANENTLY STABILIZED.
7. SILT FENCES SHALL BE INSPECTED IMMEDIATELY AFTER EACH RAINFALL EVENT AND AT LEAST DAILY DURING PROLONGED RAINFALL. ANY REQUIRED REPAIRS SHALL BE MADE IMMEDIATELY.
8. SILT FENCE PERFORMANCE SHALL BE EVALUATED AND SILT FENCE LOCATIONS SHALL BE EVALUATED AND ADJUSTED AS DIRECTED OR APPROVED BY THE ENGINEER AND THE PERMITTING AUTHORITY.
9. SILT FENCE SHALL BE INSTALLED AS SHOWN ON DRAWINGS.
10. ANY DEVIATION OR CHANGE TO SILT FENCE DETAILS MUST BE APPROVED BY THE OWNERS REPRESENTATIVE.
11. THE CONTRACTOR SHALL MAINTAIN A COPY OF THE MANUFACTURER'S SPECIFICATIONS FOR FILTER FABRIC ON SITE.
12. MAINTENANCE STANDARDS:
    A. ANY DAMAGE SHALL BE REPAIRED IMMEDIATELY.
    B. IF CONCENTRATED FLOWS ARE EVIDENT UPHILL OF THE SILT FENCE, THEY MUST BE INTERCEPTED AND CONVEYED TO A SEDIMENT TRAP OR POND, OR OTHERWISE DIVERTED TO A LOCATION THAT DOES NOT RESULT IN TURBID DISCHARGES TO SURFACE WATERS.
    C. THE UPHILL SIDE OF THE SILT FENCE SHALL BE CHECKED FOR SIGNS OF THE SILT FENCE CLOGGING, ACTING AS A BARRIER TO FLOW, AND CAUSING CHANNELIZATION OF FLOWS PARALLEL TO THE FENCE. IF SUCH CHANNELIZATION OCCURS, THE CONTRACTOR SHALL REPLACE THE FENCE OR REMOVE THE TRAPPED SEDIMENT.
    D. SEDIMENT SHALL BE REMOVED AND PROPERLY DISPOSED OF WHEN THE SEDIMENT IS 6 INCHES HIGH.
    E. IF THE FILTER FABRIC HAS DETERIORATED DUE TO ULTRAVIOLET BREAKDOWN, IT SHALL BE REPLACED.

DETAIL – SILT FENCE (1)
SCALE: NONE
EC–1, EC–2

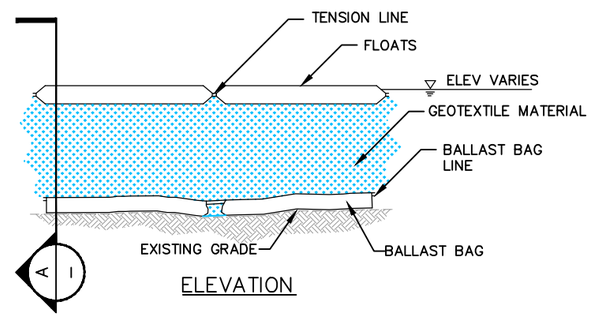

ELEVATION

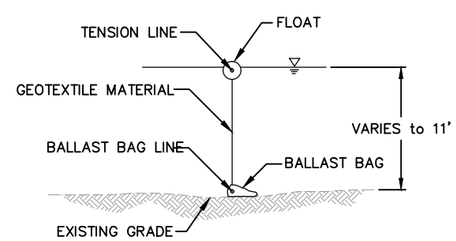

SECTION A

NOTES:

1. PLACE SILT CURTAIN TO PROVIDE MIN. 5' DISTANCE FROM OUTER/RIVERWARD TOE OF BULK BAG DAM.
2. ATTACH ENDS OF SILT CURTAIN TO BANK ON EITHER END, MINIMIZING ANY GAPS WHERE TURBID WATER COULD PASS.

DETAIL – SILT CURTAIN (2)
SCALE: NTS
EC–1, EC–2

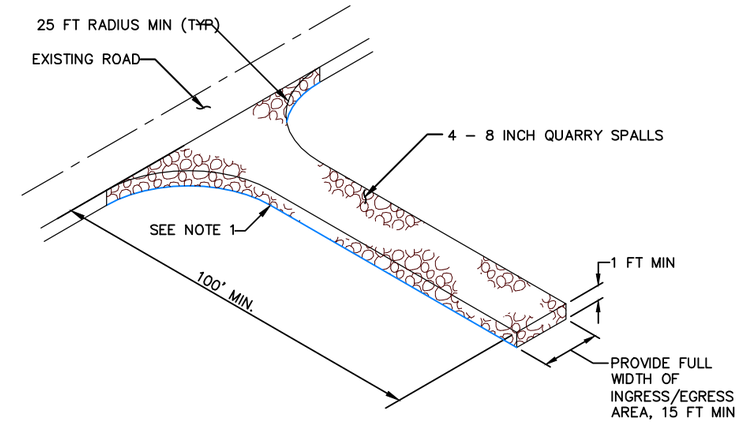

DETAIL – STABILIZED CONSTRUCTION ENTRANCE (3)
SCALE: NONE
EC–1, EC–2

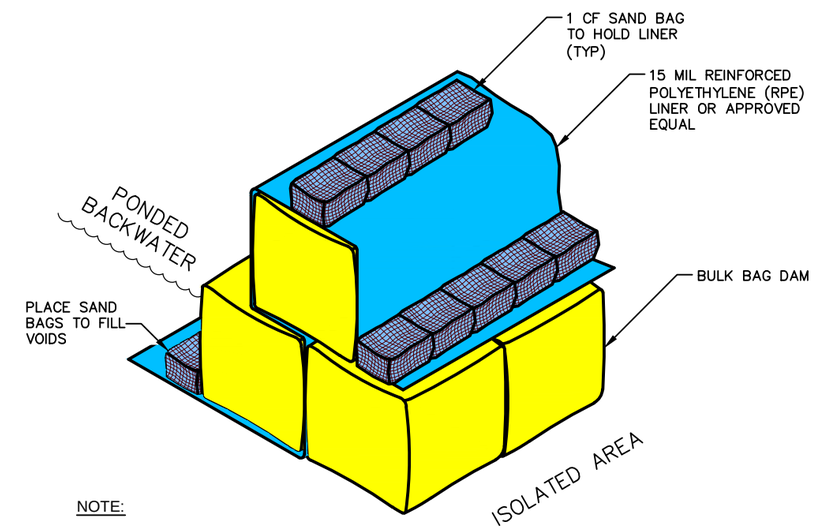

NOTE:

WORK AREA ISOLATION ALTERNATIVE.

DETAIL – BULK BAG DAM (OPTIONAL) (–)
SCALE: NTS
EC–1, EC–2

2200 Sixth Avenue
Suite 1100
Seattle, Washington
98121-1820
206-441-9080
206-441-9108 FAX
HERRERA
http://www.herrerainc.com

NO.	REVISION	BY	DATE

DESIGNED: M.B. | CHECKED: M.E. | KENT PROJECT NO. 08–3017 | SCALE: HORIZ: NOTED
DRAWN: R.H. | PROJECT ENGR: M.E. | CONST. MGT. REVIEW | VERT:
APPROVED: CITY ENGINEER | DATE MAR 2013

BAR IS ONE INCH ON ORIGINAL DRAWING ADJUST SCALES ACCORDINGLY 0" 1"

City of Kent
Public Works Department
Engineering Division

TESC AND WATER MANAGEMENT DETAILS AND NOTES – 1 OF 2

DOWNEY FARMSTEAD RESTORATION

SHEET EC–3 OF 29
FILE NO. 0817EC03

Path: P:\Proj\Y2011\11-05022-000 Downey Farmstead\CAD\Dwgs\0817EC03.dwg
Plot Date: 11/8/2013 1:23 PM Cad User: Richmond Hulme
Plot Style Table: Newkenthalf.ctb Plotter: DWG To PDF.pc3

SW 1/4 SEC. 23, T. 22N, R. 4E., W.M.

SE 1/4 SEC. 23, T. 22N, R. 4E., W.M.

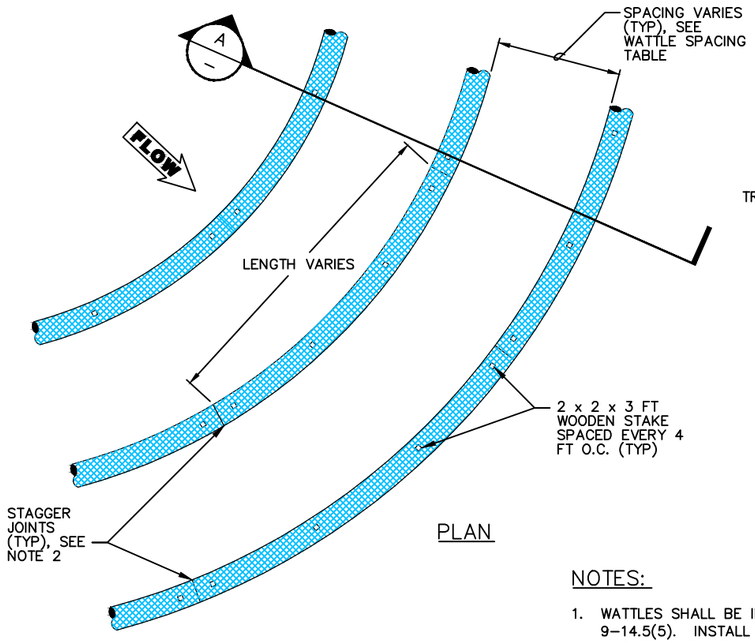

PLAN

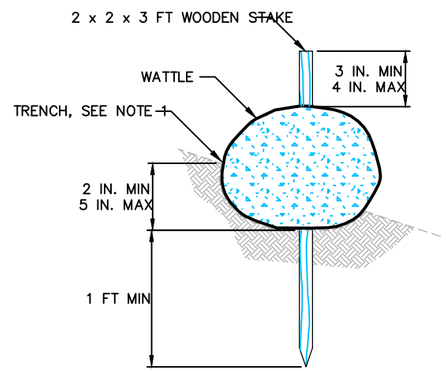

DETAIL

WATTLE SPACING TABLE:

SLOPE	MAX SPACING
1:1	10 FT
2:1	20 FT
3:1	30 FT
4:1	40 FT

NOTES:

1. WATTLES SHALL BE IN ACCORDANCE WITH WSDOT STANDARD SPECIFICATION 9-14.5(5). INSTALL WATTLES ALONG CONTOURS. INSTALLATION SHALL BE IN ACCORDANCE WITH WSDOT STANDARD SPECIFICATION 8-01.3(10).
2. SECURELY KNOT EACH END OF WATTLE. ABUT ADJACENT WATTLES
3. TIGHTLY, END TO END, WITHOUT OVERLAPPING THE ENDS.
4. PILOT HOLES MAY BE DRIVEN THROUGH THE WATTLES AND INTO THE SOIL WHEN SOIL CONDITIONS REQUIRE.
5. LIVE STAKES MAY BE USED FOR PERMANENT INSTALLATION AND SHALL BE IN ACCORDANCE WITH WSDOT STANDARD SPECIFICATION 9-14.5(6).
6. WATTLES SHALL BE INSPECTED REGULARLY, AND IMMEDIATELY AFTER A RAINFALL PRODUCES RUNOFF, TO ENSURE THEY REMAIN THOROUGHLY ENTRENCHED AND IN CONTACT WITH THE SOIL.
7. PERFORM MAINTENANCE IN ACCORDANCE WITH WSDOT STANDARD SPECIFICATION 8-01.3(15).

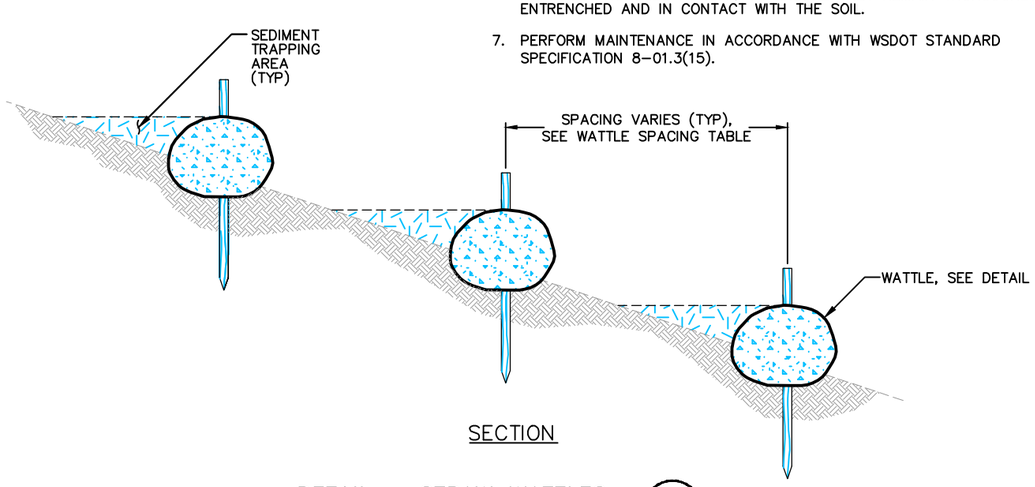

SECTION

DETAIL – STRAW WATTLES (1)

SCALE: NONE — EC-1, EC-2

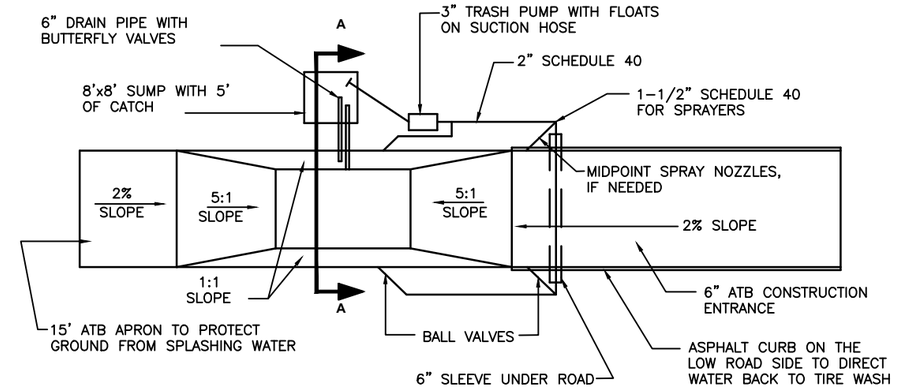

PLAN VIEW

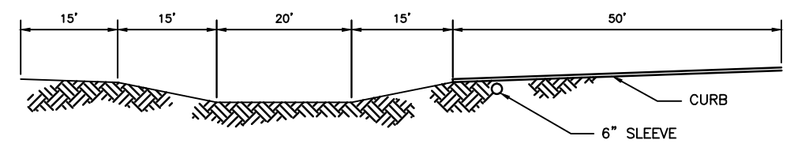

ELEVATION VIEW

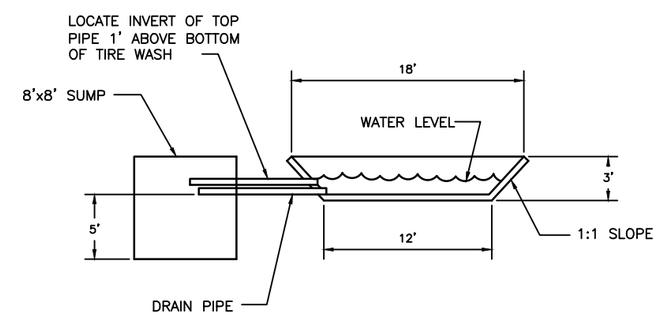

SECTION A–A

NOTES:

1. BUILD 8'x8' SUMP TO ACCOMODATE CLEANING BY TRACKHOE.

DETAIL – TIRE WASH (2)

SCALE: NONE — EC-1, EC-2

2200 Sixth Avenue
Suite 1100
Seattle, Washington
98121-1820
206-441-9080
206-441-9108 FAX
http://www.herrerainc.com

NO.	REVISION	BY	DATE

DESIGNED: M.B. | CHECKED: M.E. | KENT PROJECT NO. 08-3017 | SCALE: HORIZ: NOTED VERT:

DRAWN: R.H. | PROJECT ENGR: M.E. | CONST. MGT. REVIEW

APPROVED: CITY ENGINEER | DATE MAR 2013

BAR IS ONE INCH ON ORIGINAL DRAWING ADJUST SCALES ACCORDINGLY 0" 1"

City of Kent
Public Works Department
Engineering Division

TESC AND WATER MANAGEMENT DETAILS AND NOTES – 2 OF 2

DOWNEY FARMSTEAD RESTORATION

SHEET EC-4 OF 29

FILE NO. 0817EC04

Path: P:\Proj\Y2011\11-05022-000 Downey Farmstead\CAD\Dwgs\0817EC04.dwg
Plot Date: 11/8/2013 1:24 PM Cad User: Richmond Hulme
Plot Style Table: Newkenthalf.ctb Plotter: DWG To PDF.pc3

SW 1/4 SEC. 23, T. 22N, R. 4E., W.M.

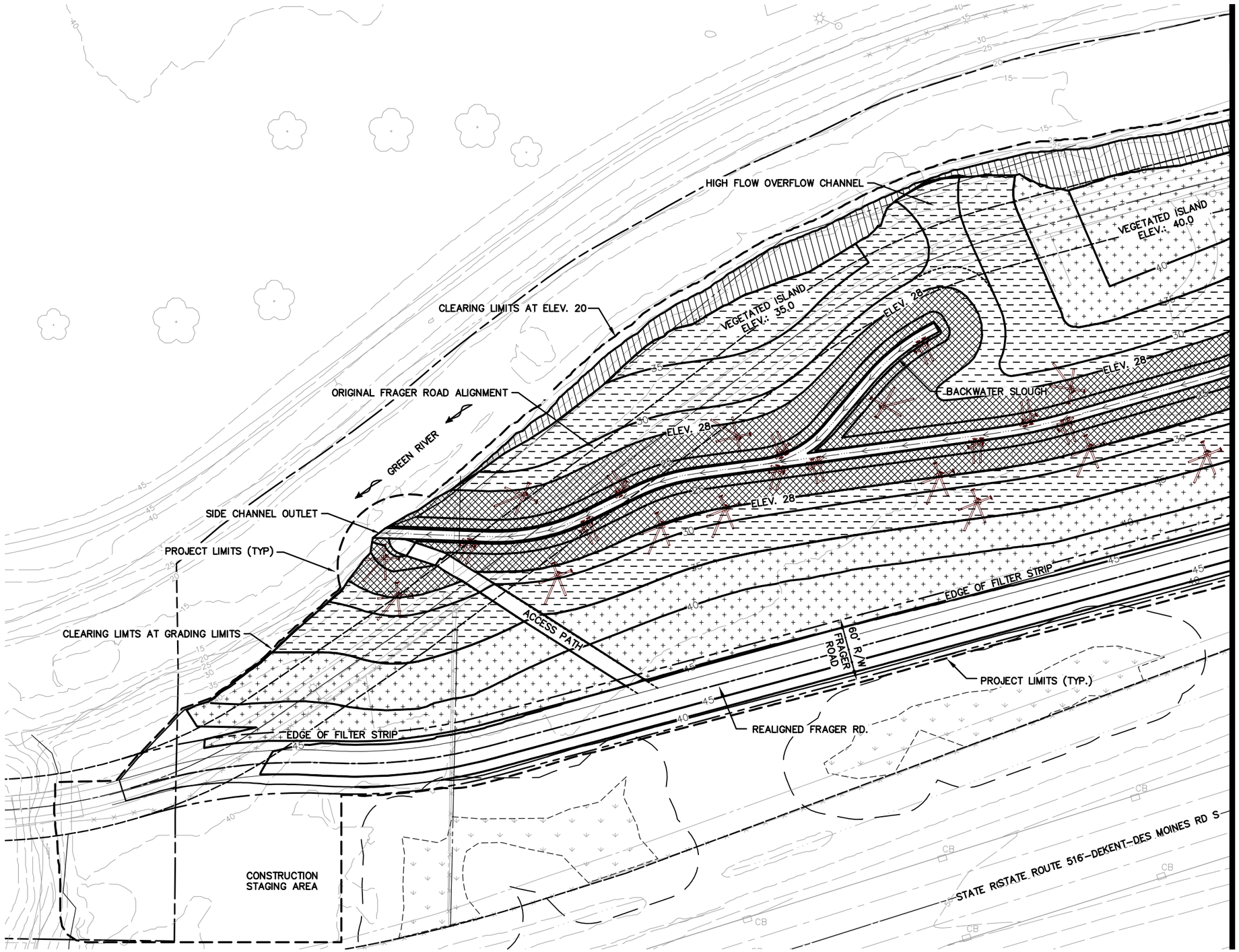

50 0 50 100
1"=50'

LEGEND:

- SCRUB SHRUB (PSS)
- FORESTED WETLAND (PFO)
- FORESTED UPLAND
- STEEP SLOPE

NOTES:

1. SEE PLANTING MATERIAL SCHEDULE ON SHEET P-3 FOR PLANT SPECIES AND QUANTITIES IN EACH PLANTING ZONE.
2. SEE SHEET P-4 FOR PLANTING DETAILS.

MARK E. WEBANK STATE OF WASHINGTON 29434 REGISTERED PROFESSIONAL ENGINEER

HERRERA

2200 Sixth Avenue
Suite 1100
Seattle, Washington
98121-1820
206-441-9080
206-441-9108 FAX
http://www.herrerainc.com

NO.	REVISION	BY	DATE

DESIGNED: M.B. | CHECKED: M.E. | KENT PROJECT NO. 08-3017 | SCALE: HORIZ: NOTED
DRAWN: R.H. | PROJECT ENGR: M.E. | CONST. MGMT. REVIEW | VERT:
APPROVED: CITY ENGINEER | DATE MAR 2013

BAR IS ONE INCH ON ORIGINAL DRAWING ADJUST SCALES ACCORDINGLY 0" 1"

KENT WASHINGTON

City of Kent
Public Works Department
Engineering Division

PLANTING PLAN - WEST

DOWNEY FARMSTEAD RESTORATION

SHEET P-1 OF 29

FILE NO. 0817P01

Path: P:\Proj\Y2011\11-05022-000 Downey Farmstead\CAD\Dwgs\0817P01.dwg
Plot Date: 11/8/2013 1:24 PM Cad User: Richmond Hulme
Plot Style Table: Newkenthalf.ctb Plotter: DWG To PDF.pc3

SE 1/4 SEC. 23, T. 22N, R. 4E., W.M.

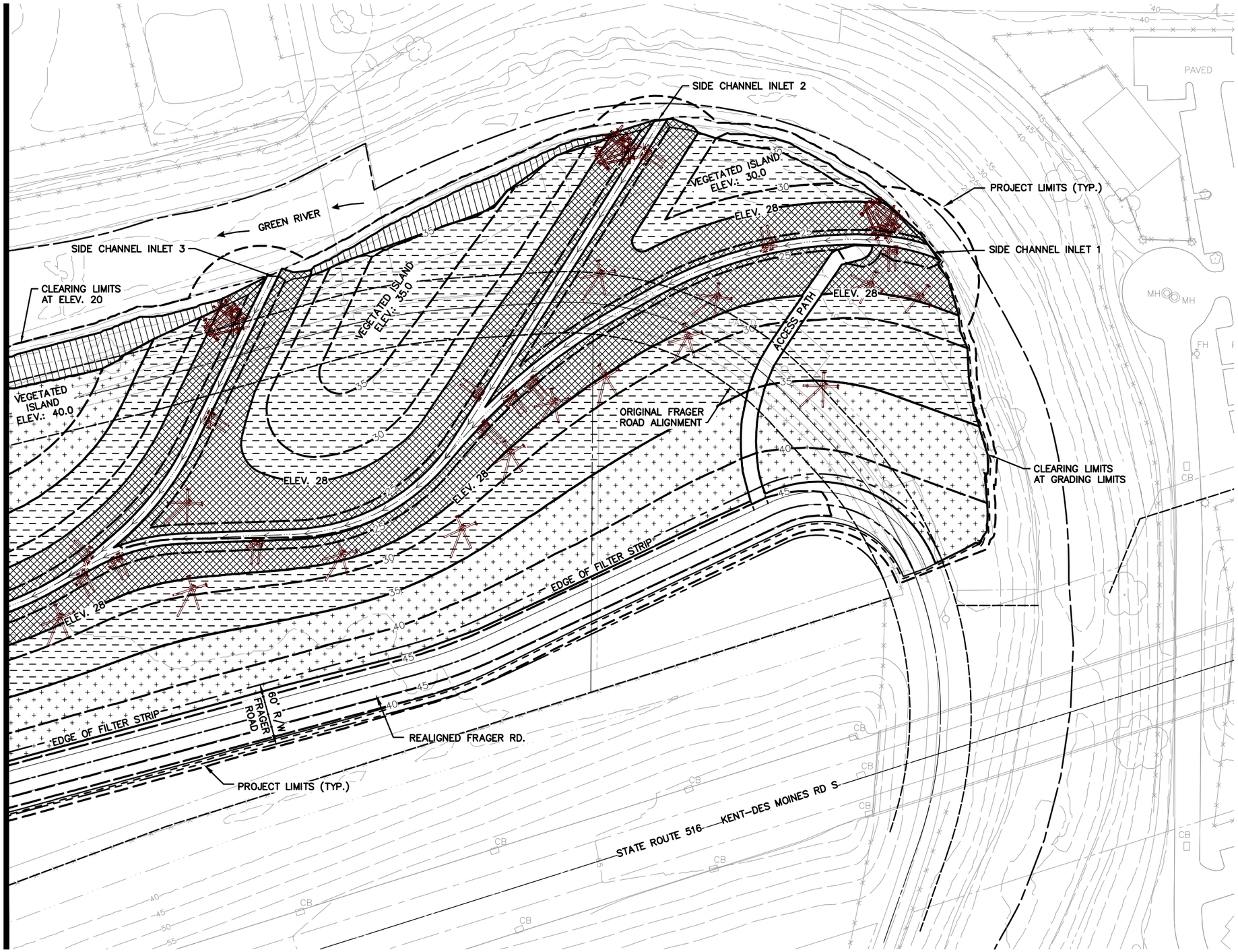

50 0 50 100
1"=50'

LEGEND:

- SCRUB SHRUB (PSS)
- FORESTED WETLAND (PFO)
- FORESTED UPLAND
- STEEP SLOPE

NOTES:

1. SEE PLANTING MATERIAL SCHEDULE ON SHEET P–3 FOR PLANT SPECIES AND QUANTITIES IN EACH PLANTING ZONE.
2. SEE SHEET P–4 FOR PLANTING DETAILS.

2200 Sixth Avenue
Suite 1100
Seattle, Washington
98121-1820
206-441-9080
206-441-9108 FAX
HERRERA
http://www.herrerainc.com

NO.	REVISION	BY	DATE

DESIGNED: M.B. | CHECKED: M.E. | KENT PROJECT NO. 08–3017 | SCALE: HORIZ: NOTED
DRAWN: R.H. | PROJECT ENGR: M.E. | CONST. MGMT. REVIEW | VERT:
APPROVED: CITY ENGINEER | DATE MAR 2013

BAR IS ONE INCH ON ORIGINAL DRAWING ADJUST SCALES ACCORDINGLY
0" 1"

City of Kent
Public Works Department
Engineering Division

PLANTING PLAN – EAST

DOWNEY FARMSTEAD RESTORATION

SHEET P–2 OF 29
FILE NO. 0817P02

Path: P:\Proj\Y2011\11-05022-000 Downey Farmstead\CAD\Dwgs\0817P02.dwg
Plot Date: 11/8/2013 1:24 PM Cad User: Richmond Hulme
Plot Style Table: Newkenthalf.ctb Plotter: DWG To PDF.pc3

PLANTING NOTES:

1. ENGINEER SHALL APPROVE GRADING PRIOR TO PLANT INSTALLATION.
2. ENGINEER SHALL APPROVE ALL PLANT ZONE BOUNDARIES AND PLANT LAYOUT PRIOR TO PLANTING.
3. PLANTING SHALL OCCUR DURING THE MONTH OF OCTOBER AFTER FINISH GRADE ACCOMPLISHED.
4. EROSION CONTROL SEEDING USING SPECIFIED SEED MIXES SHALL OCCUR AS SOON AS CONSTRUCTION IS COMPLETED IN ORDER TO PROTECT SOILS. FOLLOW UP SEEDING MAY BE NEEDED IN SEPTEMBER TO ASSURE SUCCESSFUL PLANT ESTABLISHMENT. SEE SPECIFICATIONS FOR SEED MIX AND APPLICATION RATE.
5. ALL PLANTS SHALL CONFORM TO THE STANDARDS OF THE CURRENT EDITION OF AMERICAN STANDARD FOR NURSERY STOCK AS APPROVED BY THE AMERICAN NATIONAL STANDARDS INSTITUTE (ANSI Z60.1–2004).
6. ALL PLANT MATERIALS SHALL HAVE NORMAL, WELL–DEVELOPED BRANCHES AND VIGOROUS ROOT SYSTEMS, AND BE FREE FROM PHYSICAL DEFECTS, PLANT DISEASES, AND INSECT PESTS.
7. PLANT SUBSTITUTIONS ARE SUBJECT TO APPROVAL BY THE ENGINEER.
8. PLANTS SHALL BE TAGGED FOR IDENTIFICATION WHEN DELIVERED.
9. KEEP PLANTS SHADED UNTIL THE ACTUAL TIME OF PLANTING. DO NOT LET THE PLANT MATERIAL SIT IN THE SUN OR DRY OUT BEFORE PLANTING.
10. EMERGENT PLUGS SHALL BE KEPT IN COOL DARK PLACE PRIOR TO PLANTING. EMERGENT PLUGS SHALL BE KEPT MOIST PRIOR TO PLANTING. PLANTING SHALL TAKE PLACE 24 HOURS TO 48 HOURS AFTER DELIVERY, UNLESS STAGING AREA IS CREATED TO KEEP PLANTS MOIST AND PROTECTED. REMOVE DEAD OR WITHERED ROOTS AND STEMS OF PLUGS WITH A SHARP KNIFE PRIOR TO PLANTING. THOROUGHLY WATER ALL PLANTED AREAS IMMEDIATELY AFTER PLANTING.
11. APPLY 3" OF HEMLOCK MULCH AROUND ALL PLANTED STOCK AFTER PLANTING, CAREFUL TO KEEP MULCH AWAY FROM THE STEMS AND BASES OF PLANTS.
12. SCRUB SHRUB (PSS), FORESTED WETLAND (PFO), STEEP SLOPE, AND ADJACENT ACCESS ROAD AREAS WILL BE HYDROSEEDED WITH WETLAND GRASS SEED MIX. FORESTED UPLAND AND ADJACENT ACCESS ROAD AREAS WILL BE HYDROSEEDED WITH UPLAND GRASS SEED MIX. SEE SPECIFICATIONS FOR SEED MIX AND APPLICATION RATE.

Plant Material Schedule

Stratum	Symbol	Scientific Name	Common Name	Container Size	On Center (O.C.) Spacing	Scrub Shrub (PSS)	Forested Wetland (PFO)	Forested Upland	Steep Slope	Total
Tree										
	AR	*Alnus rubra*	Red alder	1 Gallon	15' O.C.		200			**200**
	FL	*Fraxinus latifolia*	Oregon ash	1 Gallon	15' O.C.		200			**200**
	PC	*Pinus contorta* var. *contorta*	Shore pine	1 Gallon	15' O.C.			300		**300**
	PB	*Populus balsamifera*	Black Cottonwood	1 Gallon	15' O.C.		120	200		**320**
	PM	*Pseudotsuga menziesii*	Douglas fir	1 Gallon	15' O.C.			200		**200**
	SL	*Salix lucida ssp. Lasiandra*	Pacific willow	Live stake	4' O.C.	3030	2750			**5780**
Shrub										
		Cornus sericea	Red osier dogwood	1 Gallon	4' O.C.	1212	1828			**3040**
		Corylus cornuta	Beaked hazelnut	1 Gallon	6' O.C.			315	90	**405**
		Holodiscus discolor	Ocean spray	1 Gallon	6' O.C.			315		**315**
		Mahonia aquifolium	Tall Oregon Grape	1 Gallon	4' O.C.			700	400	**1100**
		Physocarpus capitatus	Pacific ninebark	1 Gallon	4' O.C.		900			**900**
		Ribes sanguineum	Red flowering current	1 Gallon	4' O.C.			700		**700**
		Rosa gymnocarpa	Wood rose	1 Gallon	4' O.C.				700	**700**
		Rosa nutkana	Nootka rose	1 Gallon	4' O.C.		900			**900**
		Salix hookeriana	Hooker's willow	Live stake	4' O.C.	2200	1850			**4050**
		Salix geyeriana	Geyer willow	Live stake	4' O.C.	2200	1850			**4050**
		Salix sitchensis	Sitka willow	Live stake	4' O.C.	2830	1850			**4680**
		Symphoricarpus albus	Snowberry	1 Gallon	4' O.C.			700	700	**1400**
Groundcover										
		Carex amplifolia	Bigleaf sedge	Bare root	12" O.C.	1850	3300			**5150**
		Carex obnupta	Slough sedge	Bare root	12" O.C.	2750	3300			**6050**
		Carex stipata	Sawbeak sedge	Bare root	12" O.C.	2750	4950			**7700**
		Juncus acuminatus	Tapertip rush	Bare root	12" O.C.	3700	6600			**10300**
		Juncus ensifolius	Daggerleaf rush	Bare root	12" O.C.	1850	4950			**6800**
		Juncus tenuis	Slender rush	Bare root	12" O.C.	1850	3300			**5150**
		Schoenoplectus/Scirpus acutus	Hardstem bulrush	Bare root	12" O.C.	1850	3300			**5150**
		Schoenoplectus/Scirpus microcarpus	Small-fruited bulrush	Bare root	12" O.C.	1850	3300			**5150**
Wetland Grass Seed Mix						x	x		x	**10.44 ac**
Upland Grass Seed Mix								x		**4.59 ac**

2200 Sixth Avenue
Suite 1100
Seattle, Washington
98121-1820
206-441-9080
206-441-9108 FAX
HERRERA
http://www.herrerainc.com

NO.	REVISION	BY	DATE

DESIGNED: M.B. | CHECKED: M.E. | KENT PROJECT NO. 08–3017
DRAWN: R.H. | PROJECT ENGR: M.E. | CONST. MGMT. REVIEW
APPROVED: _____ CITY ENGINEER | DATE MAR 2013
SCALE: HORIZ: NOTED VERT: _____
BAR IS ONE INCH ON ORIGINAL DRAWING ADJUST SCALES ACCORDINGLY 0" 1"

City of Kent
Public Works Department
Engineering Division

PLANTING SCHEDULE AND NOTES

DOWNEY FARMSTEAD RESTORATION

SHEET P–3 OF 29
FILE NO. 0817P03

Path: P:\Proj\Y2011\11-05022-000 Downey Farmstead\CAD\Dwgs\0817P03.dwg
Plot Date:11/8/2013 1:24 PM Cad User:Richmond Hulme
Plot Style Table:Newkenthalf.ctb Plotter:DWG To PDF.pc3

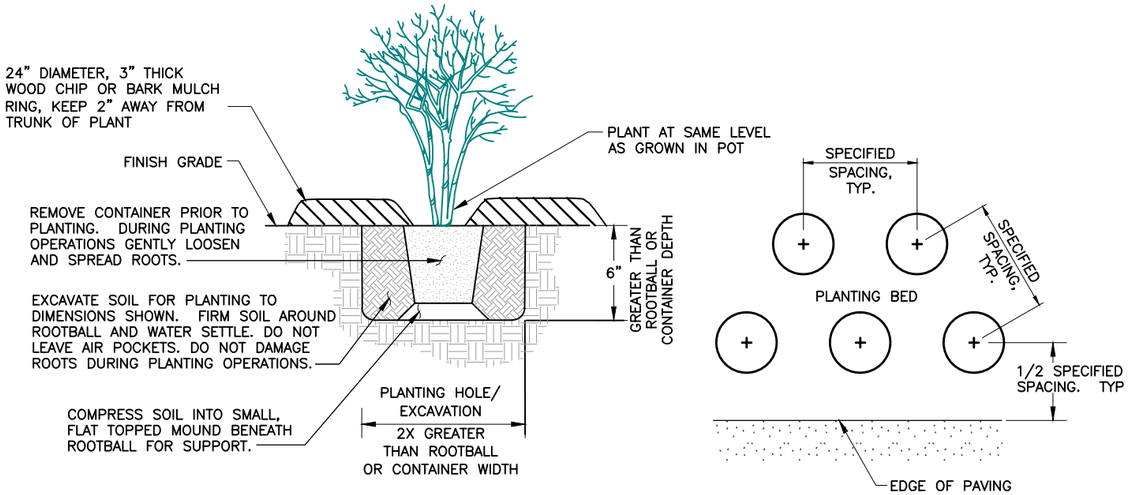

TREE AND SHRUB PLANTING DETAIL (1 / –)

SCALE: NONE

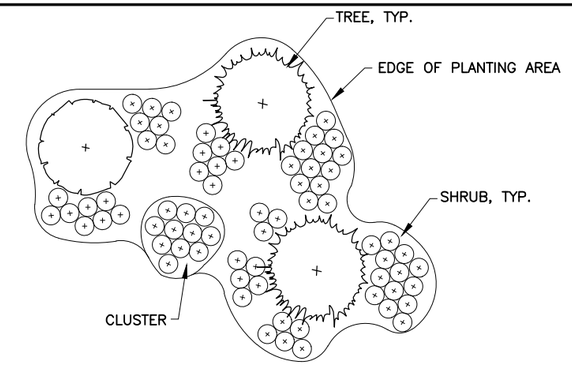

NOTES:

1. PLANT SHRUBS IN CLUSTERS OF UNEVEN NUMBERS (E.G. THREE, FIVE, SEVEN, ETC.)
2. PLANT ONE SPECIES OF SHRUBS IN CLUSTERS OF THREE, FIVE, SEVEN, ETC.
3. EVENLY SPACE CLUSTERS THROUGHOUT PLANTING AREA.
4. INTENT OF SHRUB PLANTING IS TO APPEAR NATURAL AND INFORMAL.

SHRUB SPACING AROUND TREES DETAIL (2 / –)

SCALE: NONE

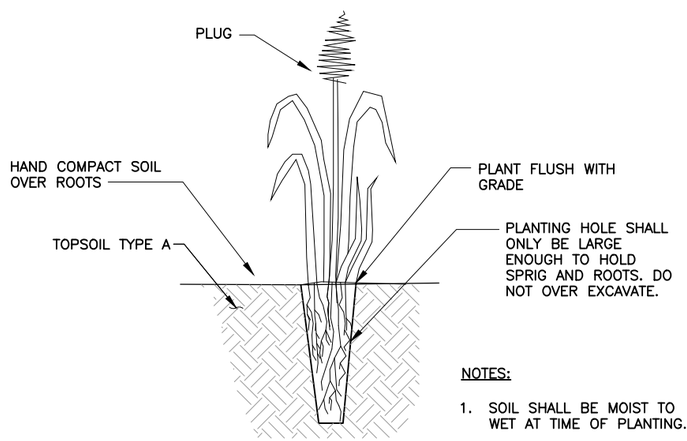

NOTES:

1. SOIL SHALL BE MOIST TO WET AT TIME OF PLANTING.

PLUG INSTALLATION DETAIL (3 / –)

SCALE: NONE

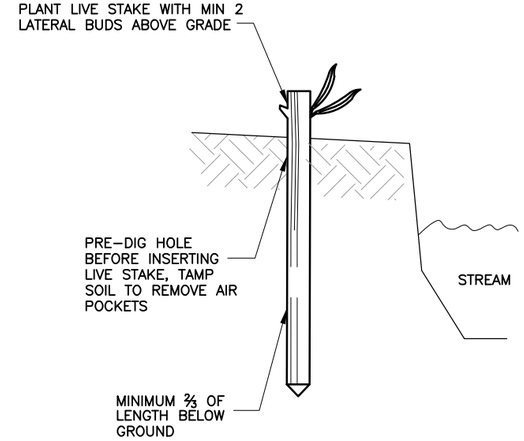

NOTES:

1. PLANT STAKE MUST COME INTO CONTACT WITH GROUNDWATER.

LIVE STAKE PLANTING DETAIL (4 / –)

SCALE: NONE

2200 Sixth Avenue
Suite 1100
Seattle, Washington
98121-1820
206-441-9080
206-441-9108 FAX
http://www.herrerainc.com

NO.	REVISION	BY	DATE

DESIGNED: M.B. | CHECKED: M.E. | KENT PROJECT NO. 08-3017 | SCALE: HORIZ: NOTED, VERT:
DRAWN: R.H. | PROJECT ENGR: M.E. | CONST. MGMT. REVIEW
APPROVED: _____ CITY ENGINEER | DATE MAR 2013

BAR IS ONE INCH ON ORIGINAL DRAWING ADJUST SCALES ACCORDINGLY 0" 1"

City of Kent
Public Works Department
Engineering Division

PLANTING DETAILS

DOWNEY FARMSTEAD RESTORATION

SHEET P-4 OF 29
FILE NO. 0817P04

Path: P:\Proj\Y2011\11-05022-000 Downey Farmstead\CAD\Dwgs\0817P04.dwg
Plot Date: 11/8/2013 1:24 PM Cad User: Richmond Hulme
Plot Style Table: Newkenthalf.ctb Plotter: DWG To PDF.pc3

APPENDIX B

Hydraulic Scour Analysis Results

Input Date : 26-Sep-13
Designer : MB/GK

INPUT SUMMARY FOR LOCAL PIER SCOUR
FOR TYPE 1,2 HABITAT STRUCTURES

INPUT VARIABLES FOR CALCULATIONS			
existing depth in contracted section before scour=	y_0=	25.00	ft
average depth in upstream main channel=	y_1=	25.00	ft
pier length=	L=	15	ft
pier width=	b=	10	ft
correction factor for pier nose shape=	K_1=	1.1	
angle of attack=	θ=	0	degrees
correction factor for bed condition=	K_3=	1.1	
velocity of approach flow upstream of pier=	V=	4.00	ft/s
median diameter of bed material=	D_{50}=	3	mm
grain size for which 95% of bed material is finer=	D_{95}=	5	mm
diameter of smallest nontransportable particle in bed material=	D_m=	3.75	mm
shape factor=	K_s=	1.1	
acceleration of gravity=	g=	32.2	ft/s^2
Chinese Equation shape factor=	$K_{s(ch)}$=	1.0	

OUTPUT SUMMARY FOR LOCAL PIER SCOUR
FOR TYPE 1,2 HABITAT STRUCTURES

Output Summary Table		
Colorado State University equation [FHWA 2001]	**14.36**	ft
CSU with Johnson and Torrico correction factor [FHWA 2001]	14.16	ft
Simplified Chinese Equation	**8.60**	ft
Average	12.37	ft

average includes CSU and Chinese equations only

LOCAL PIER SCOUR (In-Stream Structures)

INPUT Parameters

existing depth in contracted section before scour=	y_0=	7.62	m
average depth in upstream main channel=	y_1=	7.62	m
pier length=	L=	4.57	m
pier width=	a=	3.05	m
correction factor for pier nose shape=	K_1=	1.1	
angle of attack=	θ=	0	degrees
correction factor for bed condition=	K_3=	1.1	
velocity of approach flow upstream of pier=	V=	1.22	m/s
median diameter of bed material=	D_{50}=	0.003	m
grain size for which 95% of bed material is finer=	D_{95}=	0.005	m
diameter of smallest nontransportable particle in bed material=	D_m=	0.004	m
shape factor=	K_s=	1.1	
acceleration of gravity=	g=	9.81	m/s^2
Chinese Equation shape factor=	$K_{s(ch)}$=	1.0	

Colorado State University equation [FHWA 2001] with Mueller K4 correction

$$\frac{d_{ps}}{y_1} = 2.0K_1K_2K_3K_4\left(\frac{a}{y_1}\right)^{0.65} Fr^{0.43}$$

$$\frac{d_{ps}}{a} = 2.0K_1K_2K_3K_4\left(\frac{y_1}{a}\right)^{0.35} Fr^{0.43}$$

$$K_2 = [\cos\theta + (L/a)\sin\theta]^{0.65}$$ If L/a is larger than 12, use L/a=12 as maximum

Bed Condition	Dune Height (m)	K_3
Clear-water scour	N/A	1.1
Plane bed and antidune flow	N/A	1.1
Small dunes	3>H>=0.6	1.1
Medium dunes	9>H>=3	1.1-1.2
Large dunes	H>=9	1.3

K_4=1 , if D_{50}< 2mm, D_{95} <20mm

$$K_4 = 0.4(V_r)^{0.15}$$

$$Fr = V/\sqrt{gy_1}$$

$$V_{cD_x} = 6.19\, y_1^{1/6} D_x^{1/3}$$

$$V_{icD_x} = 0.645\left(\frac{D_x}{a}\right)^{0.053} V_{cD_x}$$

$$V_r = \frac{V - V_{icD_{50}}}{V_{cD_{50}} - V_{icD_{50}}} > 0$$

Johnson and Torrico correction for wide piers [FHWA 2001]

Should be applied when:
1. Depth of flow/pier width < 0.8
2. Pier width/d_{50} >50
3. Fr <1 (subcritical)

ratio of flow depth to pier width, y/a =	2.5	CSU equation is adequate
ratio of pier width to D_{50}=	1016	
Froude Number=	0.14	

$$K_w = 2.58\left(\frac{y}{a}\right)^{0.34} Fr^{0.65}$$ for live-bed (V/Vc < 1)

$$K_w = 1.0\left(\frac{y}{a}\right)^{0.13} Fr^{0.25}$$ for clear-water (V/Vc >= 1)

$$\frac{d_{ps}}{y_1} = 2.0K_1K_2K_3K_4K_w\left(\frac{a}{y_1}\right)^{0.65} Fr^{0.43}$$

OUTPUT

local scour depth for wide pier (live bed)=	**d_{wpsl}=**	**4.32**	**m**
local scour depth for wide pier (clear-water)=	d_{wpsc}=	3.02	m

Simplified Chinese Equation

$$y_S = 1.141\, K_{s(CH)}\, a^{0.6}\, y_O^{0.15}\, D_{50}^{-0.07}\left(\frac{V_o - V_{ic}}{V_c - V_{ic}}\right) \quad \textit{for clear bed scour}$$

$$y_S = 0.95\, K_{s(CH)}\, a^{0.6}\, y_O^{0.15}\, D_{50}^{-0.07}\left(\frac{V_o - V_{ic}}{V_c - V_{ic}}\right)^C \quad \textit{for live-bed scour}$$

For non-uniform sediment

$$V_c = 3.28\left(\frac{y_0}{D_{50}}\right)^{0.14}\left(8.85\, D_{50} + 6.05E^{-7}\left[\frac{10 + 0.3048\, y_o}{(0.3048\, D_{50})^{0.72}}\right]\right)^{0.5}$$

for armored bed: $d_{50}=d_{50a}$

$$V_{ic} = 0.645\left(\frac{D_{50}}{a}\right)^{0.053} V_c \qquad c = \left(\frac{V_C}{V_o}\right)^{8.20 + 2.23\log D_{50}}$$

UNIT CONVERSIONS

if y/a>2.6	pier width (m)	3.05	converted to English units (ft)	10.0
if y/a<2.6	water depth yo (m)	7.62	converted to English units (ft)	25.0
	D50 (m)	0.003	converted to English units (ft)	0.010
coarse sediment (a/d_{50}<25)	Vo (m/s)	1.22	converted to English units (ft/s)	4.00
fine sediment (a/d_{50}>25) K_d=1.0				

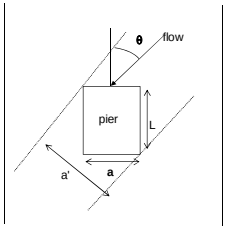

where a' = width of structure project normal to flow > a, therefore K2 will increase when flow hits structure obliquely

OUTPUT

correction factor for angle of attack=	K_2=	1.00	
critical velocity for incipient motion of D_{50}=	V_{cD50}=	1.25	m/s
critical velocity for incipient motion of D_{95}=	V_{cD95}=	1.48	m/s
approach velocity required to initiate scour for grain size D_{50}=	V_{icD50}=	0.56	m/s
approach velocity required to initiate scour for grain size D_{95}=	V_{icD95}=	0.68	m/s
correction factor for armoring by bed material size=	K_4=	1.00	
Froude number directly upstream of pier, =	Fr=	0.14	
local pier scour depth=	**d_{ps}=**	**4.38**	**m**
local pier scour depth=	**d_{ps}=**	**14.36**	**ft**

OUTPUT

critical velocity for incipient motion of D_{50}=	V_c=	2.91	ft/s
approach velocity required to initiate scour for grain size D_{50}=	V_{ic}=	1.30	ft/s
Live scour exponent (c)	c =	0.31	
local pier scour depth=	**y_s=**	**8.60**	**ft**
local pier scour depth=	**y_s=**	**2.62**	**m**

Output Summary:
Small ELJs

Velocity	(m/sec)	1.22
Structure Width	(m)	3.05
Sediment Size =	D50	0.0030
	D95	0.0050

Output Summary Table	
Colorado State University equation [FHWA 2001]	4.38 m
CSU with Johnson and Torrico correction factor [FHWA 2001]	4.32 m
Simplified Chinese Equation	2.62 m

Average	3.77 m
	12.37 feet

Input Date : 12-Mar-13
Designer : MB

INPUT SUMMARY FOR LOCAL PIER SCOUR
FOR TYPE 3 ELJ STRUCTURES

INPUT VARIABLES FOR CALCULATIONS			
existing depth in contracted section before scour=	y_0=	25.00	ft
average depth in upstream main channel=	y_1=	25.00	ft
pier length=	L=	50	ft
pier width=	b=	40	ft
correction factor for pier nose shape=	K_1=	1.1	
angle of attack=	θ=	0	degrees
correction factor for bed condition=	K_3=	1.1	
velocity of approach flow upstream of pier=	V=	4.00	ft/s
median diameter of bed material=	D_{50}=	3	mm
grain size for which 95% of bed material is finer=	D_{95}=	5	mm
diameter of smallest nontransportable particle in bed material=	D_m=	3.75	mm
shape factor=	K_s=	1.1	
acceleration of gravity=	g=	32.2	ft/s^2
Chinese Equation shape factor=	$K_{s(ch)}$=	1.0	

OUTPUT SUMMARY FOR LOCAL PIER SCOUR
FOR TYPE 3 ELJ STRUCTURES

Output Summary Table		
Colorado State University equation [FHWA 2001]	35.36	ft
CSU with Johnson and Torrico correction factor [FHWA 2001]	**21.76**	ft
Simplified Chinese Equation	**19.62**	ft
Average	20.69	ft

average includes width corrected CSU and Chinese equations only

LOCAL PIER SCOUR (In-Stream Structures)

INPUT Parameters

existing depth in contracted section before scour=	y_0=	7.62	m
average depth in upstream main channel=	y_1=	7.62	m
pier length=	L=	15.24	m
pier width=	a=	12.19	m
correction factor for pier nose shape=	K_1=	1.1	
angle of attack=	θ=	0	degrees
correction factor for bed condition=	K_3=	1.1	
velocity of approach flow upstream of pier=	V=	1.22	m/s
median diameter of bed material=	D_{50}=	0.003	m
grain size for which 95% of bed material is finer=	D_{95}=	0.005	m
diameter of smallest nontransportable particle in bed material=	D_m=	0.004	m
shape factor=	K_s=	1.1	
acceleration of gravity=	g=	9.81	m/s^2
Chinese Equation shape factor=	$K_{s(ch)}$=	1.0	

Colorado State University equation [FHWA 2001] with Mueller K4 correction

$$\frac{d_{ps}}{y_1} = 2.0K_1K_2K_3K_4\left(\frac{a}{y_1}\right)^{0.65} Fr^{0.43}$$

$$\frac{d_{ps}}{a} = 2.0K_1K_2K_3K_4\left(\frac{y_1}{a}\right)^{0.35} Fr^{0.43}$$

$$K_2 = [\cos\theta + (L/a)\sin\theta]^{0.65}$$ If L/a is larger than 12, use L/a=12 as maximum

Bed Condition	Dune Height (m)	K_3
Clear-water scour	N/A	1.1
Plane bed and antidune flow	N/A	1.1
Small dunes	3>H>=0.6	1.1
Medium dunes	9>H>=3	1.1-1.2
Large dunes	H>=9	1.3

$$V_{cD_x} = 6.19\, y_1^{1/6} D_x^{1/3}$$

K_4=1 , if D_{50}< 2mm, D_{95} <20mm

$$K_4 = 0.4(V_r)^{0.15}$$

$$V_{icD_x} = 0.645\left(\frac{D_x}{a}\right)^{0.053} V_{cD_x}$$

$$Fr = V/\sqrt{gy_1}$$

$$V_r = \frac{V - V_{icD_{50}}}{V_{cD_{50}} - V_{icD_{95}}} > 0$$

Johnson and Torrico correction for wide piers [FHWA 2001]

Should be applied when:
1. Depth of flow/pier width < 0.8
2. Pier width/d_{50} >50
3. Fr <1 (subcritical)

ratio of flow depth to pier width, y/a =	0.625	**use Johnson & Torrico correction**
ratio of pier width to D_{50}=	4064	
Froude Number=	0.14	

$$K_w = 2.58\left(\frac{y}{a}\right)^{0.34} Fr^{0.65}$$ for live-bed (V/Vc < 1)

$$K_w = 1.0\left(\frac{y}{a}\right)^{0.13} Fr^{0.25}$$ for clear-water (V/Vc >= 1)

$$\frac{d_{ps}}{y_1} = 2.0K_1K_2K_3K_4K_w\left(\frac{a}{y_1}\right)^{0.65} Fr^{0.43}$$

OUTPUT

local scour depth for wide pier (live bed)=	**d_{wpsl}=**	**6.63**	**m**
local scour depth for wide pier (clear-water)=	d_{wpsc}=	6.21	m

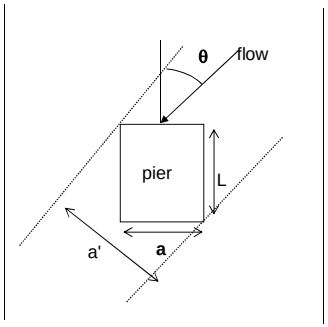

OUTPUT

correction factor for angle of attack=	K_2=	1.00	
critical velocity for incipient motion of D_{50}=	V_{cD50}=	1.25	m/s
critical velocity for incipient motion of D_{95}=	V_{cD95}=	1.48	m/s
approach velocity required to initiate scour for grain size D_{50}=	V_{icD50}=	0.52	m/s
approach velocity required to initiate scour for grain size D_{95}=	V_{icD95}=	0.63	m/s
correction factor for armoring by bed material size=	K_4=	1.00	
Froude number directly upstream of pier, =	Fr=	0.14	
local pier scour depth=	**d_{ps}=**	**10.78**	**m**
local pier scour depth=	**d_{ps}=**	**35.36**	**ft**

where a' = width of structure project normal to flow > a, therefore K2 will increase when flow hits structure obliquely

APPENDIX C

Large Wood Structure Vertical Stability Calculations

Downey Farmstead - Engineered Log Jam Pile Sizing
Buoyancy Calculation - Habitat Structure Type 1

Spreadsheet calculations by: AR Date: 3/19/2013
Calculations checked by: MB Date: 9/25/2013

Approach is from D'Aoust and Millar (2000). Modified for this analysis

Logs and Rocks are grouped and analysed as a unit. The calculations could be refined to consider individual lifts of logs and balast.

Determine: FS_B - Factor of safety buoyancy of engineered logjam structure

$$FS_B = \frac{\Sigma W'}{\Sigma F_{BL} + \Sigma F_{LB}}$$

W' = Immersed weight of ballast
F_{BL} = Net Buoyancy force on Logs
F_{LB} = Vertical lift forces acting on woody debris

1. Calculate total volume of ELJ

Dimensions

Area =	26	ft^2	x-sec Area
Length =	10	ft	Horizontal length
Volume =	261	ft^3	

2. Calculate volume of woody debris from log schedule

Log Type	Length (ft)	Diameter (in)	Rootwad Diam (ft)	Rootwad Thick (ft)	Volume (ft^3)	Number	Extended Volume (ft^3)
PILE 2	30	12	0	0	24	2	47
L	15	18	3	1	34	3	101
M	10	18	3	1	25	1	25

Total Volume Logs = 125 ft^3 Not including piles

3. Calculate Buoyancy Force on Logs

$F_{BL} = V_w * \gamma * (1 - S_L)$

V_B = Total volume logs
γ = unit weight of water 62.4 lb/ft^3
S_L = specific gravity of logs (0.5 used for Douglas Fir)

F_{BL} = 3915 lb up

Volume voids = Total Volume - Volume Logs = 136 ft^3

4. Calculate W' for ballast

W' = W - F_{BB}
W = Weight of ballast
F_{BB} = Buoyancy force on ballast

$W = V_B * \gamma$

Volume Ballast = % voids * Volume voids - assumes light loose riprap chinked with quarry spalls. Assume 20% voids varris for contingency to 40% Volume Ballast Multiplier

Sensitivity Analysis

20% voids		**0.8**		**40% voids**		**0.6**	
V_B =		108	ft^3	V_B =		81	ft^3
γ = unit weight of ballast		132.00	lb/ft^3	γ = unit weight of ballast		132.00	lb/ft^3
W =	14312	lb	down	W =	10734	lb	down
F_{BB} =	$V_B * \gamma$			F_{BB} =	$V_B * \gamma$		
F_{BB} =	6766	lb	up	F_{BB} =	5074	lb	up
W' =	7546	lb	down	W' =	5660	lb	down

7. FS calculation

$$FS_B = \frac{\Sigma W'}{\Sigma F_{BL} + \Sigma F_{LB}}$$

FS_B = 1.93 1.45

Downey Farmstead - Engineered Log Jam Pile Sizing
Buoyancy Calculation - Habitat Structure Type 2

Spreadsheet calculations by: AR Date: 3/19/2013
Calculations checked by: MB Date: 9/25/2013

Approach is from D'Aoust and Millar (2000). Modified for this analysis

Logs and Rocks are grouped and analysed as a unit. The calculations could be refined to consider individual lifts of logs and balast.

Determine: FS_B - Factor of safety buoyancy of engineered logjam structure

$$FS_B = \frac{\Sigma W'}{\Sigma F_{BL} + \Sigma F_{LB}}$$

W' = Immersed weight of ballast
F_{BL} = Net Buoyancy force on Logs
F_{LB} = Vertical lift forces acting on woody debris

1. Calculate total volume of ELJ

Dimensions

Area =	12.5	ft^2	x-sec Area
Length =	20	ft	Horizontal length
Volume =	250	ft^3	

2. Calculate volume of woody debris from log schedule

Log Type	Length (ft)	Diameter (in)	Rootwad Diam (ft)	Rootwad Thick (ft)	Volume (ft^3)	Number	Extended Volume (ft^3)
J	20	18	3	1	42	3	127
PILE 2	30	12	0	0	24	2	47

Total Volume Logs = 127 ft^3 Not including piles

3. Calculate Buoyancy Force on Logs

$F_{BL} = V_w * \gamma * (1 - S_L)$

V_B = Total volume logs
γ = unit weight of water 62.4 lb/ft^3
S_L = specific gravity of logs (0.5 used for Douglas Fir)

F_{BL} = 3970 lb up

Volume voids = Total Volume - Volume Logs = 123 ft^3

4. Calculate W' for ballast

W' = W - F_{BB}
W = Weight of ballast
F_{BB} = Buoyancy force on ballast

$W = V_B * \gamma$
Volume Ballast = % voids * Volume voids - assumes light loose riprap chinked with quarry spalls. Assume 20% voids varris for contingency to 40%
Volume Ballast Multiplier

Sensitivity Analysis

20% voids	**0.8**			**40% voids**	**0.6**		
V_B =	98	ft^3		V_B =	74	ft^3	
γ = unit weight of ballast	132.00	lb/ft^3		γ = unit weight of ballast	132.00	lb/ft^3	
W =	12964	lb	down	W =	9723	lb	down
F_{BB} =	$V_B*\gamma$			F_{BB} =	$V_B*\gamma$		
F_{BB} =	6128	lb	up	F_{BB} =	4596	lb	up
W' =	6836	lb	down	W' =	5127	lb	down

5. FS calculation

$$FS_B = \frac{\Sigma W'}{\Sigma F_{BL} + \Sigma F_{LB}}$$

removing vertical lift estimate:
FS_B = 1.72 1.29

Downey Farmstead - Engineered Log Jam Pile Sizing
Buoyancy Calculation - Type 3

Spreadsheet calculations by: AR Date: 3/19/2013
Calculations checked by: MB Date: 8/27/2013

Approach is from D'Aoust and Millar (2000). Modified for this analysis

Logs and Rocks are grouped and analysed as a unit. The calculations could be refined to consider individual lifts of logs and balast.
Pile uplift load also analyzed

Determine: FS_B - Factor of safety buoyancy of engineered logjam structure

$$FS_B = \frac{\Sigma W'}{\Sigma F_{BL} + \Sigma F_{LB}}$$

W' = Immersed weight of ballast
F_{BL} = Net Buoyancy force on Logs
F_{LB} = Vertical lift forces acting on woody debris

1. Calculate total volume of ELJ

Dimensions

Area =	2000	ft^2
Height =	20	ft
Volume =	40000	ft^3

2. Calculate volume of woody debris from log schedule

Log Type	Length (ft)	Diameter (in)	Rootwad Diam (ft)	Rootwad Thick (ft)	Volume (ft^3)	Number	Extended Volume (ft^3)
A	25	16	3.6	1	45	6	269
B	25	18	0	0	44	6	265
C	25	18	4	0	44	10	442
D	30	18	4	1	66	5	328
E	35	18	0	1	62	4	247
F	35	18	4	0	62	5	309
G	40	18	4	0	71	4	283
H	40	18	0	1	71	5	353
I	45	18	0	1	80	2	159
PILE	40	14	0	0	43	18	770

Total Volume Logs = 3425 ft^3 From

3. Calculate Buoyancy Force on Logs

F_{BL} = $V_w*\gamma*(1-S_L)$
V_B = Total volume logs
γ = unit weight of water 62.4 lb/ft^3
S_L = specific gravity of logs (0.5 used for Douglas Fir)

F_{BL} = 106870 lb up

4. Calculate volume of voids to be filled with ballast
Volume voids = Total Volume - Volume Logs = 36575 ft^3

5. Calculate W' for ballast
W' = W - F_{BB}
W = Weight of ballast
F_{BB} = Buoyancy force on ballast

W = $V_B * \gamma$
Volume Ballast = % voids * Volume voids - assumes light loose riprap chinked with quarry spalls. Assume 20% voids varris for contingency to 40%
Volume Ballast Multiplier

Sensitivity Analysis

20% voids		**0.8**		**40% voids**		**0.6**	
V_B =		29260	ft^3	V_B =		21945	ft^3
γ = unit weight of ballas		69.40	lb/ft^3	γ = unit weight of ballas		69.40	lb/ft^3
W =	2030626	lb	down	W =	1522969	lb	down
F_{BB} =	$V_B*\gamma$			F_{BB} =	$V_B*\gamma$		
F_{BB} =	1825807	lb	up	F_{BB} =	1369356	lb	up
W' =	204818	lb	down	W' =	153614	lb	down

Note: 132 pcf is a dry density value. A submerged value needs to be used here, which would be 132 - 62.4 = 69.4 pcf

6. FS calculation

$$FS_B = \frac{\Sigma W'}{\Sigma F_{BL} + \Sigma F_{LB}}$$

FS_B = 1.92 1.44

7. Ballast by Timber Piles

F_{BL} = 106870 lb up

Lpile = 40000 lb max uplift load per pile
npile = 11 ea

FS = 4.12

Pile Buoyancy Calculations (Pull Out)
Large Apex ELJ

user input

Spreadsheet developed by:	GK		
Spreadsheet calculations by:	AR	Date:	Mar-13
Calculations modified/checked by:	GK	Date:	Sep-13
Calculations modified/checked by:	MB	Date:	Nov-13
Project No. 11-05022-000			
Based on design by	MB	Sep-13	
Location	Downey Farmstead		

Angle of internal friction for substrate	ϕ	36	degrees	
Dry density of substrate	γ_d	120	lb/ft^3	
Saturated unit weight of substrate	γ_{sat}	134	lb/ft^3	From Table 3.1 "Principles of Geotechnical Engineering" 5th Edition, Das
depth of water at Q_{100}	d_1	14.0	ft	does not include scour depth
Specific gravity of logs	SG_{log}	0.5		
Specific weight of water	γ_w	62.4	lb/ft^3	
Density of water	ρ_w	1.94	$slugs/ft^3$	
Scour Depth		19.00	Ft	
Pile Length =	Pl	55.00	ft	
Chosen Pile Diameter =		1.33	ft	
Pile Diameter * 20=		26.67		
Choose Embedment depth W/ Scour =		19.00	ft	
Number of piles to be lashed =		16		

From (Pile foundations in Engineering Practice, Prakash, Sharma page 306) the value of Ks should be Multiplied by 2/3 for pullout

$$Q_f = pK_s \tan\delta\ \Sigma(\sigma'_{vl}\ \Delta L)$$

Sum from L = 0 to L = L

where

σ'_{vl} = average vertical effective stress in a given layer

Note σ'_{vl} increases with depth until 20 times the diameter when it is assumed to be constant

δ = angle of wall friction, based on pile material and ϕ'

K_s = earth pressure coefficient

p = perimeter of pile

Values of K_s and δ can be related to the angle of internal friction (ϕ') using the following table according to Broms.

Material	δ	K_s low Soil density	K_s high Soil density
steel	20°	0.5	1
concrete	3/4 ϕ'	1	2
timber	2/3 ϕ'	1.5	4

Assumed Ks = 2.5 Check geotech report for density descriptions or available literature

From (Pile foundations in Engineering Practice, Prakash, Sharma page 306) the value of Ks should be **Multiplied by 2/3** for pullout

Allowable Pullout Capacity can be written

$$P_f = 1/FS[2/3pK_s \tan\delta\ \Sigma(\sigma'_{vl}\ \Delta L)] + Wp$$

FS = Factor of Safety (usually taken as 3)
Wp = Weight of Pile

Max Poor Water Pressure =	1,186	lbs/ft^2	Consistent with equation poor water pressure is "capped" at 20*dia
Average Poor Water Pressure =	593	lbs/ft^2	Average Poor Water Pressure for Pressure Prism Above Depth of Pile < 20* Dia
Max Soil Overburden=	2,554	lbs/ft^2	
Average Soil Overburden =	1,277	lbs/ft^2	
Submerged Weight of Pile =	-2,396	lbs	Assumes pile completely submerged
$\Sigma(\sigma'_{vl}\ \Delta L)$	12,996	lb-ft	Effective vertical stress over the length of pile embedment
Pf =	-38,000	lbs/pile	Does not Account for FS of 3 as outlined above, See results below for FS and assess FS for structure risk and purpose
Buoyant Force of Structure =	-100,000	lbs	Includes all key logs and racking logs in structure
Buoyant Load Per Pile =	-6,250	lbs	
FS =	6.08		FS for pile pullout at scour and flow depth event when pile is lashed to horizontal key logs and structure buoyant force is assumed to be uniformly distributed to each lashed pile, and that lashing does not fail

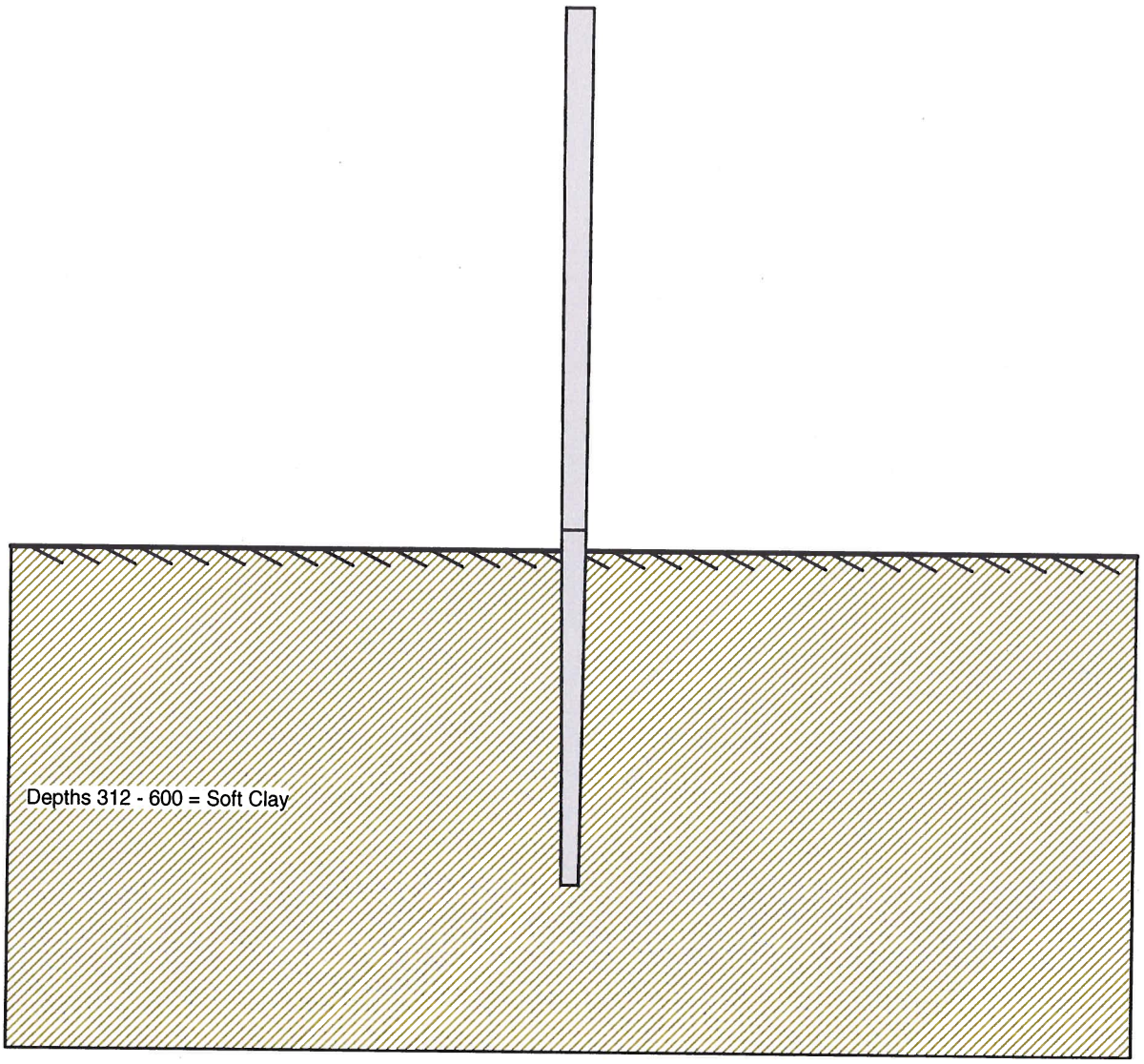

LPile Plus for Windows 5.0.38, (c) 2006 by Ensoft, Inc.

Bending Moment vs. Depth

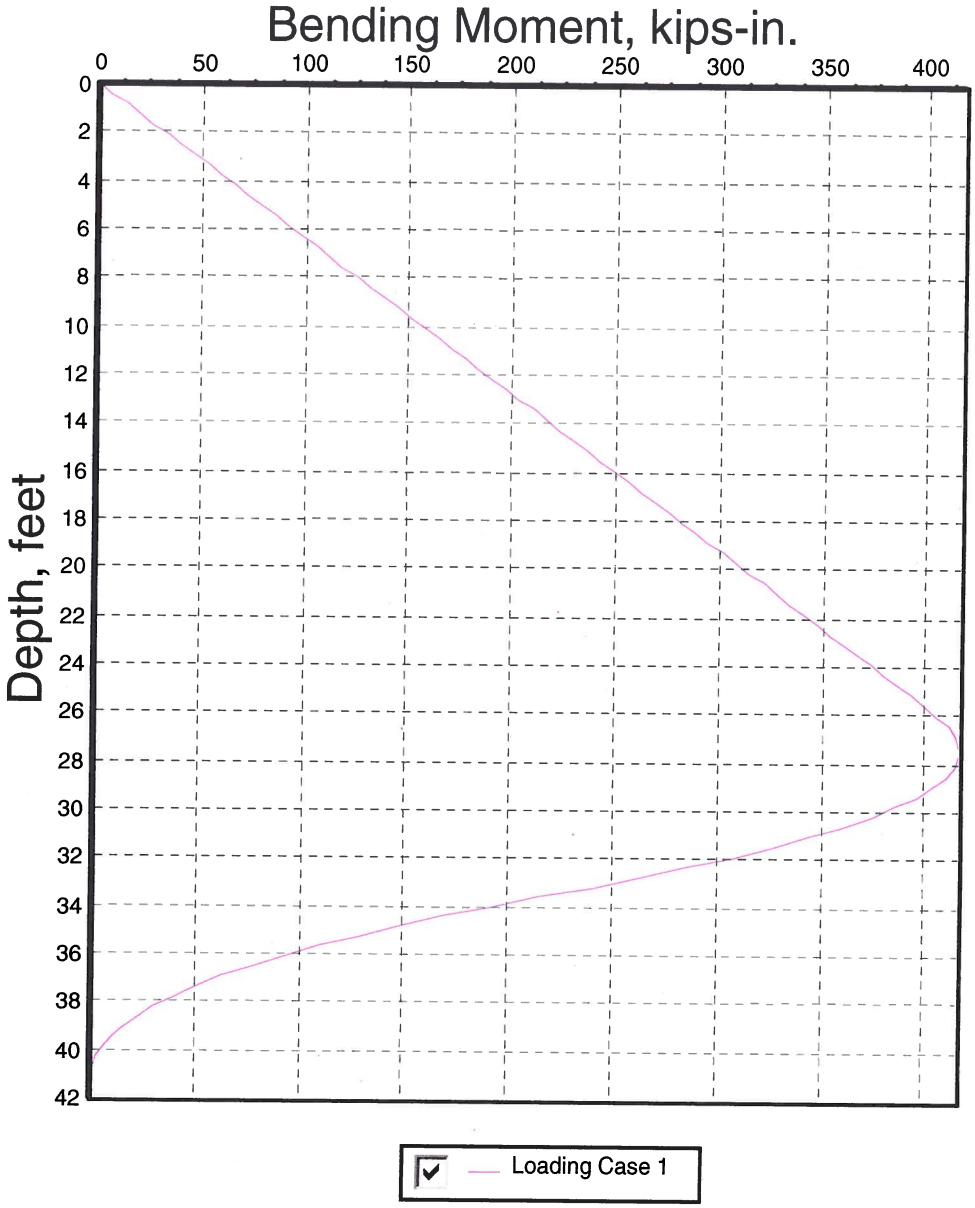

LPILE Plus 5.0, (c) 2007 by Ensoft, Inc.

Shear Force vs. Depth

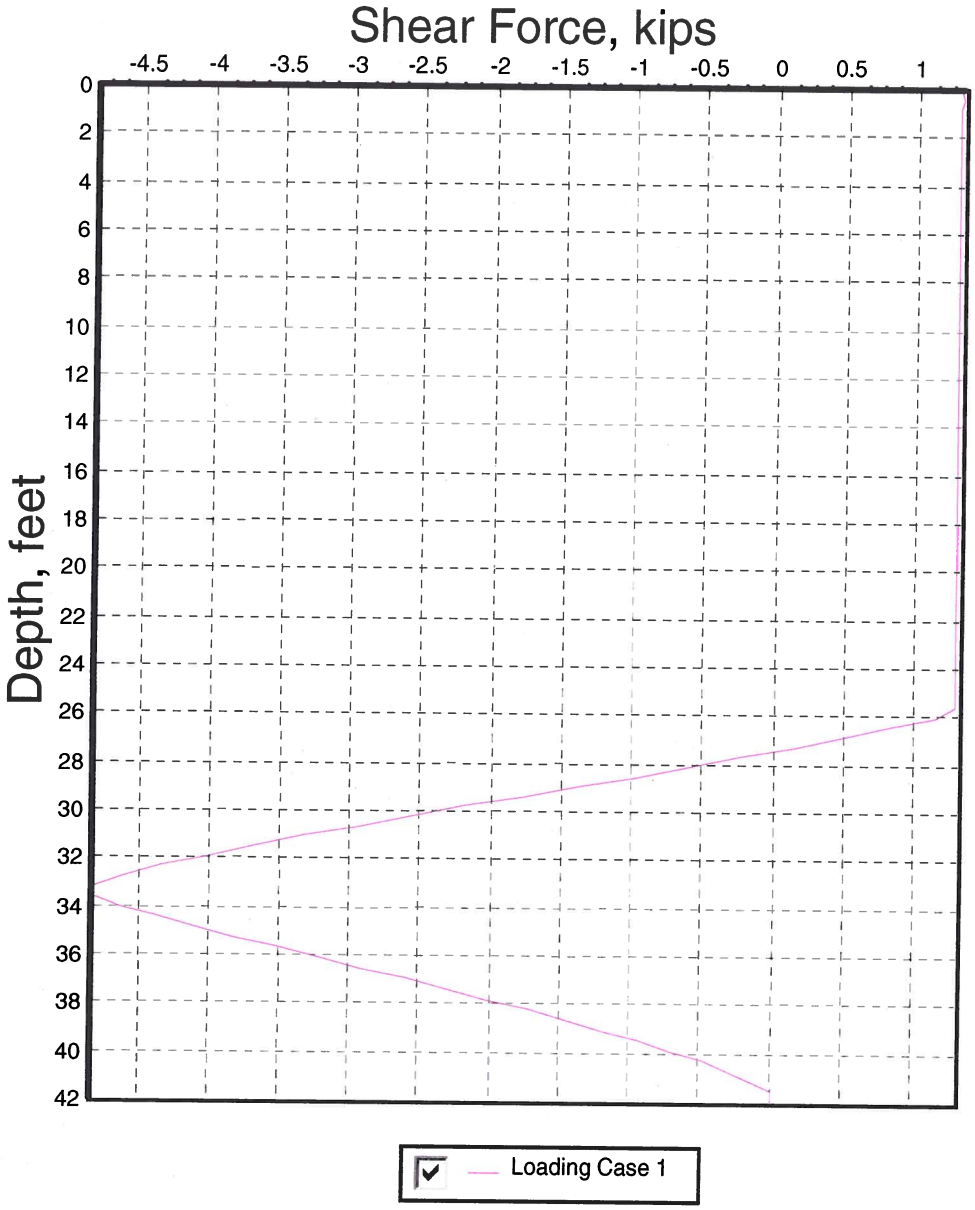

LPILE Plus 5.0, (c) 2007 by Ensoft, Inc.

Lateral Deflection vs. Depth

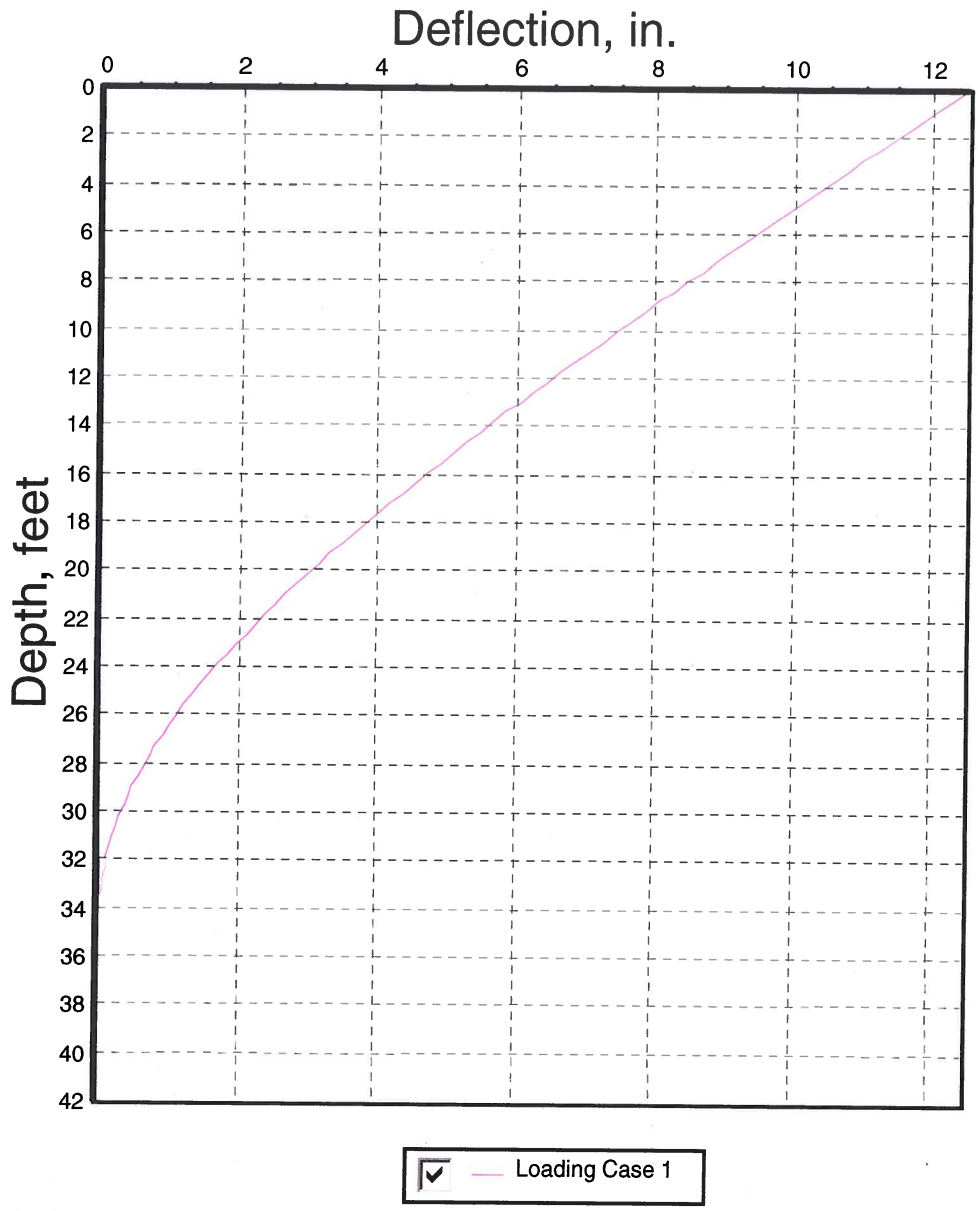

LPILE Plus 5.0, (c) 2007 by Ensoft, Inc.