PUGET SOUND
NEARSHORE
ECOSYSTEM RESTORATION PROJECT

Puget Sound Nearshore Ecosystem Restoration Project

Strategic Restoration Conceptual Engineering — Final Design Report

March 2011

DESIGN TEAM
ESA (Lead Contractor), ESA PWA, Anchor QEA, Coastal Geologic Services, KPFF, and Pacific Survey & Engineering

Puget Sound Nearshore Ecosystem Restoration Project

Strategic Restoration Conceptual Engineering – Design Report

FINAL
March 2011

Cover photo: Lilliwaup Estuary (ESA)

Table of Contents

Introduction v
Background 1
Selection and Screening of Candidate Restoration Actions 2
Restoration Design within PSNERP's Framework 8
Definition of Conceptual (10%) Design 9
Definition of Full Restoration 10
Definition of Partial Restoration 12
Report Organization and Design Assumptions 12
Design Elements Common to All Actions 13
Rail, Roadway, and Bridge Standards 13
Public Outreach and Property Acquisition 15
Regulatory Compliance and Permitting 16
Sea Level Change Risk Analysis 17
Cultural/Historical Resources, Contaminant Surveys, and Endangered Species Act Consultation 17
Monitoring 18
Adaptive Management 19
Operations and Maintenance 20
Approach to Quantity Estimation 20
Applied Geomorphology Guidelines and Hierarchy of Openings 21
References 21

Tables

Table 1. PSNERP's Candidate Restoration Actions, Local Proponents, and CDT Lead Designer 4
Table 2. Description of PSNERP's Restoration Strategies for Puget Sound 6
Table 3. Screening Criteria Used to Identify Actions that are Suitable for 10% Design 7
Table 4. Full Restoration Objectives, Target Processes, and Associated Management Measures 11
Table 5. Methods for Establishing Bridge Elevations for 10% Design 13
Table 6. In-Water Work Windows for Estuarine/ Saltwater Habitats in Puget Sound 16
Table 7. Puget Sound Nearshore Sea Level Change Analysis (centimeters increase (+) during the period of analysis, 2015 – 2065) 17
Table 8. Standard Monitoring Parameters Used to Denote Key Performance Indicators 18

Figures

Figure 1. Location of PSNERP Candidate Restoration Actions

Chapters

1. Beaconsfield Feeder Bluff Restoration (#1499)
2. Big Beef Causeway Replacement and Estuary Restoration (#1256)
3. Big Quilcene River Restoration (#1076, 1074, 1077, 1078)
4. Chambers Bay Estuarine and Riparian Enhancement (#1801)
5. Chuckanut Estuary Restoration (#1642)
6. Deepwater Slough Phase 2 (#1101)
7. Deer Harbor Estuary Restoration (#1648)
8. Deschutes River Estuary Restoration (#1003)
9. Duckabush Causeway Replacement and Estuary Restoration (#1012)
10. Dugualla Bay Restoration (#1609)
11. Everett Marshland Tidal Wetland Restoration (#1126)
12. Everett Riverfront Wetland Complexes (#1127)
13. Hamma Hamma Causeway Replacement and Estuary Restoration (#1047)
14. Harper Estuary Restoration Design and Construction (#1505)
15. John's Creek Estuary Restoration Project (#1447)
16. Kilisut Harbor / Oak Bay Reconnection (#1552)
17. Lilliwaup Causeway Replacement and Estuary Restoration (#1346)
18. Livingston Bay – Diked Farmland & Nearshore Habitat (#1618)
19. McGlinn Island Causeway (#1092)
20. Milltown Island (#1230)
21. Mission Creek Estuary Reconnection (#1237)
22. Nearshore Restoration Strategy for Twin Rivers (#1190)
23. Nooksack River Estuary (#1055)
24. North Fork Levee Setback (#1102)
25. Point Whitney (#1379)
26. Quilceda Estuary Restoration (#1136)
27. Sequalitchew Creek Culvert (#1467)
28. Smith Island Estuary Restoration (#1142)
29. Snohomish Estuary Mainstem Connectivity (#1805)
30. Snow Creek and Salmon Creek Estuary Restoration (#1230)
31. Spencer Island Restoration (#1149)
32. Tahuya Causeway Replacement and Estuary Restoration (#1404)
33. Telegraph Slough - Phase 1 and 2 (#1633, 1635)
34. Twanoh State Park Beach Restoration(#1421)
35. Washington Harbor Tidal Hydrology Restoration Project (#1237)
36. WDNR Marine Lab Bulkhead Softening (#1684)

Appendices

A Action Characterization Report Results
B Quantity Estimate Guidelines
C Applied Geomorphology Guidelines and Benefits of Openings
D Field Maps

Acronyms and Abbreviations

ACR	Action Characterization Report
AASHTO	American Association of State Highway and Transportation Officials
BNSF	Burlington Northern Santa Fe
BPA	Bonneville Power Administration
CCC	Civilian Conservation Corps
CDT	Concept Design Team
cfs	Cubic feet per second
CMP	Corrugated metal pipe
CY	Cubic yards
DEM	Digital Elevation Model
EHW	Extreme high water
ELJ	Engineered log jam
FEMA	Federal Emergency Management Agency
GI	General Investigation
GIS	Geographic information system
GLO	General Land Office
H-Sheet	Hydrographic sheet
HDPE	High-density polyethylene
I-5	Interstate 5
LF	Linear feet
LiDAR	Light Detection and Ranging
LLTK	Long Live the Kings
LOTT	Lacey-Olympia-Tumwater-Thurston
LWD	Large woody debris
MHHW	Mean higher high water
MHW	Mean high water
MLW	Mean low water
MLLW	Mean lower low water
mph	Miles per hour
MSL	Mean sea level
MTL	Mean tide line
NAVD	North American Vertical Datum
NAS	Naval Air Station
NER	National Ecosystem Restoration
NMFS	National Marine Fisheries Service
NOAA	National Oceanic and Atmospheric Administration
NPDES	National Pollutant Discharge Elimination System
ppt	Parts per trillion
PSE	Puget Sound Energy
PSNERP	Puget Sound Nearshore Ecosystem Restoration Project
PUD	Public Utility District
SF	Square feet
T-Sheet	Topographic sheet
U&A	Usual and Accustomed
USACE	U.S. Army Corps of Engineers
USFWS	U.S. Fish and Wildlife Service
USGS	U.S. Geological Survey
UW	University of Washington
WDFW	Washington Department of Fish and Wildlife

WDNR	Washington Department of Natural Resources
WPCF	Water pollution control facility
WRDA	Water Resources Development Act
WRIA	Water Resource Inventory Area
WSDOT	Washington State Department of Transportation
WSEL	Water surface elevation
WWTP	Wastewater treatment plant

INTRODUCTION

Background

The Washington Department of Fish and Wildlife (WDFW) and the U.S. Army Corps of Engineers (USACE) co-lead the Puget Sound Nearshore Ecosystem Restoration Project (PSNERP), a General Investigation (GI) of Puget Sound. PSNERP was initiated to: (1) evaluate significant ecosystem degradation in the Puget Sound Basin; (2) formulate, evaluate, and screen potential strategies to address these problems; and (3) identify actions and projects to restore and preserve critical nearshore habitat. One aim of this multifaceted GI is to secure substantial federal funding (under the Water Resources Development Act or WRDA) for projects that restore the Puget Sound nearshore.

This report presents engineering design concepts for a suite of potential nearshore restoration *actions* that may be eligible for authorization through WRDA[1]. PSNERP will use the conceptual design information to assess the costs and benefits of each restoration action and formulate a comprehensive plan for restoring the Puget Sound nearshore. The plan will analyze future conditions with and without a strategic nearshore restoration project. This will allow the USACE and WDFW to compare the benefits of implementing nearshore restoration with the future conditions if no action is taken. The ecological and socioeconomic effects of restoration will be expressed in terms of change in ecosystem outputs. The USACE will use this information to select a portfolio of restoration actions that meet federal cost-effectiveness criteria. The selected actions will be evaluated further to verify their suitability for the National Ecosystem Restoration (NER) Plan proposed to be authorized for implementation.

All of the restoration actions described in this conceptual engineering design report will have the potential to provide important ecological benefits regardless of whether they are deemed appropriate for federal authorization. Some of the actions may be more suitable for implementation at the local level through non-federal programs or partnerships. Report authors and PSNERP team members anticipate that the design information provided by the report will support not only potential implementation of projects through WRDA, but also implementation through other federal and non-federal programs, authorities, and funding sources.

This report was prepared by a team of engineering firms led by Environmental Science Associates (ESA). WDFW hired this team to provide concept-level (10%) design services for an initial suite of candidate restoration actions. ESA's team (referred to here as the Concept Design Team or CDT) includes ESA PWA (formerly Phillip Williams Associates, now a fully owned subsidiary of ESA); Anchor QEA; Coastal Geologic Services (CGS); KPFF; and Pacific Survey and Engineering (PSE). Completion of conceptual designs and review of the report was supported by PSNERP team members, project proponents who initially identified the potential restoration actions, and USACE technical experts.

[1] This report uses the term *action* instead of *project* to denote individual restoration efforts that occur within a larger site. For some sites, such as the Skagit River delta, several actions may be proposed. The area where an action is proposed is referred to as the *action area.*

Selection and Screening of Candidate Restoration Actions

The candidate restoration actions PSNERP selected for conceptual design were drawn from PSNERP's analysis of process-based nearshore restoration needs, and from a list of existing restoration opportunities identified by restoration proponents from various governmental and non-governmental organizations throughout the Puget Sound Basin (Figure 1 and Table 1). Each action represents a location where one or more restoration measures can be applied to improve the integrity and resilience of the nearshore ecosystem. According to PSNERP analysis of Puget Sound conditions and program guidance documents, implementing these actions will help achieve nearshore conservation strategies upon which the comprehensive restoration plan for Puget Sound is based (Cereghino et al. in review) (Table 2).

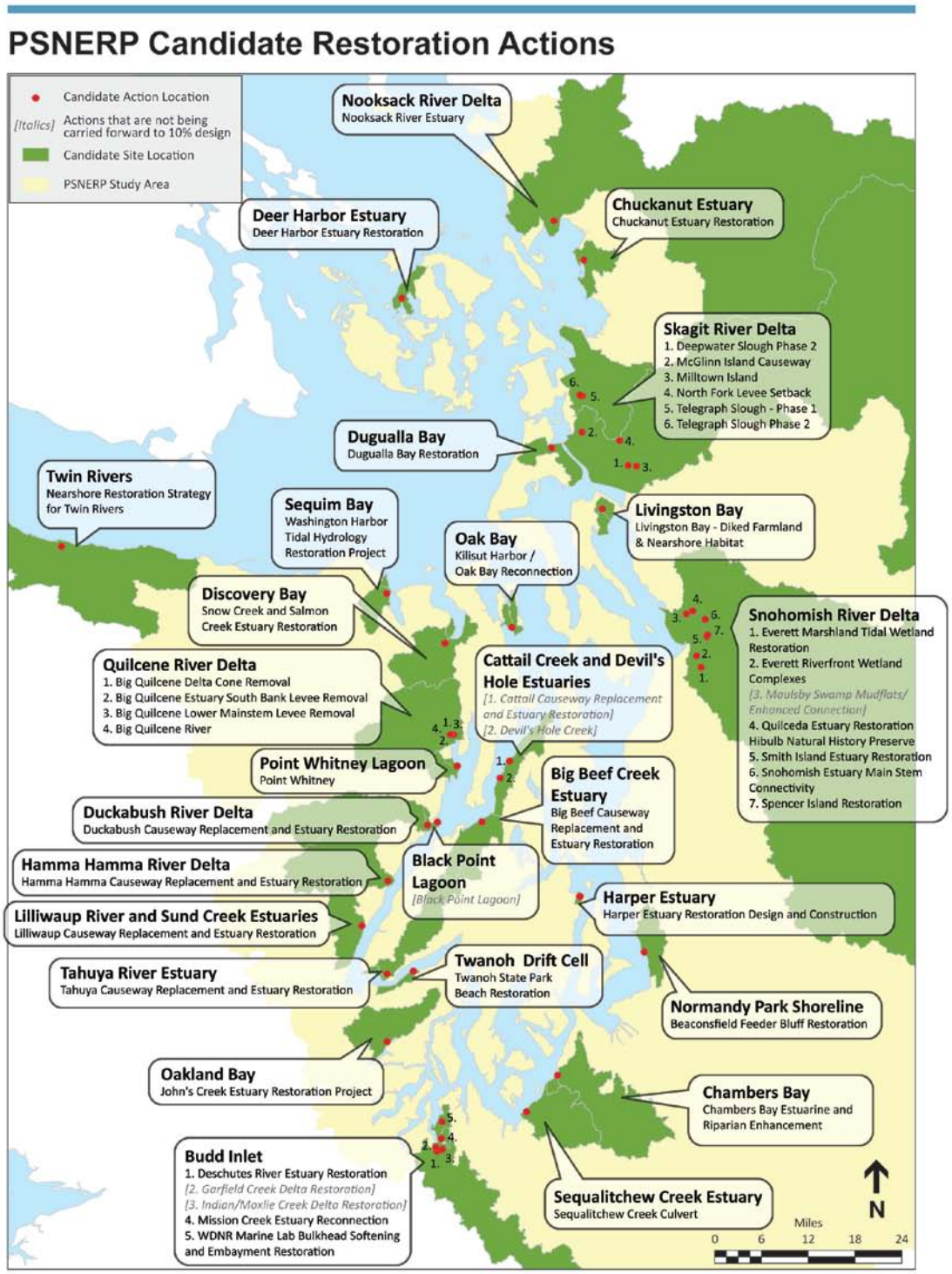

Figure 1. Location of PSNERP Candidate Restoration Actions

Table 1. PSNERP's Candidate Restoration Actions, Local Proponents, and CDT Lead Designer

Action ID	Action Name	Project Proponent	CDT Lead Designer
1499	Beaconsfield Feeder Bluff Restoration	City of Normandy Park	CGS
1256	Big Beef Causeway Replacement and Estuary Restoration	Hood Canal Coordinating Council	CGS with KPFF
1076	Big Quilcene Delta Cone Removal	Hood Canal Coordinating Council	Anchor with KPFF
1074	Big Quilcene Estuary South Bank Levee Removal	Hood Canal Coordinating Council	
1077	Big Quilcene Lower Mainstem Levee Removal	Hood Canal Coordinating Council	
1078	Big Quilcene River	Hood Canal Coordinating Council	
1801	Chambers Bay Estuarine and Riparian Enhancement	South Puget Sound Salmon Enhancement Group	Anchor with KPFF
1642	Chuckanut Estuary Restoration	City of Bellingham	Anchor with KPFF
1101	Deepwater Slough Phase 2	Washington Dept. of Fish & Wildlife	ESA PWA
1648	Deer Harbor Estuary Restoration	People for Puget Sound	CGS
1003	Deschutes River Estuary Restoration	Squaxin Island Tribe	ESA PWA
1012	Duckabush Causeway Replacement and Estuary Restoration	Hood Canal Coordinating Council	ESA PWA with KPFF
1609	Dugualla Bay Restoration	Skagit River Systems Cooperative	Anchor with KPFF
1126	Everett Marshland Tidal Wetland Restoration	City of Everett	Anchor
1127	Everett Riverfront Wetland Complexes	City of Everett	ESA
1047	Hamma Hamma Causeway Replacement and Estuary Restoration	Hood Canal Salmon Enhancement Group	Anchor with KPFF
1505	Harper Estuary Restoration Design and Construction	Kitsap County	KPFF/ESA
1447	John's Creek Estuary Restoration Project	Cascade Land Conservancy	Anchor
1552	Kilisut Harbor / Oak Bay Reconnection	Jamestown S'Klallam Tribe	CGS
1346	Lilliwaup Causeway Replacement and Estuary Restoration	Hood Canal Coordinating Council	PWA with KPFF
1618	Livingston Bay - Diked Farmland & Nearshore Habitat	Whidbey Camano Land Trust	ESA PWA
1092	McGlinn Island Causeway	Skagit River Systems Cooperative	ESA PWA
1091	Milltown Island	Skagit River Systems Cooperative	Anchor with KPFF
1457	Mission Creek Estuary Reconnection	City of Olympia	ESA
1190	Nearshore Restoration Strategy for Twin Rivers	Lower Elwha Tribe	CGS

Action ID	Action Name	Project Proponent	CDT Lead Designer
1055	Nooksack River Estuary	Whatcom Action Area Local Integrating Organization	ESA/PWA
1102	North Fork Levee Setback	Skagit Watershed Council	ESA PWA w KPFF
1379	Point Whitney	Washington Dept. of Fish & Wildlife	ESA PWA
1136	Quilceda Estuary Restoration	Tulalip Tribes	ESA
1467	Sequalitchew Creek Culvert	South Puget Sound Salmon Enhancement Group	Anchor with KPFF
1142	Smith Island Estuary Restoration	Snohomish County	Anchor
1805	Snohomish Estuary Mainstem Connectivity	Tulalip Tribes	ESA
1230	Snow Creek and Salmon Creek Estuary Restoration	North Olympic Salmon Coalition, Hood Canal Coordinating Council, Jefferson County Conservation District	ESA PWA with KPFF
1149	Spencer Island Restoration	Snohomish County, Ducks Unlimited	ESA PWA
1404	Tahuya Causeway Replacement and Estuary Restoration	Mason County	Anchor with KPFF
1633	Telegraph Slough - Phase 1	Skagit River System Cooperative	Anchor with KPFF
1635	Telegraph Slough Phase 2	Skagit Watershed Council, Washington Dept. of Fish and Wildlife	
1421	Twanoh State Park Beach Restoration	Washington State Parks	CGS
1237	Washington Harbor Tidal Hydrology Restoration Project	Jamestown S'Klallam Tribe	Anchor with KPFF
1684	WDNR Marine Lab Bulkhead Softening	Washington Dept. of Natural Resources	CGS
1261	Black Point Lagoon	Hood Canal Coordinating Council	NA
1271	Cattail Causeway Replacement and Estuary Restoration	Naval Base Bangor	NA
1286	Devil's Hole Creek	Naval Base Bangor	NA
1004	Garfield Creek Delta Restoration	City of Olympia	NA
1005	Indian/Moxlie Creek Delta Restoration	City of Olympia	NA
1131	Maulsby Swamp Mudflats/Enhanced Connection	City of Everett	NA
NA indicates action failed screening criteria and was not carried forward to 10% design			

Table 2. Description of PSNERP's Restoration Strategies for Puget Sound

#	Strategy Name	Description
1	River Delta	Protect and restore freshwater input and tidal processes where major river floodplains meet marine waters.
2	Beach	Protect and restore sediment input and transport processes to littoral drift cells where bluff erosion sustains beach structure.
3	Barrier Embayment	Protect and restore sediment input and transport processes to littoral drift cells where bluff erosion sustains barrier beaches that form barrier embayments and restore the tidal flow processes within these partially closed systems.
4	Coastal Inlet	Protect and restore tidal flow processes in coastal inlets, and protect and restore freshwater input and detritus transport processes within these open embayment systems.

The CDT visited each action area and met with the local restoration proponents to review and document restoration goals and opportunities at each locale. Following the field visits, the CDT identified initial restoration alternatives for each potential action and summarized the findings in a series of Action Characterization Reports (ACRs), which were delivered to PSNERP in October 2010 (Appendix A). Each ACR describes the potential restoration opportunities in terms of ecological effectiveness and engineering feasibility. Based on the initial action characterization results, the CDT evaluated each action using primary and secondary screening criteria to determine if the action was appropriate for 10% engineering design (Table 3).

Table 3. Screening Criteria Used to Identify Actions that are Suitable for 10% Design

Fatal Flaws: A *No response* on any question results in a *No Go* determination. Otherwise, the action is recommended for 10% design.			
1	**Criterion**	**Yes**	**No**
1a	The local proponent has not precluded PSNERP's involvement in the concept design.		
1b	The candidate action is sufficiently described and spatially defined to enable us to design restoration alternatives and determine quantity estimates.		
1c	The candidate action is consistent with one or more PSNERP restoration strategies, and an alternative can be described which addresses one or more of the associated restoration objectives.		
Additional Criteria: A *No response* on one or more questions means the action may not be suitable for 10% design. If the action has all *Yes* responses, the action is recommended for 10% design.			
2	**Criterion**	**Yes**	**No**
2a	There is an alternative for this action that could restore ecosystem processes to a substantial portion of their historic (less degraded) state.		
2b	The restored action area will support a broad representation of nearshore ecosystem components appropriate for that geomorphic setting.		
2c	There are no obvious and significant problems external to the action area that would jeopardize the restoration outcome.		
2d	The contributing basin provides for flood discharge, wood recruitment, organism dispersal and sediment supply to support the restored system.		
2e	The restored action area will form a contiguous large patch that is well connected to a surrounding terrestrial and marine landscape.		
2f	The restored ecosystem components within the action area will be internally connected in a way that allows for the unconstrained movement of organisms, water, and sediments.		

Six actions did not meet the screening criteria and were not recommended for further design work (Appendix A). After reviewing the ACRs and preliminary screening results with the local proponents, PSNERP elected to carry 40 of the original 46 candidate actions forward to 10% design. In addition, multiple actions at the Big Quilcene River site were combined into one action, and two phases of the Telegraph Slough action were combined into one; this brought the total number of actions being carried forward to 10% design from 40 to 36. Each of these 36 actions is described in a subsequent chapter of this report.

Restoration Design within PSNERP's Framework

PSNERP's restoration strategies are aimed at restoring damaged or degraded ecosystem processes. Process-based restoration involves making intentional changes to an ecosystem to allow erosion, accretion, tidal exchange, accumulation of wood debris, and other natural process to occur. Process-based restoration is often distinguished from species-based restoration which aims to improve the services an ecosystem provides to a single species or group of species as opposed to improving the entire ecosystem. It is anticipated that process-based restoration will deliver benefits to the diverse array of species that rely upon nearshore ecosystems in a manner that is sustainable and reduces the need for future interventions at the restored site. PSNERP has documented representative relationships between "valued ecosystem components", including juvenile salmonids, forage fish, and shorebirds, as part of a series of technical reports, available on the program website (http://www.pugetsoundnearshore.org/technical_reports.htm).

In PSNERP's framework, each candidate restoration action involves removing one or more ecosystem *stressors* using specific *management measures*. Stressors are physical alterations that interrupt, preclude, or displace nearshore processes. PSNERP documented the presence of the following stressors throughout Puget Sound as part of the Strategic Needs Assessment (Schlenger et al. in review): nearshore fill, tidal barriers, shoreline armoring, railroads, nearshore roads, marinas, breakwaters and jetties, overwater structures, dams, stream crossings, impervious surfaces, and land cover development.

PSNERP used stressor information to calculate a *degradation score* for a series of nearshore analysis units. The CDT supplemented this relatively coarse scale information on stressors with additional site-specific information gathered during the field investigations to create restoration concepts for each action. The design concepts presented here document the amount of each stressor to be removed at each action area. PSNERP will use the information concerning stressor removal to recalculate the degradation scores and quantify the benefits of each restoration alternative.

Management measures are the restoration, rehabilitation, and enhancement activities (as well as protection, management, and regulatory endeavors) that remove stressors to recover or improve nearshore ecosystems. PSNERP defined 21 management measures for protecting and restoring Puget Sound (Clancy et al. 2009; http://www.pugetsoundnearshore.org/technical_papers/management_measures.pdf). Each candidate restoration action involves applying one or more of these management measures to achieve the site-specific restoration objectives. The measures that are the primary focus of this conceptual design report are the ones that have the most direct effect on nearshore processes and require in-depth engineering analysis, including:

- Topography Restoration: dredging, fill removal, or addition of surface material so that the physical structure of beaches, shorelines, and tidal wetlands can be restored.
- Armor Removal or Modification: removal of coastal erosion protection structures, including rock revetments, bulkheads, and retaining walls, to reinitiate sediment delivery and transport within beach systems.
- Hydraulic Modification: modification of culverts, tide gates, or levees to improve tidal or fluvial connectivity and the associated conditions in marsh and lagoon habitats.

- Berm or Dike Removal or Modification: removal of structures to restore tidal inundation and restoration of tidal wetland ecosystems.
- Channel Rehabilitation or Creation: restoration or creation of tidal, alluvial, and distributary channels to restore the natural movement and exchange of water, sediment, and/or detritus.

Other management measures such as Beach Nourishment, Contaminant Removal/ Remediation, Debris Removal, Groin Removal, Invasive Species Control, Large Wood Placement, Physical Exclusion, Overwater Structure Removal or Modification, Species/ Habitat Enhancement, Substrate Modification, Reintroduction of Native Animals, and Revegetation are used for some actions depending on the specific restoration opportunities available. Management measures such as Public Outreach/ Education, Habitat Protection Policies and Regulations, and Property Acquisition and Conservation are common to all actions.

Definition of Conceptual (10%) Design

Conceptual (10%) design is the first step in the restoration design sequence. Typically projects move from the concept stage (10%) to preliminary design (35%) to final design (which often involves 60, 90, and 100% design plans). While there are no precise definitions for 10% design, conceptual design generally involves identifying site-scale restoration alternatives and comparing them in terms of their relative costs, benefits, and feasibility. For purposes of this contract, 10% design involves the following:

- Describing site conditions and restoration opportunities;
- Describing how specific management measures will be applied to remove stressors and restore processes;
- Identifying the potential need for land acquisition;
- Describing the primary design considerations that might affect feasibility, cost and/or success of the project;
- Describing the ecological evolution of the restored site;
- Quantifying the type and amount of stressor removal at each action area;
- Describing uncertainties and/or risks associated with property acquisition, flooding, weak soils, contamination, etc.;
- Assessing risks caused by projected sea level change;
- Describing additional information needs; and
- Estimating quantities for all the major design elements.

A major goal of the 10% design process is defining data gaps and uncertainties that will need to be addressed in subsequent design phases, since detailed site investigations are typically not performed at the conceptual design stage. Subsequent design studies could include, for example, topographic surveys, geotechnical analyses, contaminant tests, cultural resources assessments, and hydrodynamic models. Ideally, the conceptual design process enables a project proponent to select a preferred alternative that can be developed in more detail during the later design stages.

To ensure that a feasible and effective restoration alternative can be found for each of PSNERP's candidate actions, the CDT attempted to identify a broad spectrum of what

might be possible within each action area. Thus, each action is represented in terms of a *full restoration* alternative and a *partial restoration* alternative. Bracketing a wide range of restoration possibilities for each action in this way bolsters PSNERP's ability to:

- Identify the combination of restoration measures that maximizes ecosystem benefits compared to costs, consistent with federal ecosystem restoration objectives;
- Select a subset of actions to move forward to preliminary design (35%); and
- Secure authorization for federal funding sufficient to implement a comprehensive restoration plan for Puget Sound (even though the plan may be scaled back as the design progresses).

Definition of Full Restoration

For each candidate action, the full restoration alternative is designed to maximize restoration benefits by fully removing stressors. For planning purposes, the full restoration alternative assumes that private properties can be acquired and that most infrastructure such as secondary roads and local utilities can be modified, relocated, or removed to fully restore processes. Major infrastructure such as regional transmission lines, state highways, and railroads are treated as constraints to full restoration and addressed accordingly. Although these assumptions are important for fully delineating the scope of federal authority that would be needed to implement these actions using WRDA appropriations, PSNERP recognizes that the full restoration alternative may not be appropriate for some actions. In particular, PSNERP recognizes that acquisition of private lands and infrastructure relocation hinge on landowner willingness, stakeholder support, and myriad other factors that have not been fully investigated at the concept design stage.

Full restoration as presented here involves applying specific process-based management measures to remove the causes of process degradation, which vary depending on the strategy/shoreform (Table 4). The description of a full restoration alternative is intended to assist the planning process by describing a site's near-maximum potential. In most cases, PSNERP recognizes that site-specific feasible, cost-effective, and socially acceptable alternatives may be scaled back through subsequent steps in the design process.

Table 4. Full Restoration Objectives, Target Processes, and Associated Management Measures

Full Restoration Objective	Target Processes (primary in bold)	Management Measures
River Deltas - Ecosystem processes can be fully restored by removing the dominant stressors to a degree that allows undegraded tidal flows and freshwater inputs necessary to support a full range of delta ecosystem processes, focusing on the reestablishment of complex wetlands that include oligohaline transition and tidal freshwater components	**Tidal flow** **Freshwater input** (including alluvial sediment delivery) Erosion and accretion of sediments Distributary channel migration Tidal channel formation and maintenance Detritus recruitment and retention Exchange of aquatic organisms	Berm or dike removal, frequently complemented by channel rehabilitation, and topographic restoration
Beaches - Ecosystem processes can be fully restored by removing or modifying barriers to the movement of sediment from source (bluffs) to sinks (beaches) to a degree that allows the full range of beach processes	**Sediment supply** Sediment transport Erosion and accretion of sediments Detritus recruitment and retention	Armor removal Groin removal (where cross-shore structures impound sediment, and starve down-drift beaches)
Embayments - Ecosystem processes can be fully restored by removing the dominant stressors to a degree that allows undegraded tidal flows necessary to support a full range of embayment ecosystem processes	**Sediment supply** **Sediment transport** **Tidal flow** Erosion and accretion of sediments Detritus recruitment and retention Tidal channel formation and maintenance	Armor removal Groin removal Berm or dike removal (in some settings) Topographic restoration (where embayments have been filled) Channel rehabilitation Hydraulic modification (where restoration of natural tidal channel formation and maintenance processes is constrained)
Coastal Inlets - Ecosystem processes can be fully restored by removing the dominant stressors to a degree that allows undegraded tidal flows and freshwater inputs necessary to support a full range of coastal inlet ecosystem processes	**Tidal flow** **Freshwater input** (including alluvial sediment delivery) Tidal channel formation and maintenance Detritus recruitment and retention	Berm or dike removal Topographic restoration (where inlets have been filled) Hydraulic modification (for restoring tidal flow in some settings but may not provide a full range of ecosystem processes)

Definition of Partial Restoration

Each candidate action is also represented by a partial restoration alternative. The partial restoration alternative differs from full restoration in that it: (1) generally does not fully remove stressors, and (2) is typically more constrained in terms of the scope, scale, and/or complexity of restoration features involved. Partial restoration alternatives typically involve fewer management measures, have smaller or more constrained tidal openings, have a smaller footprint, and require less property acquisition than full restoration. In some cases, the partial restoration alternative is configured to take advantage of properties that are believed to have willing owners (which needs to be confirmed). Partial restoration generally reflects the local proponent's needs and desires and may include public access features such as trails, boat launches, and other amenities that are necessary to satisfy local interests.

As an example, the full restoration alternative for the Chuckanut Estuary Restoration action (Chapter 5, #1642) involves removing the existing railroad berm crossing the estuary and replacing it with a bridge. The partial restoration alternative, by comparison, removes only 290 feet of the berm. The smaller opening in the partial restoration alternative was sized to provide the desired tidal velocities and complexity of tidal circulation and wave action within the estuary, while minimizing the engineering complexities associated with replacing over 2,000 linear feet of an active railroad line. Despite not achieving full removal of stressors, the CDT attempted to define partial restoration alternatives for this and other actions which would:

- Support a wide range of ecosystem processes;
- Provide wide representation of ecosystem components appropriate for the shoreform;
- Include contiguous large patches that are well connected to each other and to a surrounding alluvial, terrestrial, and marine landscape;
- Be internally connected to allow for the unconstrained movement of organisms, water, and sediments; and
- Ensure adequate flood discharge, wood recruitment, organism dispersal, and sediment supply to support functions.

Report Organization and Design Assumptions

Each of the following 36 chapters of this report describes the 10% design concept for a candidate restoration action. Each chapter includes background information on the action area, historical maps, an overview of the design concept, and details for the major restoration features. The text is organized to emphasize issues that are important to PSNERP's restoration framework: stressors and management measures. Plan view and cross section drawings depicting the key design elements are provided for the full and partial restoration alternatives for each action. An engineer's estimate of quantities is also provided for each action and each alternative. Additional maps depicting current and historic shoreform type for each action area are included in Appendix D.

This report presents design concepts to support development of a comprehensive restoration plan for Puget Sound; these designs are not ready for construction. The designs are intended to help PSNERP determine the least-costly way of attaining its Sound-wide restoration objectives.

This report does not identify or address all of the social, political, or economic implications of the proposed restoration actions. That work will occur as part of subsequent design and analysis.

Design Elements Common to All Actions

The restoration actions described in this report share a number of common elements and have some similar underlying design assumptions. This section describes those commonalities to minimize repetition of information in each of the design chapters that follow.

Rail, Roadway, and Bridge Standards

Many of the actions involve replacement or modifications of transportation facilities such as railroads, roadways, and bridges. For the 10% design, the CDT assumes that all road and bridge work will conform to Washington State Department of Transportation (WSDOT) standards and comply with local agency requirements. Rail modifications would need to be coordinated with rail operators including Burlington Northern Santa Fe (BNSF) and will conform to their standards. Deviations, if needed, would be identified in subsequent stages of design.

The 10% design work focused primarily on identifying feasible horizontal alignments for proposed rail, road, and bridge improvements. The CDT developed general standards for establishing bridge elevations based on available topographic data (mainly LiDAR) and assumptions about clearance needs. In most cases the lead designer assumed a bridge height of extreme high water (EHW) +3 feet, or mean higher high water (MHHW) +3 feet (Table 5). Bridge elevations may need to be adjusted during subsequent design stages to account for sea level change and other factors.

Table 5. Methods for Establishing Bridge Elevations for 10% Design

Action	MHHW	EHW	STRUCTURE DEPTH	DECK ELEV. (ft)	METHOD FOR ESTABLISHING BRIDGE ELEV.
Big Quilcene					
Full		29.8	5'-2"	38.0	EHW + 3 FT
Partial		22.7	5'-2"	39.0	EHW + 3 FT
Big Beef Causeway Replacement and Estuary Restoration					
	13.47		5'-2"	23.0	MHHW + 3 FT
Chambers Bay Estuarine and Riparian Enhancement					
Road		15		25.9	EHW + 3 FT
Rail		16.5	8'-7"	28.1	
Chuckanut Estuary Restoration					
West End		12.7	4'-2"	16.6	0' clear (bottom of girder at EHW)
East End		12.7	4'-2"	18.0	EHW +1.1 clear
Deer Harbor					
	7.38		5'-2"	15.55	MHHW + 3 FT
Deschutes River Estuary Restoration					

Action	MHHW	EHW	STRUCTURE DEPTH	DECK ELEV. (ft)	METHOD FOR ESTABLISHING BRIDGE ELEV.
	10.43		5'-2"	18.6	MHHW + 3 FT
Duckabush Causeway Replacement and Estuary Restoration					
Full	8.87		5'-2"	18.5 (min.)	MHHW + 3 FT
Partial	8.87		6'-6"	18.5 (min.)	MHHW + 3 FT
Dugualla Bay Restoration					
Full		12.8	6'-6"	22.3	EHW + 3 FT
Partial		12.8	5'-2"	21.0	EHW + 3 FT
Everett Marshland Tidal Wetland Restoration					
Full - Road 1		24.0	5'-2"	23.0	These bridges will be inundated at the 5-yr event of the Snohomish River
Full - Road 2		23.0	5'-2"	23.0	
Full - Rail		23.0	4'-2"	23.0	
Partial - Road 1		25.0	5'-2"	21.0	
Partial - Road 2		23.0	5'-2"	18.0	
Partial - Rail 1		24.5	4'-2"	24.0	
Partial - Rail 2		23.0	4'-2"	23.0	
Hamma Hamma Causeway Replacement and Estuary Restoration					
Full		12.0	3'-6"	21	Exceeds EHW + 3 FT
Partial		12.0	3'-6"	20	Exceeds EHW + 3 FT
Kilisut Harbor / Oak Bay Reconnection					
	7.40		5'-2"	15.57	MHHW + 3 FT
Lilliwaup Causeway Replacement and Estuary Restoration					
	8.87		5'-2"	17.04	MHHW + 3 FT
McGlinn Island Causeway					
Full	8.84		6'-6"	18.34	MHHW + 3 FT
Nooksack River Estuary					*County Standard for River System is 10-yr flood +2' clear*
Several Structures - Shallow Girder Section	8.2		6'-6"	17.7	MHHW + 3 FT
Several Structures - Thick Girder Section	8.2		5'-2"	16.4	MHHW + 3 FT
Sequalitchew Creek					
Full		unknown	8'-7"	match existing	Exceeds EHW + 3 FT
Snohomish Estuary Mainstem Connectivity					*County Standard for River System is 10-yr flood +2' clear*
Full (three bridges)	9.2		5'-2"	22.2	Exceeds MHHW + 3 FT
Partial (three bridges)	9.2		6'-6"	25	Exceeds MHHW + 3 FT

Action	MHHW	EHW	STRUCTURE DEPTH	DECK ELEV. (ft)	METHOD FOR ESTABLISHING BRIDGE ELEV.
Snow and Salmon Creek					*Unknown if EHW includes SLR*
Full	7.41	10.8	5'-2"	19.0	EHW + 3 FT
Partial	7.41	10.8	6'-6"	20.3	EHW + 3 FT
Tahuya Causeway Replacement and Estuary Restoration					
		14.1	3'-6"	20.6	EHW + 3 FT
Telegraph Slough - Phase 1 & 2					
Road		14.0	6'-6"	23.5	EHW + 3 FT
Rail		14.0	4'-2"	21.2	EHW + 3 FT
Washington Harbor					
		11.5	5'-2"	19.7	EHW + 3 FT

Public Outreach and Property Acquisition

None of the actions could be successfully implemented without extensive coordination with the local proponents, affected property owners, and other stakeholders. As a result, public education/outreach is a common component of all the restoration actions described here. Federal ecosystem restoration principles (USACE ER 1105-2-100) require collaboration and coordination with federal and non-federal partners, with those who have an interest in the restoration, and with the public. Public engagement must include disseminating information about proposed activities, understanding the public's needs and concerns, and consulting members of the public before decisions are reached. PSNERP is committed to ongoing coordination with affected stakeholders throughout the subsequent stages of the design process.

Public outreach and stakeholder engagement are especially critical for those actions that could adversely affect established recreational and/or commercial uses. Some of the actions (e.g., Deepwater Slough, #1101) occur on public lands that are popular recreational waterfowl hunting areas. Other actions (e.g., Hamma Hamma Causeway, #1047; Point Whitney Lagoon, #1379) could jeopardize commercial or recreational shellfish production and harvest. Dam removals at Chambers Bay (#1801) and Deschutes Estuary (#1003) would affect public resources, water rights, and other amenities that have large constituencies. If these or other actions with significant social, political, or economic implications move forward, PSNERP will need to work closely with affected stakeholders to evaluate potential tradeoffs, mitigate adverse impacts, and secure support for implementation.

All but a few of the actions would require acquisition or conservation of private property through purchase, easement, or other means (some of the actions are located wholly on state or publicly owned land). In the case of several actions, the potential property acquisition/conservation needs could be substantial if the full restoration alternative or some version of it were carried forward. The CDT attempted to identify the total project lands and lands to be acquired for each action based on readily available parcel data so that property needs could be considered when selecting a preferred alternative and weighing overall costs and benefits. The willingness of property owners to make their lands available for restoration is often unknown at this point, and will need to be assessed during subsequent design stages. Federal ecosystem restoration principles

specify that land acquisition should be minimized (generally not more than 25% of total project costs).

Regulatory Compliance and Permitting

All of the actions involve work in wetlands, waters of the state/waters of the U.S., and other sensitive or protected habitats. The actions will therefore need to comply with multiple and sometimes overlapping local, state, and federal laws, including but not limited to:

- National Environmental Policy Act
- State Environmental Policy Act
- Clean Water Act Sections 404 and 401
- National Pollutant Discharge Elimination System
- Endangered Species Act
- National Historic Preservation Act
- State Hydraulic Code
- State Shoreline Management Act
- Local Development Codes and Critical Areas Ordinances

The specific permits required and agencies involved will vary depending on the location and nature of the work associated with each action. A complete description of the permit/regulatory needs will be determined during subsequent design stages. Even though the proposed restoration actions will have beneficial effects on nearshore resources, impacts of construction (e.g., pile driving, excavation, dewatering, etc.) will need to be fully evaluated pursuant to applicable statutes and policies.

All of the actions that involve work below the ordinary high water mark of any waterbody will need to adhere to timing restrictions mandated by state and federal agencies. The restrictions are designed to prevent in-water construction activity during periods of salmonid migration and/or forage fish spawning. Regulatory agencies determine specific "windows" when in-water work is allowed on a case-by-case basis depending on the location of the work and the species present. Table 6 provides the approximate work "windows" for estuarine/saltwater habitats in Puget Sound.

Table 6. In-Water Work Windows for Estuarine/ Saltwater Habitats in Puget Sound

Species	Allowed in-water work window (approximate)
Salmon and bull trout	July to March
Herring	April to January
Sand lance	March to October
Surf smelt	April to September

Sea Level Change Risk Analysis

PSNERP is required to consider the effects of projected changes in sea level on proposed restoration actions[2]. To fulfill this requirement, the CDT qualitatively evaluated each action and each restoration alternative in terms of three scenarios that USACE uses for coastal investigations: "low," "intermediate," and "high" (Table 7). The data represented in these scenarios are coarse approximations of sea level trends for a period of 50 years into the future with changes that may be nearly imperceptible from year to year. For these and other reasons, readers are advised not to place too much significance on absolute numbers, or significant digits, in this rapidly evolving area of scientific study.

Table 7. Puget Sound Nearshore Sea Level Change Analysis (centimeters increase (+) during the period of analysis, 2015 – 2065)

	Low Scenario (Extrapolate Historical)	Intermediate Scenario (Global SLR – VLM= Net SLR)			High Scenario (Global SLR – VLM= Net SLR))		
Puget Sound Sub-basin	Net SLR	Global SLR	VLM	Net SLR	Global SLR	VLM	Net SLR
Strait of Juan de Fuca	-8	21	17	4	63	17	46
San Juan Islands and Strait of Georgia	-8	21	17	4	63	17	46
Hood Canal	-8	21	17	4	63	17	46
Whidbey	-8	21	17	4	63	17	46
North Central Puget Sound	-8	21	17	4	63	17	46
South Central Puget Sound	13	21	-2	23	63	-2	65
South Puget Sound	13	21	-2	23	63	-2	65

Cultural/Historical Resources, Contaminant Surveys, and Endangered Species Act Consultation

The U.S. Fish and Wildlife Service (USFWS) is supporting the conceptual design process by performing the following services for each candidate action:

- Conducting Level I Environmental Contaminant Surveys, including record searches, onsite interviews, and assessments for each action area;
- Researching, identifying, and documenting cultural and historic resources to provide baseline information to expedite future compliance with Section 106 of the National Historic Preservation Act; and
- Developing information about the presence of Endangered Species Act-listed species and species of concern in each action area and providing guidelines for future project implementation.

The results of this work will be reported in a separate document to be completed in 2011. As a result, this design report contains minimal information about these specific topics

[2] See Corps of Engineers Circular EC 1165-2-211 regarding "Incorporating Sea-Level Change Considerations in Civil Works Programs"(140.194.76.129/publications/eng-circulars/ec1165-2-211/entire.pdf).

pending completion of the USFWS study. The presence of Endangered Species Act-listed species and species of concern, contaminated soils, and cultural resources is reported for each action area where known, but this information should be considered preliminary and subject to future investigation and verification.

Monitoring

Each restoration action has associated monitoring needs and opportunities that are necessary for achieving success. Monitoring is essential for informing our understanding of restoration as a science, and for providing accountability to project proponents and stakeholders.

Although it is difficult at the conceptual design stage to identify all of the monitoring opportunities and needs that a given action presents, the CDT attempted to identify preliminary performance indicators for each candidate action that could provide valuable information for assessing and documenting restoration outcomes.

The CDT developed a standard list of monitoring parameters based on information in PSNERP's management measures technical report concerning restoration evaluation (Table 8). Using professional judgment, the CDT noted which of these parameters might constitute a key performance metric based on the nature of the restoration being proposed, the action area conditions, and other specific factors. This information should be considered preliminary, pending development of a more comprehensive and programmatic nearshore restoration monitoring program for Puget Sound as well as a more detailed understanding of the needs and opportunities at each action area.

Table 8. Standard Monitoring Parameters Used to Denote Key Performance Indicators

Monitoring Parameter	Description
Topographic stability	Important for actions involving removal of armoring, often useful in conjunction with sediment accretion and erosion monitoring; helps assess effects of restoration on sediment processes.
Sediment accretion / erosion	Important for assessing sediment accumulation and effects on estuary morphology and habitat.
Wood accumulation	Important for documenting distribution of woody debris in restored channels and elsewhere.
Soil / substrate conditions	Important for projects involving beach or bluff restoration.
Vegetation establishment	Important for actions where revegetation is planned or where habitats are intended to transition (e.g., mudflat to marsh); also important in areas that are graded to marsh plain elevations to encourage recolonization.
Marsh surface evolution / accretion	Important for berm and levee removal actions or other restoration involving reintroduction of tidal action to blocked coastal inlets.
Tidal channel cross-section / density	Important for actions involving channel excavation or rehabilitation; also important for actions targeting increase in tidal channel density; can help to verify stability of tidal channel modifications.

Monitoring Parameter	Description
Water quality (contaminants)	Important for actions that may change drainage patterns or have sensitive receptor sites; important where water quality issues have been documented.
Salinity	Important where restoration alters freshwater flow; also helpful for actions where existing shellfish operations may be at risk.
Shellfish production	Important for actions where existing shellfish operations may be at risk.
Extent of invasive species	Important for action areas with existing infestations of invasive species.
Animal species richness	General parameter that provides an indication of overall ecological benefits.
Fish (salmonid) access/use	Important for many berm and levee removal actions and hydraulic modification actions where fish passage barriers are removed.
Forage fish production	Important for beach restoration projects or for action areas where restoration may alter beach characteristics.
Wildlife species use	General parameter that provides an indication of overall ecological benefits.

For estimating monitoring quantities, the CDT somewhat arbitrarily assumed that monitoring for a key performance parameter (e.g., erosion/ sedimentation, vegetation establishment, etc.) would require 5 crew-days (a crew-day is two people working 8 hours each) per year for a 5-year monitoring period. Some actions may require more or less monitoring, so this estimate should be considered preliminary (see *Approach to Quantity Estimation* below for more information).

Adaptive Management

Adaptive management is the suite of activities that must occur following a restoration action to ensure the benefits are achieved over time. Adaptive management incorporates long-term monitoring to improve scientific understanding of the effects of various restoration actions on the nearshore ecosystem.

It is challenging at the concept design stage to know what types of adaptive management these restoration actions will require, but the following general needs seem likely given the suite of actions and management measures in PSNERP's portfolio:

- Topography modifications to adjust site elevations to achieve target habitat, "jump-start" channel development, or make up for slower-than-expected erosion;
- Adjustments to channel openings to achieve target tidal prism;
- Installation of woody debris or other features to create desired structural attributes;
- Plant installation to replace dead/dying material, stabilize eroding slopes, or create habitats as topography evolves; and
- Nourishment of substrates due to erosion.

PSNERP will prepare a comprehensive adaptive management program for the suite of actions it brings forward to implementation. Additional information concerning the adaptive management needs at each action area will be prepared during the subsequent design stages.

Operations and Maintenance

Many of the restoration actions involve modifying infrastructure such as bridges, culverts, and levees. These structures will require ongoing operations and maintenance in order to maintain the benefits of the restoration action over time. The types of ongoing operations and maintenance that will be required to maintain benefits associated with the proposed restoration actions include, but are not limited to:

- Routine inspections;
- Levee repair to correct for settlement, erosion, or other signs of compromised integrity;
- Removal of debris/wrack blocking bridge and/or culvert openings;
- Scour protection around bridge pilings; and
- Mechanical adjustments to ensure properly functioning tide gates.

Restoration areas that are accessible to the public may have specific management or operational needs such as maintenance of trails, signage, docks/boat launches, or exclusionary devices (fences). A more complete understanding of the specific operations and maintenance needs associated with each action will be compiled during the subsequent design stages.

Approach to Quantity Estimation

A key component of the 10% design phase is the estimate of construction quantities. PSNERP will rely on the quantity estimates as a basis for determining likely construction costs. Because it is difficult to develop precise estimates for some quantities without the type of detailed information that typically comes later in the design process, estimates reported here assume a contingency of about +50% (30% design contingency and 20% construction contingency).

Precision is achieved by standardization of the quantity estimate format. The CDT developed a standard template for estimating quantities associated with each action. Quantities are listed separately for both the full and partial restoration alternatives. Each line item has a description that provides additional information to the audience, which is assumed to be either the cost estimator or a technical reviewer. Lump sums or units of “each” are also used with detailed descriptions.

The quantity estimates can be derived from the plan and section drawings included with each action. Backup is provided via digital files used to create the plan and cross section drawings. (Digital files are available from PSNERP.)

Ideally, the quantity estimate will be in units that are compliant with cost-benefit analysis. For example, linear feet (LF) of bulkhead removal with a description of bulkhead height and material allows for more direct adjustment, if needed, to change the

cost-benefit (e.g., adjust to 500 LF of bulkhead removal instead of 800 LF). More detail on the quantity estimates is provided in Appendix B.

Applied Geomorphology Guidelines and Hierarchy of Openings

The CDT developed project-specific guidelines to help standardize the design approach and aid in quality control (Appendix C). The geomorphology guidelines use empirical models calibrated with data collected from field sites and are most useful when the site parameters lie within the range of the calibration data. Parameters include tide range, sediment and vegetation, fluvial effects, salinity (which affects plant types and geomorphology), and in some cases wave and littoral climate. The guidelines are organized as follows:

1. Tides: Tide design parameters are identified for National Ocean Service tide stations selected to represent the varying tides in Puget Sound. Tide ranges are tabulated. Tidal datum conversions from Mean Lower Low Water (MLLW) to North American Vertical Datum (NAVD88) are provided at each tide station.

2. Tidal Marsh Channels: Regression lines and graphs are provided to relate channel geometry (channel cross sectional area, width and depth) to marsh area and tidal prism. A set of regressions and graphs are provided for each tide station identified in (1), based on the tide range. A procedure is provided to estimate channel geometry with combined tidal and stream discharge.

3. Tidally Influenced Fluvial Channels: Guidance for tidally influenced fluvial channels is to use historic data, remnant channel geometry, and available published data on a site-specific basis.

4. Tidal Inlets: A set of graphs are provided for tidal inlets where wave action and littoral drift affect the channel geometry and, in particular, limit the tide range. The graphs allow prediction of the tidal prism necessary for an open inlet and the size of the inlet cross section for a given tidal prism.

5. Beach Geometry: Guidance is provided to estimate the berm elevation of coarse sediment beaches.

Because so many of the restoration actions included in this report involve removing or reducing tidal barriers, the CDT also attempted to define the relative degree of benefit provided by tidal openings of different sizes and locations in terms of a benefit hierarchy (Appendix C). The benefits are described in terms of improvements in natural processes, structure, and function. By understanding how various openings impact the nearshore ecosystems, crossings of tidal and tidally influenced fluvial channels can be designed to provide maximum benefits.

References

Cereghino, P., J. Toft., S. Simenstad, E. Iverson, S. Campbell, C. Behrens, J. Burke, B. Craig. In process. *Puget Sound Nearshore Conservation Strategies.*

Clancy, M., I. Logan, J. Lowe, J. Johannessen, A. Maclennan, F.B. Van Cleve, J. Dillon, B. Lyons, R. Carman, P. Cereghino, B. Barnard, C. Tanner, D. Myers, R. Clark, J.

White, C.A. Simenstad. M. Gilmer, and N. Chin. 2009. *Management measures for protecting and restoring the Puget Sound nearshore.* Puget Sound Nearshore Partnership Report No. 2009-01. Published by Seattle District, Washington Department of Fish and Wildlife, Olympia, Washington.

Schlenger, P., A. MacLennan, E. Iverson, K. Fresh, C. Tanner, B. Lyons, S. Todd, R. Carman, D. Myers, S. Campbell, and A. Wick. In Review. *Strategic Needs Assessment For Protecting and Restoring the Puget Sound Nearshore*. Prepared for the Puget Sound Nearshore Ecosystem Restoration Project. Technical Report 2010-XX.

4. CHAMBERS BAY ESTUARINE AND RIPARIAN ENHANCEMENT (#1801)

Local Proponent	South Puget Sound Salmon Enhancement Group (SPSSEG)
Delta Process Unit	NA
Shoreline Process Unit(s)	3004, 3003
Strategy(ies)	4 - Coastal Inlet
Restoration Objectives	Restore historic coastal inlet and back barrier landforms by removing barriers to tidal flow, freshwater inflow, sediment erosion/accretion, channel formation and maintenance, and detritus input

4.1 Description of the Action

Alterations to the size, shape, and shoreline of the Chambers Bay Estuary have significantly limited the nearshore processes of the estuary, including tidal hydrology and sediment erosion and accretion. Restoration of the estuary could include the removal of a small dam near the middle to upper portion of the historic estuary, daylighting some or all of the currently culverted spring-fed creek (Garrison Springs), expanding the connection of the estuary to Puget Sound by widening a relatively short railroad trestle, and restoring tidal marsh and riparian vegetation communities. These actions are consistent with the local proponent's description of potential restoration activities that could be conducted at the site. Please see the Introduction chapter for important information regarding PSNERP and for context related to this restoration project.

4.2 Action Area Description and Context

Chambers Bay is located at the confluence of Chambers Creek and Puget Sound, in the South Puget Sound Subbasin. The area is bordered by the towns of University Place, Lakewood, and Steilacoom. The Chambers Bay action area is bounded on the west side by the BNSF railroad causeway and trestle and the mouth of Chambers Bay. On the south and east sides, the action area is bounded by the Chambers Creek Road right-of-way, which includes a BNSF rail spur in the southern portion of the right-of-way, a former mill site, and the banks of the waters impounded behind the Chambers Creek dam. The north side of the action area is bounded by the steep banks of the Chambers Creek ravine, and at the north end of the site, the Chambers Creek Road right-of-way. Land ownership includes both public and private properties. The action area is shown in Figure 4-1.

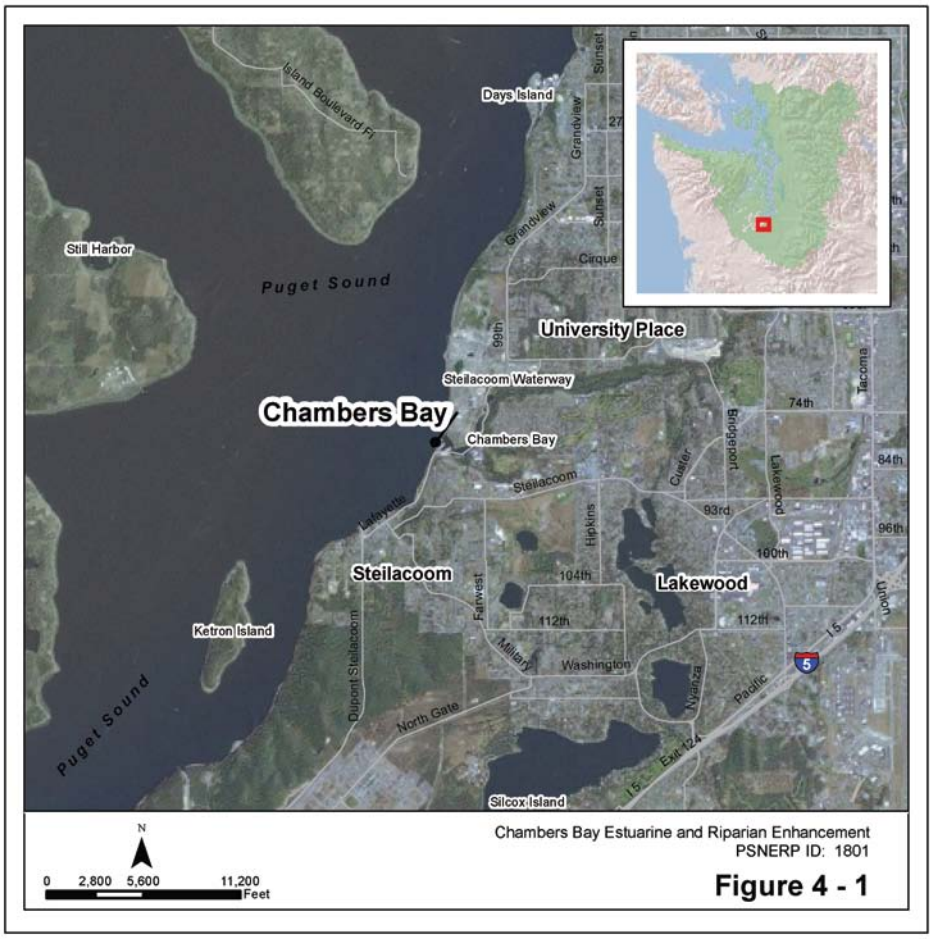

Figure 4-1. Action Area and Vicinity

4.2.1 Historic Condition

Based on the historic topographic sheet (T-sheet) mapping from the late 1800s, the Chambers Bay mouth was historically defined by a barrier beach extending from the south (Figures 4-2A and 4-2B). The embayment extended approximately 7,500 feet upstream from the barrier beach. T-sheet mapping delineated the steeply sloping areas above the shoreline as mixed forest with kelp (likely eelgrass) mapped off the mouth of the bay. It appears that an intertidal area, assumed to be tidal mudflats, marsh, or some combination of the two, existed throughout the entire extent of the embayment based on mapping. Nearly 61 acres of estuarine mixing intertidal area were mapped; however, the mapping and interpretation of the mapping do not indicate clearly the historical extent of specific marsh, mudflat, and tidal channels.

The site has changed due to the dam in the upper estuary, the railroad line and trestle seaward of the historic mouth of the bay, conversion of the historic barrier beach spit into upland area, and nearshore fill and armoring along the shoreline (installed to stabilize lower Chambers Creek Road, the marina [former lumber mill], a bridge, the BNSF rail line, and two mills). The paper mill is no longer active and is currently being demolished.

The north side of the bay was the site of the Steilacoom gravel pit, one of the largest producing gravel mines on the Puget Sound shoreline. Chambers Bay has been

repeatedly dredged as a navigable waterway. The bay previously served as a log storage facility for the mills, and as receiving waters for industrial discharges from the paper mill. The mill outfall was relocated to just outside the bay entrance in the 1970s (Pierce County 2010).

4.2.2 Natural Environment

Chambers Bay is the lower end of an extensive steep-angled ravine, with steep forested slopes incised between two plateaus. The lower portion of Chambers Creek within the ravine is formed by three tributaries: Leach and Flett Creeks, and the outlet of Steilacoom Lake. These three tributaries drain the primarily residential areas of University Place, South Tacoma, Lakewood, and Fircrest.

To the north and south of the mouth of Chambers Bay, bluff-backed beaches were historically present. Currently, these areas are heavily modified. The bluff north of the mouth of Chambers Bay was removed during sand and gravel mining operations, and this area currently accommodates the BNSF railroad corridor that runs north/south along Puget Sound in this area. In the area south of the mouth of Chambers Bay, the historic bluff-backed beach has been replaced by both the BNSF railroad corridor and Chambers Creek Road, disconnecting the bluff from the beach as a sediment source.

Three smaller ravines drain to Chambers Bay on the southeast side. The southernmost drainage (south of the marina) is approximately 0.5 mile long. The center drainage, known as Garrison Springs, is approximately 0.5 mile long; its lower half is within a culvert under the abandoned paper mill. The northern drainage is near the paper mill/sewer utility property line and is approximately 0.25 mile long. The northern drainage is mapped as No Name Creek and drains into the bay via a culvert.

The Fort Steilacoom Golf Course is located between the two northern ravines on the plateau southeast of the bay. Along the entire length of the bay's south shoreline, riparian forest vegetation covers the hillside. The riparian forest is fairly continuous, but it is separated from aquatic areas by the presence of Chambers Creek Road, the closed paper mill, and an inactive railroad track. Along the north shoreline, there is a riparian corridor consisting of a steeply sloping narrow band of scrub vegetation mixed with patches of forest. The scrub vegetation is dominated by invasive species (including Himalayan blackberry and Scot's broom).

The intertidal areas of Chambers Bay consist of mudflats and tidal channels. Little to no salt marsh or brackish marsh vegetation exists below the dam, except for small pockets of marsh grasses protected by the small historic spit of land (which is known to include cultural resources) on the north side of the bay and on the east side of the marina. Upstream of the dam, freshwater emergent wetland vegetation is abundant, a sign of succession associated with basin sedimentation.

As stated previously, it is unclear to what extent salt marsh and brackish marsh existed in the bay historically. Historic photographs of the bay indicate steeply sloped adjacent shorelines. Recent bathymetric studies by Pierce County confirm that eelgrass beds occur off the mouth of Chambers Bay, but not within the bay (Pierce County 2010).

4.2.3 Human Environment

The Chambers Bay Estuary shoreline is extensively modified. On the north side of the bay, past gravel mining stopped within 50 feet of the natural shoreline where the original hillside remains. Above this remaining steep sloping area is the primary development area of Pierce County's 930-acre Chambers Creek Properties, including the County's

Chambers Creek Regional Wastewater Treatment Plant. The area south of the treatment plant and including most of the Chambers Bay Estuary is primarily designated for public access facilities (e.g., meadows, boat launch, parking, trails) in the approved Chambers Creek Properties Master Site Plan (Pierce County 2010).

The Pierce County Sewer Utility owns the riparian areas alongside the north and south sides of the bay and along the impoundment above the dam, plus nearly all lands under the bay and impoundment itself. These areas are governed by the adopted Master Site Plan. The areas above and below the dam provide significant public recreation opportunities including hiking, skim boarding, fishing (fresh and saltwater), kayaking, and bird and wildlife watching (Pierce County 2010).

Lower Chambers Creek Road runs from University Place along the north side of the ravine and shifts to the south side of the bay via a bridge on the upstream side of the dam. The dam is a sloping structure that is approximately 12 feet high, and may potentially be overtopped by saltwater during very extreme high tide conditions. However, no historic evidence of overtopping has been found (Pierce County 2010). After crossing the bridge, lower Chambers Creek Road/Lafayette Street runs along the south side of the bay through the town of Steilacoom, connecting to the cities of Lakewood and DuPont, Joint Base Lewis-McChord, and I-5.

In addition to local utilities, major natural gas transmission lines, water transmission lines, and sanitary sewer collection lines are located under Chambers Creek Road adjacent to the estuary and dam. Major electrical transmission lines span Chambers Creek Canyon in the action area (Pierce County 2010). More detailed information on existing utilities and the need for utility relocations will be required to support subsequent design phases.

The former paper mill site is a large, flat impervious area created in the 1920s by the use of water cannons blasting the adjoining hillsides into Chambers Bay. It was at that time when Garrison Springs was extended via culvert to the new shoreline. Near the mouth of the bay, a small private marina exists on filled land of a former lumber mill lying behind the railroad causeway (Pierce County 2010).

The BNSF railroad runs across the shoreline at the mouth of Chambers Bay on an elevated berm. The natural and historic entrance to the bay was relocated in 1916 by the construction of the causeway and bridge (Pierce County 2010). The dual-track Chambers Bay BNSF bridge is a unique lift bridge. Its dual counterweights act in an opposing pivot to lift the short drawspan, thus allowing boats to pass in and out and maintaining the navigable waterway. The BNSF mainline (dual and triple track with 60 to 80 trains per day) is shared with the Union Pacific Railroad and Amtrak. This is the major route that connects the ports of Vancouver, British Columbia, and Los Angeles, California, through Seattle and Tacoma, Washington, and Portland, Oregon (Pierce County 2010).

As noted above, most of the land on the north and south sides of the bay, under the bay and the impoundment, and in the adjacent riparian areas is in public ownership (Pierce County Sewer Utility). The former paper mill site is privately owned, is being demolished and is currently for sale. Downstream of the former mill site on the south shoreline, the land is in both public and private ownership.

Ownership will need to be verified, but it appears there are only a few larger parcels, with a relatively small number of public and private landowners (e.g., five or fewer) who own the shoreline and submerged areas. WDFW owns and operates a fish capture and acclimation facility adjacent to the Chambers Creek dam in conjunction with its Garrison Springs hatchery. The dam was constructed in 1938 to impound water for use by the

gravel mine (now County-owned), paper mill, and state fisheries operators (Pierce County 2010). Fish ladders were installed at the same time. The County continues to use its senior water rights from the impoundment (adjacent pump structures). WDFW uses water on a pass-through basis, and the former mill owner is currently not utilizing their water pumping facilities adjacent to the dam (Pierce County 2010).

Ownership of the dam itself is not fully clear due to the complex nature of the originating agreements. Ownership will likely be determined by Pierce County and the mill owner through a separate process. It is clear that the dam is located on Pierce County Sewer Utility property.

The existing storm drainage infrastructure for the abandoned mill will likely be modified during the demolition and eventual redevelopment processes. As noted above, culverts drain Garrison Springs and other natural drainages to the bay. Nearly all of the runoff from lower Chambers Creek Road from 64th Street West, past the wastewater treatment plant, former mill, and from the residential developments on the south side of the bay, drains into the estuary and adjacent natural drainages with little or no treatment (Pierce County 2010).

4.3 Restoration Design Concept

4.3.1 Restoration Overview and Key Design Assumptions

The railroad causeway and Chambers Creek dam inhibit the free flow of tidal and fluvial waters. These features, along with shoreline armoring and private development in the estuary, are impacting the natural geomorphic processes that are responsible for creating and maintaining nearshore habitat. Removal of these features will allow for tidal hydrology, the natural transport of sediment, and freshwater inputs across the current and historic Chambers Bay Estuary.

The restoration alternatives are illustrated in Figures 4-3 through 4-8. A key assumption regarding removal of the dam is that the water rights associated with the impoundment and fish hatchery can be accommodated through alternative approaches or at other locations. Restoration will also rely on cooperation of private and public landowners who are affected by the project. Acquisition of private and public properties in whole or in part may be required to accommodate restoration activities.

The full restoration alternative (Figure 4-3) would entail:

- Removing the dam, contaminated sediment, and nearshore armoring and fill.
- Removing and relocating the road bridge upstream of the dam.
- Removing fill at the dam, road bridge, former mill site, along the road and railroad alignment, and at an isolated location just upstream of the former mill.
- Relocating lower Chambers Creek Road, major infrastructure (transmission and collection systems), and local utility services, and removing the inactive railroad tracks to the former mill.
- Daylighting and restoring Garrison Springs Creek and No Name Creek in the adjacent ravine, which runs through the former mill property.
- Replacing the railroad berm and shorter causeway with a full spanning trestle.
- Removing the covered boat moorage and marina currently located between the BNSF railroad and the historic barrier beach.

- Removing the marina armoring, fill, and buildings on the historic barrier beach.
- Restoring/protecting the historic tidal wetland bench along the north shoreline near the mouth while protecting known archaeological/cultural resources in that location.
- Removing invasive vegetation and replanting with native vegetation.
- Replacing, relocating, and/or acquiring existing surface water resources (e.g., via new groundwater or surface water rights) and related infrastructure.

The partial restoration alternative would include (Figure 4-4):

- Removing the dam, potentially contaminated sediment, and nearshore armoring and fill.
- Restoring the former paper mill site through a more limited daylighting of Garrison Springs Creek, removing shoreline armoring and some fill, a more limited setback of Chambers Creek Road/utility alignment away from the shoreline, and regrading and revegetating the new aquatic and riparian areas.
- Removing the inactive railroad track downstream of the former mill site, relocating the road and utilities away from the shoreline, removing shoreline armoring, regrading the shoreline, and planting riparian vegetation.
- Removing invasive vegetation and replanting native vegetation along the north shoreline.
- Restoring/protecting the historic tidal wetland bench along the north shoreline near the mouth while protecting known archaeological/cultural resources in that location.
- Replacing, relocating, and/or acquiring existing surface water resources (e.g., via new groundwater or surface water rights) and related infrastructure.

The partial restoration alternative would allow more muted tidal hydrology and sediment erosion and accretion processes at the mouth of Chambers Bay compared to the full restoration alternative. The partial restoration alternative does not widen the existing opening at the mouth created by the railroad trestle. Although the limited opening may provide some tidal impoundment during outgoing tides, it is roughly the same opening width as was shown in the historic T-sheets. The partial restoration alternative would not reactivate the historic barrier beach east of the trestle. The partial restoration alternative as it pertains to roads and utilities is similar to the full restoration alternative, though reduced in scale (Figure 4-4). The extent of the realignment and the amount of nearshore fill removal (Chambers Bay Road) is more limited in the partial restoration alternative. No changes are proposed to the railroad berm in the partial restoration alternative.

An overview of the key components of the full and partial restoration alternatives is provided in Table 4-1.

Table 4-1. Key Design Elements

Element	Full Restoration	Partial Restoration
Chambers Creek Dam	Remove dam structure, support buildings, and abutment fill	Same as full restoration
Impounded Sediments	Remove impounded sediments behind dam	Same as full restoration
Water Pumping Facilities	Replace, relocate, and/or acquire existing surface water resources (new groundwater or surface water rights) and related infrastructure	Same as full restoration
Chambers Creek Road Bridge	Replace bridge with full span, remove abutment fill, and replace utilities at bridge crossings	Similar to full restoration but with less realignment and fill removal
Mill Site Fill	Remove fill to re-establish historic MHHW line at the Mill Site	Remove fill to daylight Garrison Springs Creek
Garrison Springs Creek	Daylight creek	Same as full restoration
Unnamed creek	Daylight creek	Daylight mouth of creek; replace culvert under Chambers Creek Road
Inactive Railroad	Removal inactive rail spur	Same as full restoration
Lower Chambers Creek Road	Realign roadway into railroad spur footprint; new bridge across Garrison Springs Creek; flatten slopes of road armoring; replace large riprap with smaller shoreline erosion protection aggregate; realign utilities as necessary for new road alignment; remove bulkhead	Similar to full restoration but no bulkhead removal
Marina	Remove marina structures in upland and in-water areas; remove marina fill and paving on historic sand spit/barrier beach; restore barrier beach	No change from existing condition
BNSF Railroad	Remove existing berm fill and railroad bridge, replace with full-span rail bridge	No change from existing condition

4.3.2 Restoration Features – Primary Process-Based Management Measures

Armor Removal/Modification

The south bank of Chambers Creek along Chambers Creek Road is heavily armored with quarry spall and larger rock riprap to protect the road. Both the full and partial restoration alternatives entail shifting Chambers Creek Road further from the shoreline, into the alignment of the abandoned BNSF spur and portions of the mill site property. Shifting the road will allow the slope to be flattened as described under *Topography Restoration* below. This flattening would eliminate the need for rock armoring in many areas, and reduce the size of armor needed in constrained areas where the road cannot

be significantly moved. Where armor is still required on the newly graded steeper slopes, the armor would be further modified by placement of an overlay of finer-grained substrate to fill the interstices of the armor (see *Substrate Modification* section below).

South of the mill site it is assumed that the roadway would shift approximately 20 to 30 feet under the full and partial restoration alternatives. At the mill site, the road is assumed to shift even farther.

Unique to the full restoration alternative, additional armor will be removed from the Chambers Creek Estuary. As part of the railroad berm removal, armoring associated with the berm fill would be removed. In addition, armoring currently protecting the shoreline of the marina would be removed under the full restoration alternative. Neither area of armoring would be changed under the partial restoration alternative.

The full restoration alternative results in approximately 8,100 LF of armor removal along the rail causeway, at the marina, at the mill site, and along Chambers Creek Road south of the mill. The size of the armor to be removed will be determined during subsequent design phases. The full restoration alternative also results in 1,000 LF of armor modification along the Chambers Creek Road corridor where access is constricted; buried armor would be used with an overlay of finer grained substrate. The partial restoration alternative results in approximately 2,900 LF of armor removal at the mill site, and 1,000 LF of armor modification.

Berm or Dike Removal/Modification

The full restoration alternative includes removal of the BNSF berm fill at the mouth of Chambers Bay, and replacement of this fill with an elevated railway trestle (Figure 4-3). As part of this work, the existing BNSF drawspan bridge would be removed. Based on LiDAR topography, the crest elevation of the berm is interpreted to be elevation 24.7 feet MLLW (21 feet NAVD88), with a crest width of approximately 25 feet and side slopes estimated to be 2H:1V. Removal of approximately 1,300 LF of the berm would entail excavation of an estimated 68,000 CY of material (not including the armor removal discussed elsewhere) under the full restoration alternative. BNSF would be in favor of an action that would remove the drawspan, as maintaining and operating this span impacts BNSF operations on this portion of the rail corridor.

Under the partial restoration alternative, the berm would remain and there would be no change in this area (Figure 4-4).

Channel Rehabilitation/Creation

Under the full and partial restoration alternatives, the dam across Chambers Creek would be removed (see *Hydraulic Modification* section below). This dam was constructed in 1938 (Pierce County 2010) and is listed as 22 feet high (no elevation or reference datum provided) in the Washington dam database. It is presumed that during its operation, sediment has been impounded on the upstream side of the dam, although the thickness of impounded sediments is unknown.

Following dam removal, it is anticipated that impounded sediments will be scoured and transported downstream. In order to control the rate of scour and to minimize unintended consequences associated with this downstream transport of sediment, the full and partial restoration alternatives include some excavation of the impounded sediments to create a preferential channel for the initial flow of the restored Chambers Creek.

For estimate purposes, it is assumed that up to a 3-foot-deep channel would be created (Figures 4-5 and 4-6). Considering typical dredging tolerances, the volume estimate also includes an additional 2-foot allowable overdredge, resulting in a total volume based on an assumed 5-foot thickness of sediments excavated from a channel behind the dam prior to dam demolition. The actual thickness of impounded sediments, as well as sediment quality (chemistry), and design of the channels, would need to be confirmed during detailed design. Removal of up to 5 feet of sediments would result in a volume of 7,300 CY.

Groin Removal/Modification - NA

Hydraulic Modification

Both the full and partial restoration alternatives entail the removal of the Chambers Creek dam and the associated abutment fill and supporting structures (Figures 4-3 and 4-4). State dam records (Ecology 2010) list the dam as an earthen structure and indicate a crest length of 170 feet; aerial photography indicates that the visible spillway portion of the dam is 100 feet wide. The dam is listed as 22 feet high, and the spillway crest is interpreted to be at approximate elevation 16.7 feet MLLW (13 feet NAVD88) based on LiDAR records.

Removal of the dam would entail excavation of an estimated 6,200 CY of fill in the spillway area, as well as appurtenant structures such as sheet piles and fish ladder. Removal of the additional fill associated with the dam abutments is discussed under *Topography Restoration* below.

Overwater Structure Removal

Under the full restoration alternative, 77,100 SF of overwater structures associated with the floating docks and covered boat slips at the marina would be removed. The partial restoration alternative does not include overwater structure removal.

Topography Restoration

Topography restoration would occur in multiple locations under both the full and partial restoration alternatives. At the dam, fill from both abutments would be removed. Under the full and partial restoration alternatives, this amounts to an estimated 90,100 CY of removal.

Under the full restoration alternative, 236,000 CY of fill from the former mill site would be removed (Figures 4-3 and 4-5). Under the partial restoration alternative, an estimated 144,000 CY of fill would be removed to daylight Garrison Springs Creek and to provide a setback for Chambers Creek Road through the mill site (Figures 4-4 and 4-6).

Under the full restoration alternative, south of the mill site, an estimated 11,000 CY of fill would be removed (including bulkhead backfill) to realign Chambers Creek Road. Under the partial restoration alternative, an estimated 3,700 CY of fill would be removed in this area.

At the marina, an estimated 46,600 CY of fill would be removed under the full restoration alternative to restore the historic topography of the sand spit/barrier beach that existed before the railroad berm was constructed. No fill would be removed from this area under the partial restoration alternative.

Across the creek from the marina, the tidal wetland would be restored through excavation of fill. Based on a review of LiDAR topography, an estimated 2 feet of material

would be excavated over 1 acre under both the full and partial restoration alternatives, resulting in 6,500 CY of removal.

4.3.3 Restoration Features – Additional Management Measures

Beach Nourishment

Beach nourishment applies to the full restoration alternative in the areas that will be directly affected by the removal of the railroad causeway and marina. Historically, this area was a sand spit/barrier beach, and excavation of fill (as discussed under *Topography Restoration*) will restore grades here. At the barrier beach, the quality of the material that will be exposed at the base of the excavation during topographic restoration is unknown. In addition, a limited sediment supply from the armored drift cell to the south is impacted by the presence of the railroad. Therefore, it has been assumed that once the restored grade has been established, some beach nourishment will be necessary to provide a more natural barrier beach substrate on the excavated surface.

The full restoration alternative includes 4.1 acres of beach nourishment in the area of the topography restoration in the marina, with an assumed depth of 2 feet of beach nourishment fill consisting of sand and gravel. Because this area is unchanged in the partial restoration alternative, there is no beach nourishment associated with that action.

Contaminant Removal/Remediation

The potential for contamination of fill material at the mill site has been identified, and targeted removals of contaminated soils have been completed at the site. This work was accomplished by the landowners under a Remedial Investigation/Feasibility Study process in cooperation with Ecology (CH2MHill 2007). While it is believed that most contaminated soil has been removed from the site, there is the potential for additional contaminated soils to be present.

The full and partial restoration alternatives remove significant amounts of fill associated with the mill. Because the potential for soil contamination is unknown, an allowance of 2,000 CY has been assumed to be contaminated for the full restoration alternative, and 1,000 CY for the partial restoration alternative.

In addition to soils associated with the former mill site, impounded sediments are proposed for removal behind the dam. It is unknown whether contamination is present in impounded sediments. However, it is possible that contamination may be present based on historic and court evidence of extensive use of copper sulfate for algae treatments in Lake Steilacoom, and urban runoff/spills from the Tacoma Landfill and residential/commercial areas of West Tacoma, Fircrest, University Place, and Lakewood (Pierce County 2010). The estimates assume 50% of the material excavated as impounded sediments is at or above thresholds requiring remediation. This equates to approximately 3,500 CY of sediment for the full and partial restoration alternatives. This assumption is unverified and has been made for planning purposes only. The nature and extent of potential contamination will need to be determined during subsequent design.

It would be important to remove all contamination from impounded sediments (even beyond the footprint of removal depicted in Figures 4-3 and 4-4) prior to dam removal in order to prevent the potential redistribution of contamination downstream after the dam is removed.

Full restoration includes removal of fill at the marina. There are no known or documented sources of potential contamination in this fill, and thus it has been assumed

that additional contaminated soil removal would not be required in this area under the full restoration alternative. The soil quality at the marina will need to be more fully evaluated to confirm this assumption during subsequent design.

There is a data gap regarding the potential presence and/or distribution of contamination at the mill site, in impounded sediments, and at the marina. Additional chemistry data would need to be collected during subsequent design phases to more fully understand the potential volumes and costs associated with contaminant removal, and the net benefit of implementing this management measure for each restoration alternative in the Chambers Bay Estuary.

Debris Removal

Under the full and partial restoration alternatives, derelict creosote piles would be removed from the estuary. Most of the piles identified appear to be associated with a historic dock that may have been present in the marina area. Based on review of shoreline aerial oblique photos, an allowance for removal and disposal of up to 150 piles has been included, although an actual inventory would need to be made during detailed design.

In addition to derelict piles, there is occasional debris, including concrete rubble, along the shoreline. The amount and distribution of debris has not been quantified. For estimating purposes, an allowance for up to an additional 100 tons of debris removal and disposal has been assumed for the full and partial restoration alternatives. This allowance would need to be reevaluated during detailed design.

Invasive Species Control

Invasive species will be removed and replaced from multiple areas under both the full and partial restoration alternatives, as described under the *Revegetation* discussion. Due to the heavy Himalayan blackberry and Scot's broom presence on the north slope of Chambers Bay, it has been assumed that an herbicide suitable for use near aquatic environments would be applied after clearing and grubbing this 8.4-acre area.

Large Wood Placement - NA

Physical Exclusion - NA

Pollution Control - NA

Revegetation

Portions of the hillside on the north bank of Chambers Bay are currently covered by non-native invasive vegetation. In addition, removal of fill at the former mill site and along Chambers Creek Road will present opportunities for revegetation of riparian corridors and replacement of impervious pavement with native plant species. In both the full and partial restoration alternatives, approximately 8.4 acres of the slope north of Chambers Bay would be cleared of invasive plants and revegetated with native species.

Revegetation with emergent estuarine marsh and backshore beach species would be performed as part of the restoration of the tidal wetland near the marina on the north side of Chambers Bay under the full and partial restoration alternatives. An estimated 1 acre would be revegetated with estuarine and backshore beach species. Additional estuarine species growth and development is expected to occur naturally (without planting) on the restored barrier beach and at the former marina under the full restoration alternative. Additional colonization by estuarine marsh species is anticipated upstream of the dam removal and at the former mill site. The precise area is difficult to quantify due to anticipated changes in sediment distribution affecting tidal elevations in

these areas. The extent of predicted estuarine marsh colonization in these areas will be determined in subsequent design phases.

Finally, under the full restoration alternative, an estimated 6.7 acres of land at the former mill site would be revegetated with native riparian vegetation after fill is removed and pavement demolished. An estimated 1.9 acres of native riparian revegetation would be included at the mill site.

Reintroduction of Native Animals - NA

Substrate Modification

Substrate will be modified in areas where shoreline excavation (i.e., topography restoration) is performed under both the full and partial restoration alternatives. Because of the unknown quality of material that will be exposed on the excavated surface, it has been assumed that a 2-foot-thick overlay of sand and gravel (below the MHHW line) would be applied to restore the excavated surface to more natural conditions. Above MHHW, a transition to topsoil will occur to support riparian vegetation. For both the full and partial restoration alternatives, an estimated 2.4 acres of substrate would be modified in the area topographically restored at the dam abutments.

For the full restoration alternative, it has been estimated that 8.1 acres of substrate would be modified at the mill site with similar material as at the dam abutments.

Under the partial restoration alternative, it is assumed that 6.2 acres of substrate would be modified at the mill site.

Species Habitat Enhancement - NA

4.3.4 Restoration Features – Other

NA

4.3.5 Land Requirements

Land ownership is a combination of public and private. Private parcels and some public parcels/rights would need to be acquired in full or in part for both restoration alternatives. Major transmission/collection systems and local utilities would need to be relocated under Chambers Creek Road, and at the Chambers Creek Road bridge crossing upstream of the dam.

For the full restoration alternative, an estimated 12.4 acres of public land and 31.1 acres of private land would be directly affected by the action. For the partial restoration alternative, an estimated 11.9 acres of public land and 9.5 acres of private land are directly affected.

4.3.6 Design Considerations

The dam provides impounded water for use by Pierce County, the former paper mill and WDFW. Significant quantities of perfected and senior water rights are directly associated with the dam and its impoundment. Source replacement and compensation for these water rights and water quantities will need to be addressed prior to removal of the dam and upstream sediment (Pierce County 2010). The dam is also used as a fish capture and acclimation facility and to collect hatchery broodstock, so the design must consider an alternative facility option to serve that function. Preliminary discussions between the local proponent and WDFW have identified the potential to relocate the hatchery

operations to Garrison Creek at the former paper mill site after the culverted portion of the creek drainage has been daylighted.

The dam and the WDFW capture and acclimation facility currently restrict upstream passage of all fish species (non-hatchery species are currently released to continue upstream). Through preliminary discussions, the local proponent has learned that NMFS has a concern about non-native Chinook entering the Chambers Creek system because this would negatively impact a naturally spawning wild population.

Potential contamination of sediment upstream of the dam and at the former paper mill is also an important consideration. Both of these issues will require further investigation during subsequent phases of design.

Chambers Creek Road is a major route connecting University Place and other communities to the north (Tacoma, Fircrest, Gig Harbor, etc.) with the town of Steilacoom, cities of Lakewood and DuPont, Joint Base Lewis-McChord, and I-5. Lower Chambers Creek Road/Lafayette Street is an important and highly traveled commuter and local traffic route with an average of more than 9,300 vehicles per day (Pierce County 2010). Vehicular access must be maintained on this route. Maintaining emergency access is a requirement along this route as there are limited arterial routes into and out of Steilacoom.

Right-of-way acquisition and issues with relocating a portion of the road, utilities, and the creek bridge could be significant. Because of the constrained width of the roadway corridor in the area of the bulkhead, a new, shorter bulkhead may be required to support Chambers Creek Road so that flatter, more natural slopes could be created in the estuary in front of the bulkhead under the full restoration alternative. The constrained Chambers Creek roadway corridor also presents a limitation on potential roadway setbacks, and thus limits the degree to which creek slopes can be flattened in some areas. Depending on hydraulic modeling that would need to be completed during detailed design, some areas might require larger armor rock to be placed to ensure the stability of the roadway corridor. If those conditions are identified during detailed design, it is assumed the armor materials would be buried beneath a surface treatment of a more natural, habitat-compatible substrate.

For the full restoration alternative, the proposed railroad trestle will be constructed on the east side of the existing rail to maintain rail service along this corridor. The proposed double-track railway bridge would consist of 80-foot spans with modified American Association of State Highway and Transportation Officials (AASHTO) Type IV girders. Each bent would consist of 4-foot-diameter columns with 7-foot-diameter drilled shafts (Figure 4-7B and 4-8). The drilled shaft embedment depth is assumed to be 100 feet. Other bridge types such as pile-supported trestle would be investigated during later stages of design. No railway bridge is proposed for the partial restoration alternative.

The full restoration alternative has two proposed vehicle bridges (Figure 4-7). The first bridge will be approximately 370 feet long, with two spans of about 185 feet consisting of 7-foot-11-inch-deep spliced pre-cast concrete girders. The second bridge will be approximately 200 feet long, with two spans of about 100 feet consisting of 5-foot-2-inch-deep pre-cast concrete girders. Concrete bridges require very little maintenance. The current standard is to inspect bridges every 2 years.

The partial restoration alternative also has two proposed vehicle bridges (Figure 4-7). Both proposed bridges will be approximately 200 feet long, with two spans of about 100 feet consisting of 5-foot-2-inch-deep pre-cast concrete girders.

Chambers Creek Road today is a two-lane roadway with paved shoulders. A left-turn lane located at the entrance to the marina allows northbound vehicles a refuge for turning into the marina. It was likely constructed to address a sight distance deficiency and prevent rear-end collisions. The restoration concepts will bring the roadway up to the current design standards which would provide 12-foot travel lanes and sidewalks. Under the full restoration alternative, the left-turn provision is not proposed since the marina would no longer exist. Under the partial restoration alternative, the limits of roadway improvements do not extend to this area.

There is a gap in improvements along Chambers Creek Road under both alternatives between the existing mill site and the bridge over Chambers Creek (within unincorporated Pierce County). Improvements to add sidewalks and accommodate parking have not been included as part of the restoration at this time; however, during design, inclusion of sidewalks along this portion should be evaluated through consultation with Steilacoom, University Place, and Pierce County Public Works. Between the former mill and the bridge, the shoulders are heavily used for on-street parking, and to provide access to off-street areas also used for parking.

The changes to the Chambers Creek Road alignment and replacement of the bridge over Chambers Creek pose significant impacts to utilities and cultural resources known to be located in that area (currently protected by roadway). Along Chambers Creek Road, 5,100 LF of overhead distribution power lines would require relocation with the full restoration alternative, and 2,500 LF will be relocated under the partial restoration alternative (Figures 4-3 and 4-4). This includes a portion along the limits of the proposed realignment near the mill site and at the creek crossing, where it has been assumed that poles will need to be relocated and wires raised. This is because the new bridge will be at a higher elevation, and due to changes to the topography as a result of the dam removal and changes to the roadway.

A water main and sanitary sewer force main also run the length of Chambers Creek Road within the action area limits. These too would be relocated within the same limits as described for the electrical lines above, and would be supported from the bridges at the water crossings. The water main today crosses Chambers Creek on a series of piles. Assuming that the pile-supported water main may be compromised once the dam is removed and the topography changes, the water main and sewer force main would be relocated to the bridge.

Intersection improvements would be needed at the north end of the bridge to transition the roadway to the existing grades. There are a significant number of utilities in this intersection including a sewer lift station, electrical duct banks and manholes, high-pressure gas, water, and sewer. Some adjustments to final grade are anticipated for the lift station manhole, and it has been assumed that some relocation of the other utilities will be necessary due to unavoidable conflicts during construction.

The proponent has stated a need for stakeholder and public coordination during subsequent phases of design given the scope of this action and multiple stakeholders involved (SPSSEG 2010).

4.3.7 Construction Considerations

The restoration work would be performed using commonly available demolition and earthwork equipment, from both the water and land. Excavation of impounded sediments under the full and partial restoration alternatives would need to be performed before or in conjunction with dam removal in order to minimize the downstream transport of sediments after the dam is completely removed.

The utility and bridge crossings upstream of the dam create difficult constraints for conventional mechanical excavation equipment and methods. It may be necessary to use hydraulic excavation methods due to limited clearance beneath overwater utilities and between utility and bridge foundation supports. If mechanical excavation methods are feasible, access for staging mechanical equipment is limited. A portable, flexi-float type barge would need to be lifted into the Chambers Creek dam impoundment in pieces, and assembled once in the water to support a mechanical dredging operation.

Prior to topography restoration at the dam, upland structures and supporting utilities would need to be demolished. The dam includes sheet pile bulkheads and a sheet pile fish ladder that would be demolished as well.

For the proposed vehicle bridges, a drilled-shaft oscillator would be used to install the drilled shafts. To eliminate access challenges for installation of the center pier foundation at the Chambers Bay Creek crossing, a single-span bridge should be considered during later stages of design. It is assumed that the contractor will be able to install one shaft per week. Large-diameter casing shoring would be required to keep out water and allow access to the top of the shaft for column form placement and removal. Once the shafts are installed, the columns are cast inside the shoring casing. After the casing is removed, the cast-in-place pilecaps and bridge superstructure are constructed.

Limited-duration closures of the roadway during construction of the Chambers Creek bridge have been assumed to be feasible (based on post-earthquake related closure impacts). A detour would be established to direct traffic to and from the town of Steilacoom to follow Steilacoom Boulevard SW to Custer Road SW and then to Bridgeport Way West as an access route to Lakewood and University Place. Coordination with Public Works and emergency services would be needed during design to verify this plan would be acceptable. Maintaining local access from the south (via Steilacoom) and from the north (via University Place) would be required as there are existing developments and critical facilities lacking other access options. The alternative to closing Chambers Creek Road during bridge construction would be to construct the new bridge on an alignment offset from the existing alignment.

Realignment of Chambers Creek Road south of the bridge would be done after demolition of the mill site and the abandoned BNSF rail spur. During road realignment, traffic flow on the existing road would need to be maintained due to the critical nature of this roadway. Thus Chambers Creek Road will remain open to traffic during most of construction. Within certain limits, however, the roadway will be restricted to a single lane with flaggers and spotters for a period of time.

Under both the full and partial restoration alternatives, topography restoration at the mill site would need to be staged so that the existing road could be maintained while the Garrison Springs Creek excavation occurred, and while the new bridge over Garrison Springs is constructed. Once a new alignment of Chambers Creek Road is in operation, removal of the existing road and topography restoration along the shoreline in this area could be completed.

Under the full restoration alternative, the bulkhead supporting Chambers Creek Road would not be demolished until the roadway was realigned and in operation.

The BNSF causeway provides significant wave protection to Chambers Bay. Under the full restoration alternative, removal of the causeway would be one of the last restoration actions taken so that the remainder of the restoration upstream of the causeway could be completed under relatively protected conditions. In order to remove the causeway, a

parallel alignment for the BNSF railroad would need to be constructed so that train service could be maintained during construction.

Building along the same rail alignment was not assumed possible given the challenges with removing the drawspan bridge while maintaining regular bridge traffic. With the inboard alignment, piles or drilled shafts would likely need to be installed from a barge. Once the drilled shafts are installed, the basic construction sequence would be casting the columns and pilecaps, setting the bridge girders with a crane, and finally placing the ballast, ties and rail. New track connections to the existing rail will be required to be constructed by BNSF union workers.

Under the full restoration alternative, structures would need to be demolished and utilities and pavement removed before grading work would be completed at the marina.

The full restoration alternative is expected to require approximately 3 years for construction. The partial restoration alternative is expected to require 2 years for construction. Property acquisition, design development, and permitting timelines are not included in these durations. However, in both alternatives, the time required to complete these upfront activities is expected to be substantial.

It is assumed for full and partial restoration that all excavated and demolished materials will be disposed of offsite in an upland location. Specific disposal sites will need to be identified in later design phases, but are assumed to be within 20 miles of the project site. Certain materials are expected to contain contaminants and will require disposal at licensed facilities.

Staging and stockpiling is assumed to occur on one or more of the upland areas at the former mill site or adjacent to the dam. If this space is not adequate or permittable, arrangements for additional space will need to be made with Pierce County Sewer Utility for use of County lands to the west and north of the action area.

4.4 Extent of Stressor Removal

Table 4-2 presents the amount of stressor removal under both the full and partial restoration alternatives.

Table 4-2. Stressor Removal

Stressor	Full Restoration	Partial Restoration
Tidal Barrier (LF)	1,300	0
Fill (acres)	19.5	10.0
Armor (LF)	9,000	2,900
Nearshore Roads (LF)	2,985	1,979
Railroad (LF)	0 (see tidal barrier and breakwater/jetty	0
Marinas (acres)	4.1	0
Breakwaters & Jetties (LF)	1,300	0
Dams (LF)	100	100

4.5 Expected Evolution of the Action Area

Following full restoration, the opening at the mouth of the newly restored estuary and across the intertidal mudflats within Chambers Bay will migrate, erode, and accrete as

part of natural tidal hydrodynamic and sediment transport processes. The new tidal channel network excavated from the impounded sediments will likely become more complex than the single tidal starter channel that will exist immediately following construction.

Sediment deposition within Chambers Bay will be affected due to increased tidal currents into and out of the restored estuary. Substantial sediment from erosion of impounded materials is anticipated to deposit within the restored estuary, as well as along the shoreline, and may also be carried farther out into Puget Sound due to larger ebb tide currents. The degree to which this is expected to occur will be evaluated during a subsequent design phase.

The sediment deposition, freshwater inputs, and tidal hydrology within the restored estuary will support development of a more complex tidal channel network in the area of the current dam impoundment. Littoral transport along the shoreline will be affected by tidal currents into and out of the estuary, which may change the location and extent of shoreline features adjacent to the estuary mouth including the restored barrier beach.

The floodplain within the restored upper estuary (dam impoundment) will change dramatically from existing conditions following construction. The type and extent of vegetation will change within the restored upper estuary, as the environment shifts from primarily freshwater marsh in the reservoir to salt marsh and tidal channels. In addition, the impounded sediments from the dam will only be partially removed. The removal of the dam will result in a sustained lowering of the grades upstream of the current dam to a future equilibrium condition that will be lower than current grades where sediment has deposited.

Increased tidal flow and wave energy into the estuary will increase topographic and habitat complexity. Sediment transport processes (due to increased tidal and wave energy in the estuary) will induce patterns of sediment erosion (in tidal channels) and deposition (in backwater areas) within the estuary.

Garrison Springs would serve as the new location for salmon broodstock rearing to replace the hatchery that would be lost due to removal of the Chambers Creek dam. At the mouth of Chambers Bay, the BNSF railroad would continue to operate, but on an elevated trestle. However, the former sand spit/barrier beach at the present-day marina would be sustained through wave and tidal action, sediment transport from the drift cell to the south of the action area, and sediment discharges from Chambers Bay. Because sediment supply updrift and downdrift of the mouth of Chambers Bay will not be improved under either restoration alternative, the sand spit/barrier beach may require periodic monitoring and maintenance, including beach nourishment, if sediment sources are not adequate to ensure its continued function.

Under the partial restoration alternative, the evolution of the action area with respect to the Chambers Creek dam removal is similar to what would be expected under the full restoration alternative. Because the railroad berm is maintained under this alternative, wave energy would continue to be significantly more muted in the estuary. As a result, the development of channel complexity may be more limited and occur over a longer time than under the full restoration alternative. In addition, sediment transport within the bay will also occur over a longer timeframe than with full restoration.

4.6 Uncertainties and Risks

Full and partial restoration of the Chambers Bay Estuary present several uncertainties, risks and significant costs. The inability to acquire privately and publicly owned lands ,

such as the former mill site, dam and impoundment, the inactive railroad tracks, and the covered boat storage and marina (due to cost considerations, legal constraints and/or landowner willingness), could put some of the restoration objectives at risk.

Removal of the dam will potentially alter flood risks within Chambers Bay. The southern shoreline is presently within the A1 Zone on FEMA flood insurance maps. Increased fetch from removing the railroad berm in the full restoration alternative may increase the potential for wave setup and runup along the southern shoreline. The potential change in flood risks will need to be evaluated in more detail in subsequent design.

Pierce County has significant perfected and senior water rights and water quantities associated with the dam and its impoundment (Pierce County 2010). Under both the full and partial restoration alternatives, removal of the dam would require securing replacement water rights from another source. The dam also supports a WDFW fish hatchery. The former paper mill and WDFW also have water rights and appropriations. Removal of the structures around the dam would necessitate eliminating the hatchery, which may require replacement elsewhere, as well as potential resolution of water rights issues.

The former paper mill and sediments impounded above the dam very likely contain contaminants (based on historic information and current land uses in the watershed). The potential presence of contamination in marina fill soils is currently unknown. The nature and extent of contaminants in all these areas will need to be determined as part of subsequent design. Restoration actions would need to be coordinated with site cleanup.

Known and documented locations of pre-settlement cultural resources are currently protected by the bay's configuration, lower Chambers Creek Road, and existing infrastructure. While restoration aims to restore these pre-settlement conditions, there is some risk of encountering cultural resources with significant excavation activities. As the former paper mill site was created by hydroblasting adjacent hillsides to fill that portion of the bay, it is highly unlikely that the daylighting of the culverted extension of Garrison Springs would encounter any cultural resources (Pierce County 2010). The risks, costs and uncertainties will require further investigation.

Chambers Creek Road is a major arterial with average daily traffic of 9,300 vehicles. Restoration would need to preserve this capacity. Temporary traffic routing would be required through tight corridors to accommodate realignment of the road and bridge replacement. The roadway and action area contain significant corridors for major transmission/collection facilities and local utilities services. The financial and engineering feasibility of relocation of these facilities needs to be determined. These apply to both the full and partial restoration alternatives.

4.6.1 Risks Associated with Projected Sea Level Change

Sea level change is not believed to be a major issue with restoring the habitats in the bay due to the topography and public ownership. One risk and uncertainty at the barrier beach if the trestle is replaced is the lack of sediment supply from the historic drift cell to the south. This shoreline is now substantially armored by the BNSF railroad and may not have the available sediment supply to support this barrier beach spit. However, this risk and uncertainty is balanced by the sediment supply from within the Chambers Creek watershed and that is impounded by the dam. Once the dam is removed, only limited sediment is proposed to be removed to implement the restoration. The remaining accumulated sediment will be transported downstream over an extended period.

Estuarine habitat is expected to retreat further upstream into the Chambers Creek valley in response to sea level change. Given the steep walls of the creek upstream of the dam, sea level change has the potential to constrain the footprint of estuarine habitat compared to conditions that would exist during the period immediately following dam removal.

In terms of infrastructure, if a trestle replaces the BNSF berm and inadequate sediment supply results in significant barrier beach erosion, wave energy within the bay will increase and could threaten Chambers Creek Road if it is not raised and is no longer armored.

Table 4-3 compares potential risks associated with projected sea level changes based on professional judgment.

Table 4-3. Risks of Sea Level Change

	Projected Sea Level Change		
	High (65 cm)	**Intermediate (21 cm)**	**Low (13 cm)**
Full Restoration	Estuarine habitat would be expected to retreat upstream in response to sea level change. In steep walled areas upstream of the dam, the area available for estuarine habitat is expected to become constrained by projected sea level rise. Rail causeway will be replaced by a trestle that can be designed to accommodate sea level change. The current elevation of the existing causeway, 24.7 feet MLLW (21 feet NAVD) 88, is approximately 5 feet higher than the projected extreme high water elevation. Chambers Creek Road inundation would be expected if the road is maintained at its current elevation of 17.7 feet MLLW (14 feet NAVD 88). The road would need to be raised to accommodate sea level change.	Risks to estuarine habitat are similar, but lower than the high scenario. Risks to the rail trestle are similar, but lower than the high scenario. Chambers Creek Road at its current elevation would be approximately 0.4 feet higher than the projected extreme high water under this scenario. Wave action or creek flooding could overtop the roadway and cause erosion of the road base.	Risks to estuarine habitat are similar, but substantially lower than the high scenario. Risks to the rail trestle are similar to but substantially lower than the high scenario. Chambers Creek Road at its current elevation would be approximately 0.7 feet higher than the projected extreme high water under this scenario. Wave action or creek flooding could overtop the roadway and cause erosion of the road base.

	Projected Sea Level Change		
	High (65 cm)	**Intermediate (21 cm)**	**Low (13 cm)**
Partial Restoration	Estuarine habitat would be expected to retreat upstream in response to sea level change. In steep walled areas upstream of the dam, the area available for estuarine habitat is expected to become constrained by projected sea level rise. The rail causeway would be subject to greater erosion and would be expected to require additional armoring to accommodate sea level change. Chambers Creek Road inundation would be expected if the road is maintained at its current elevation of 17.7 feet MLLW (14 feet NAVD88). The road would need to be raised to accommodate sea level change under this scenario.	Risks to estuarine habitat are similar, but lower than the high scenario. Risks to the rail causeway are similar to but lower than the high scenario, plus the erosive forces would be marginally lower. Chambers Creek Road at its current elevation would be approximately 0.4 feet higher than the projected extreme high water under this scenario. Wave action or creek flooding could overtop the roadway and cause erosion of the road base.	Risks to estuarine habitat are similar, but substantially lower than the high scenario. Risks to the rail causeway are similar to the high scenario but substantially lower, plus the erosive forces would be lower. Chambers Creek Road at its current elevation would be approximately 0.7 feet higher than the projected extreme high water under this scenario. Wave action or creek flooding could overtop the roadway and cause erosion of the road base.

4.7 Potential Monitoring Opportunities

Monitoring is important for evaluating restoration success. A combination of field surveys and aerial photographs would be used to document biological and physical changes to the landscape. Monitoring data can be used to refine adaptive management and corrective actions, as needed. Some of the main monitoring needs and opportunities associated with this action are summarized in Table 4-4.

Table 4-4. Monitoring Needs and Opportunities

Monitoring Parameter	Key Performance Indicator	Note
Topographic Stability	X	Monitor sand spit/barrier beach
Sediment Accretion / Erosion	X	Monitor opening at the mouth of newly restored estuary and across the intertidal mud flats; monitor erosion of impounded materials and deposition within Chambers Bay; monitor littoral transport along the shoreline adjacent to the estuary mouth and restored barrier beach
Wood Accumulation		

Monitoring Parameter	Key Performance Indicator	Note
Soil / Substrate Conditions		
Vegetation Establishment	X	
Marsh Surface Evolution / Accretion		
Tidal Channel Cross-Section / Density	X	Monitor new tidal channel network excavated from the impounded sediments
Water Quality (contaminants)		
Salinity	X	Monitor temperature/salinity in the estuary
Shellfish Production	X	
Extent Of Invasive Species		
Animal Species Richness	X	
Fish (salmonid) Access/Use	X	Monitor changes in fish access/ use upstream of dam
Forage Fish Production		
Wildlife Species Use		
Effectiveness Of Exclusion Devices		

4.8 Information Needed for Subsequent Design

This conceptual design report represents an initial step in the restoration design sequence. The design concepts described above were developed based on readily available information without the level of site-specific survey and investigation that is necessary to support subsequent design and implementation. Substantial additional information will be required at the preliminary and later design stages to confirm the design assumptions, refine quantity estimates, address property and regulatory issues, obtain stakeholder support, and fill in data gaps. The extent to which this information is collected for preliminary design (or a later design stage) will depend upon the available budget, schedule, and other factors. This section attempts to define the most essential information needs for this action. Refer to the Introduction chapter for additional information.

- Property Investigation/Survey – More detailed information on parcel ownership, utilities, and property boundary location will be needed to finalize the design, confirm acquisition requirements, and support negotiations with property owners.
- Topographic/Bathymetric Survey – The survey data would be used to refine design of key project elements, improve quantity estimates, and develop detailed construction and demolition plans. Survey data could also be used as a baseline for pre- and post-construction modeling, including hydrodynamic modeling.
- Geotechnical Investigation – Additional geotechnical study on soils and sediments will be required to finalize design of the bridge and trestle foundations, to design excavation side slopes, and to determine the location, number, and condition of derelict piles and any other significant debris fields.

- Cultural Resources Investigation – Surveys for archaeological and historic resources may be required to determine the extent of known resources (e.g., under the roadway or on the historic spit) and the potential for additional cultural resources to be present in the action area.
- As-built Documentation – Future design efforts will need as-built plans for the Chambers Creek dam and possibly other site features. Identification and quantification of water resources, water rights, and related infrastructure within the action area will also be required.
- Hydraulic Analysis/Flood Modeling – Hydrological modeling may be required to determine potential flood flows and required shoreline treatments under current and future tidal conditions, including the potential effect of sea level change. This information would also be used to confirm the size of bridge and culvert openings. A temporary tide gage may be needed in the early design stages to obtain site-specific tidal statistics. For the full restoration alternative, wind/wave data collection and modeling would be necessary for the design of a trestle to replace the BNSF causeway.
- Hydrology and Hydraulics Analysis/Sediment Transport – Modeling will be necessary to evaluate upstream and downstream impacts and the potential magnitude of impounded sediment erosion and migration once the dam is removed.
- Contaminant Surveys – If preliminary investigations confirm that hazardous material is present in the action area, additional soil and sediment analysis may be needed. There is potential for contamination of sediment upstream of the dam and at the former mill. The potential for contamination in marina soils is unknown. Studies to identify beneficial reuse and/or disposal options for the excavated materials may be appropriate for this action. The introductory chapter describes the Phase I site investigations that are occurring as part of this overall effort via a separate contract.
- Fisheries – Hatchery run impacts on native fish need to be evaluated in coordination with NMFS in relation to the removal of the dam and relocation of the existing hatchery.

4.9 Quantity Estimates

The design quantities are largely developed from LiDAR data sets lacking the resolution to accurately quantify all elements of construction. These are supplemented by unmeasured estimates made during one site visit at high tide and areal take-offs from available imagery. The quantity spreadsheets for the full and partial restoration alternatives are provided in Exhibits 4-1 and 4-2.

4.10 References

CH2MHill. 2007. *Final Remedial Investigation/Feasibility Study Report*. Abitibi West Tacoma Mill. Steilacoom, WA. Prepared by CH2MHill. April 2007.

Ecology (Washington State Department of Ecology). 2010. *Inventory of Dams in the State of Washington*. Rev. June 2010. Publication 94-016. Accessed at: http://www.ecy.wa.gov/biblio/94016.html

Pierce County. 2010. Comments from Pierce County provided to Curtis Tanner of WDFW on PSNERP Action Characterization Reports. November, 2010.

South Puget Sound Salmon Enhancement Group (SPSSEG). 2010. Comments from South Puget Sound Salmon Enhancement Group provided to WDFW on PSNERP Action Characterization Reports. November, 2010.

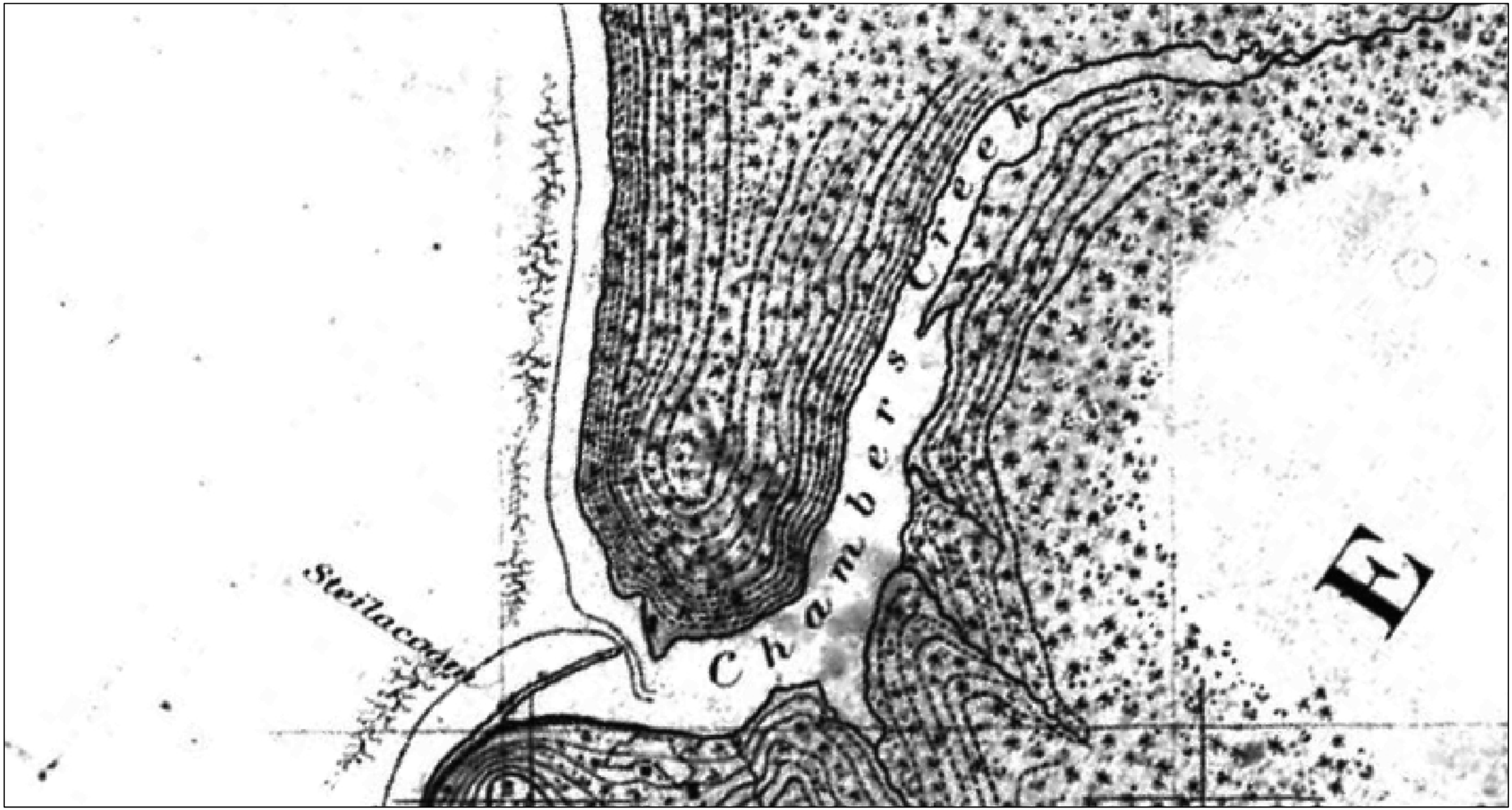

0 600
Feet
0 180
Meters

Puget Sound Nearshore Ecosystem Restoration Project (PSNERP) USACE Drawing FIle Number: D-1-1-64
WDFW Contract # 100-000204 (CAPS No. 10-1461)

Historic Map (T-Sheet)
Action Name: Chambers Bay Estuarine and Riparian Enhancement
PSNERP ID #: 1801
Figure 4- 2A

S:\GIS\Projects\210xxx\210337_PSNERP_NEARSHORE\Projects\2-TSheets_rev.mxd (DLP; 2/24/2011)

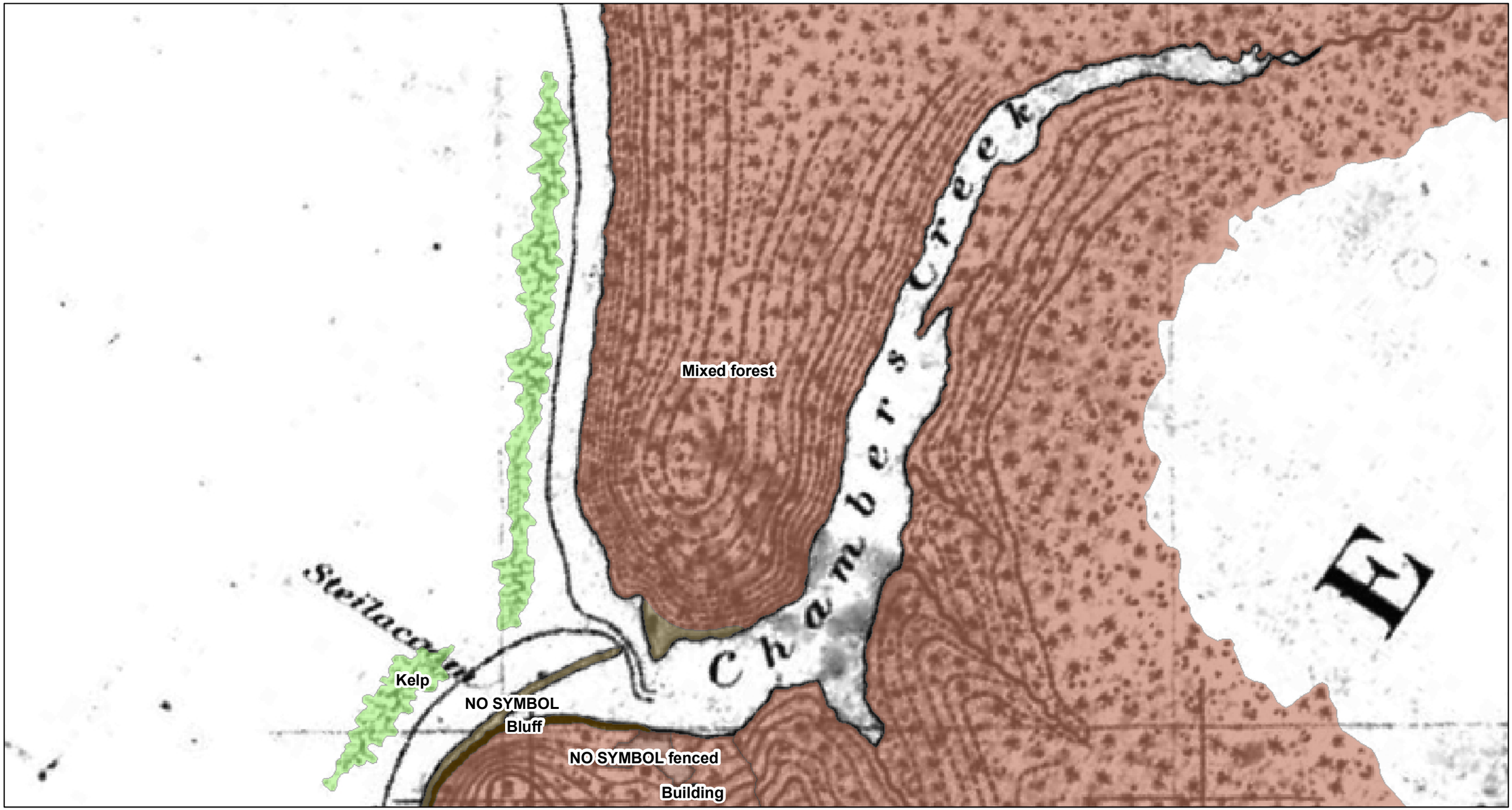

0 600
Feet
0 180
Meters

Puget Sound Nearshore Ecosystem Restoration Project (PSNERP) USACE Drawing FIle Number: D-1-1-64
WDFW Contract # 100-000204 (CAPS No. 10-1461)

Historic Map (T-Sheet) and River History Project Data
Action Name: Chambers Bay Estuarine and Riparian Enhancement
PSNERP ID #: 1801
Figure 4- 2B

S:\GIS\Projects\210xxx\210337_PSNERP_NEARSHORE\Projects\2-TSheets_rev.mxd (DLP; 2/24/2011)

Q:\Jobs\100379-01_WDFW_Strategic_Restoration\Maps\Chambers_Bay\AQ_WDFW_PSNERP_ChambersBay_FullRestoration_PlanView_final_v2.mxd ahook 2/24/2011 8:58:53 AM

Legend

- Bulkhead
- Channel Rehab/Creation
- Existing Stream
- Existing Tide MLLW
- Existing Tide MHHW
- Proposed Tide MHHW
- Other - Replace Armor
- Utility Relocation
- Hydraulic Structures - Large
- Dredging - Bucket - Marine
- Excavation - Lowland
- Excavation - Upland
- Removal - Marina
- Remove Buildings
- Remove Pavement
- Section Line
- Bridge
- Planting
- Proposed Railway
- Roadway Type A
- Required Project Lands

FIXED DATUM | TIDAL DATUM

MHHW — 9.77 FEET — NAVD88 — 3.74 FEET — MLLW

0.00 MLLW = -3.74 NAVD88
0.00 MHHW = 9.77 NAVD88

Source: VDatum

North

0 300 Feet

PUGET SOUND NEARSHORE ECOSYSTEM RESTORATION PROJECT

SOURCE: Washington Public Lands Database (2006); Washington Counties Parcels (2009); Bing Maps (2011)

Puget Sound Nearshore Ecosystem Restoration Project (PSNERP)

USACE Drawing FIle Number: D-1-1-64
WDFW Contract # 100-000204 (CAPS No. 10-1461)

Conceptual Design Plan
Site Name: Chambers Bay
Action Name: Chambers Bay Estuarine and Riparian Enhancment
PSNERP ID #: 1801
Full Restoration

Lead Contractor: ESA
Design Lead: Anchor QEA, John LaPlante
Date: 02/18/2011

Figure 4-3

Q:\Jobs\100379-01_WDFW_Strategic_Restoration\Maps\Chambers_Bay\AQ_WDFW_PSNERP_ChambersBay_PartialRestoration_PlanView_final_v2.mxd ahook 2/24/2011 9:03:45 AM

Legend

- Utility Relocation
- Hydraulic Structures - Large
- Existing Stream
- Existing Tide MLLW
- Existing Tide MHHW
- Proposed Tide MHHW
- Channel Rehab/Creation
- Other - Replace Armor
- Section Line
- Bridge
- Dredging - Bucket - Marine
- Excavation - Lowland
- Excavation - Upland
- Planting
- Proposed Roadway Type A
- Remove Pavement
- Required Project Lands

FIXED DATUM | TIDAL DATUM

MHHW — 9.77 FEET — NAVD88 — 3.74 FEET — MLLW

0.00 MLLW = -3.74 NAVD88
0.00 MHHW = 9.77 NAVD88

Source: VDatum

North

0 200 Feet

PUGET SOUND NEARSHORE ECOSYSTEM RESTORATION PROJECT

SOURCE: Washington Public Lands Database (2006); Washington Counties Parcels (2009); Bing Maps (2011)

Puget Sound Nearshore Ecosystem Restoration Project (PSNERP) USACE Drawing FIle Number: D-1-1-64

WDFW Contract # 100-000204 (CAPS No. 10-1461)

Conceptual Design Plan
Site Name: Chambers Bay
Action Name: Chambers Bay Estuarine and Riparian Enhancment
PSNERP ID #: 1801
Partial Restoration

Lead Contractor: ESA
Design Lead: Anchor QEA, John Laplante
Date: 02/18/2011

Figure 4-4

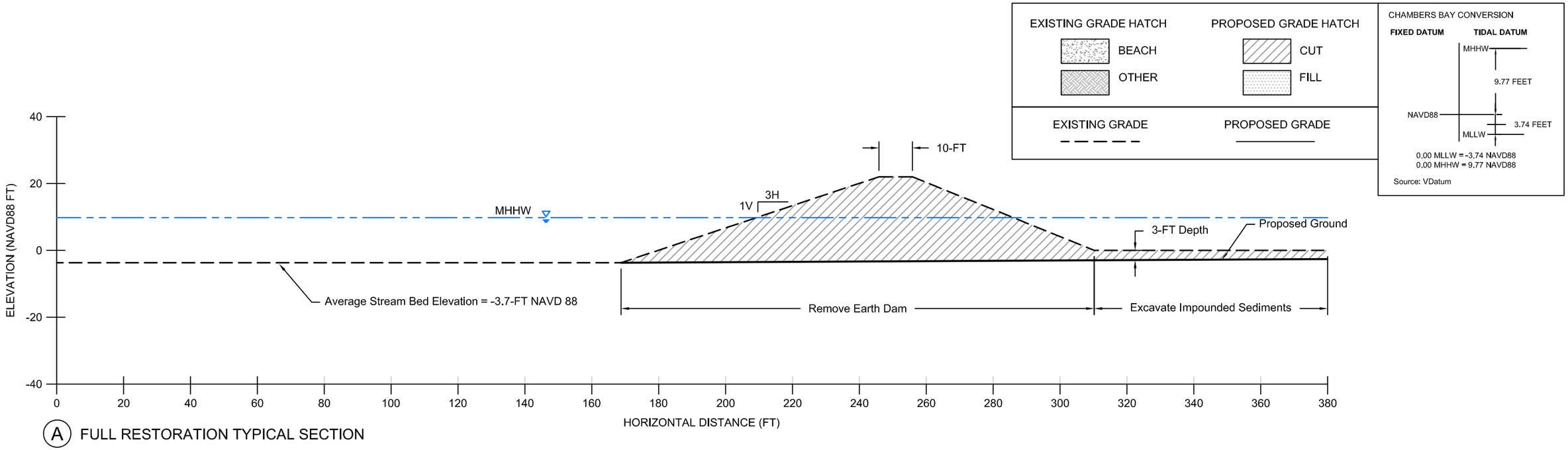

A FULL RESTORATION TYPICAL SECTION

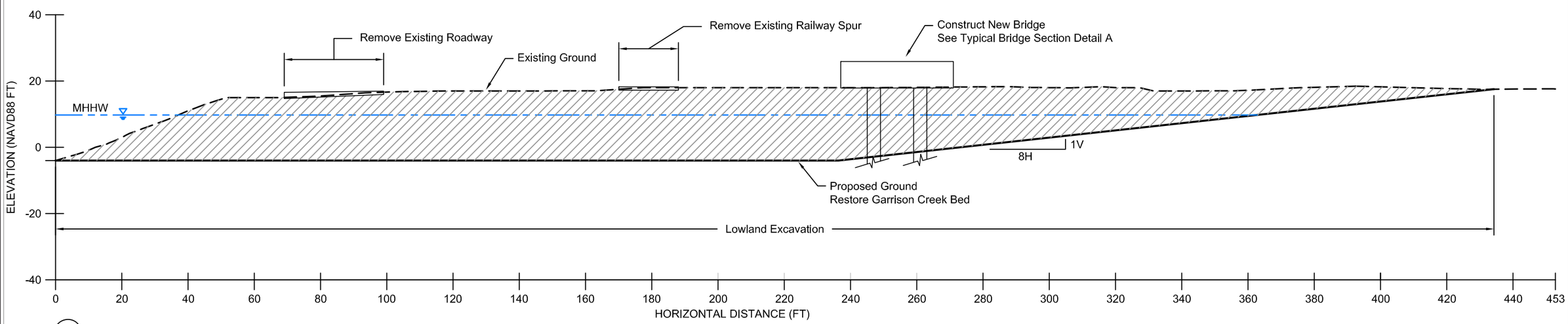

B FULL RESTORATION TYPICAL SECTION

0 30
Scale in Feet

PUGET SOUND NEARSHORE ECOSYSTEM RESTORATION PROJECT

Lead Contractor: ESA
Design Lead: Anchor with KPFF
Date: 3/2011

Puget Sound Nearshore Ecosystem Restoration Project (PSNERP) USACE Drawing File Number: D-1-1-64
WDFW Contract # 100-000204 (CAPS No. 10-1461)

Conceptual Design Section
SITE NAME: **Chambers Bay**
ACTION NAME: **Chambers Bay Estuarine and Riparian Enhancement**
PSNERP ID#: **1801**
Full Restoration

Figure 4-5

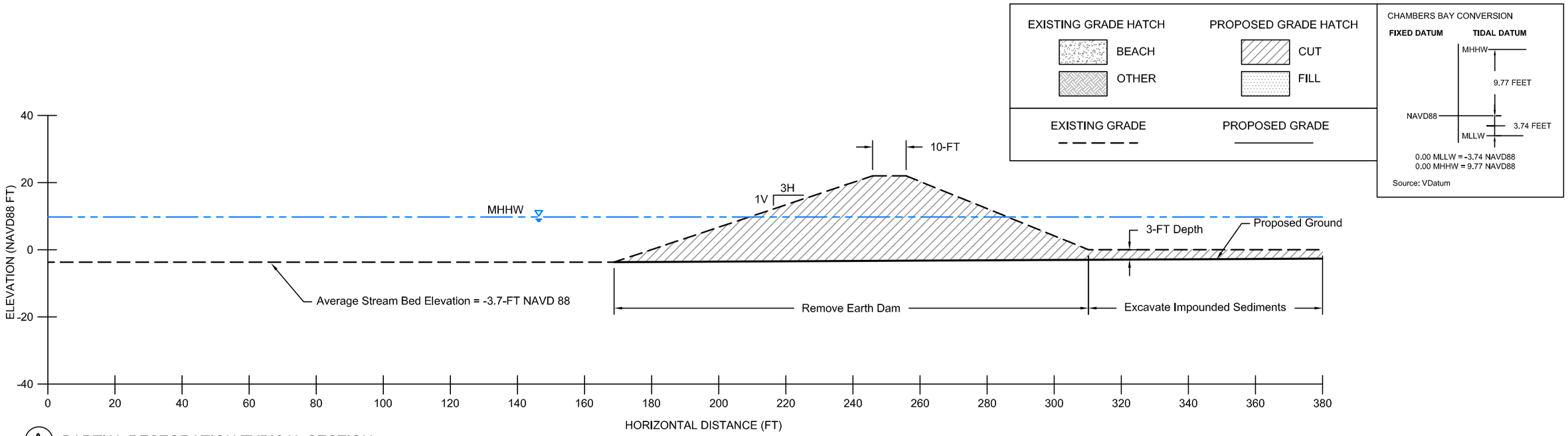

A PARTIAL RESTORATION TYPICAL SECTION

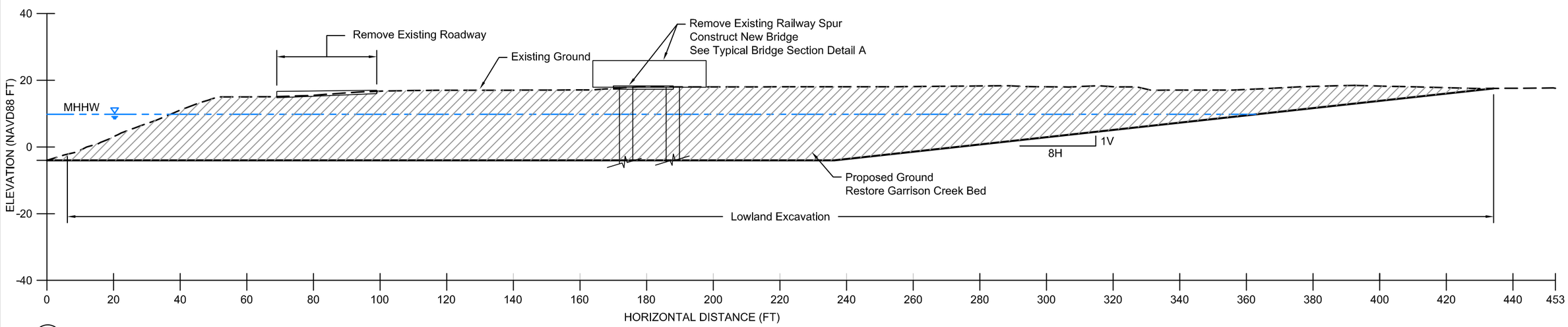

B PARTIAL RESTORATION TYPICAL SECTION

0 30
Scale in Feet

PUGET SOUND NEARSHORE ECOSYSTEM RESTORATION PROJECT

Lead Contractor: ESA
Design Lead: Anchor with KPFF
Date: 3/2011

Puget Sound Nearshore Ecosystem Restoration Project (PSNERP) USACE Drawing File Number: D-1-1-64
WDFW Contract # 100-000204 (CAPS No. 10-1461)
Conceptual Design Section
SITE NAME: **Chambers Bay**
ACTION NAME: **Chambers Bay Estuarine and Riparian Enhancement**
PSNERP ID#: **1801**
Partial Restoration

Figure 4-6

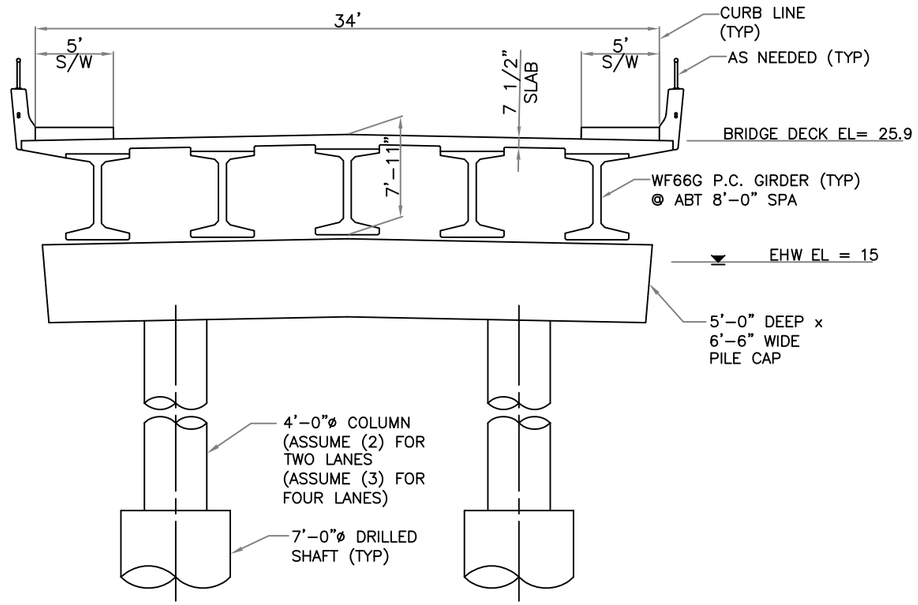

CONCRETE GIRDER BRIDGE (A)
NTS

NOTE: FULL AND PARTIAL RESTORATION
185' SPLAN (FULL) AND 113' SPAN (PARTIAL) RESTORATION
EXTREME HIGH WATER (EHW) = EL 15

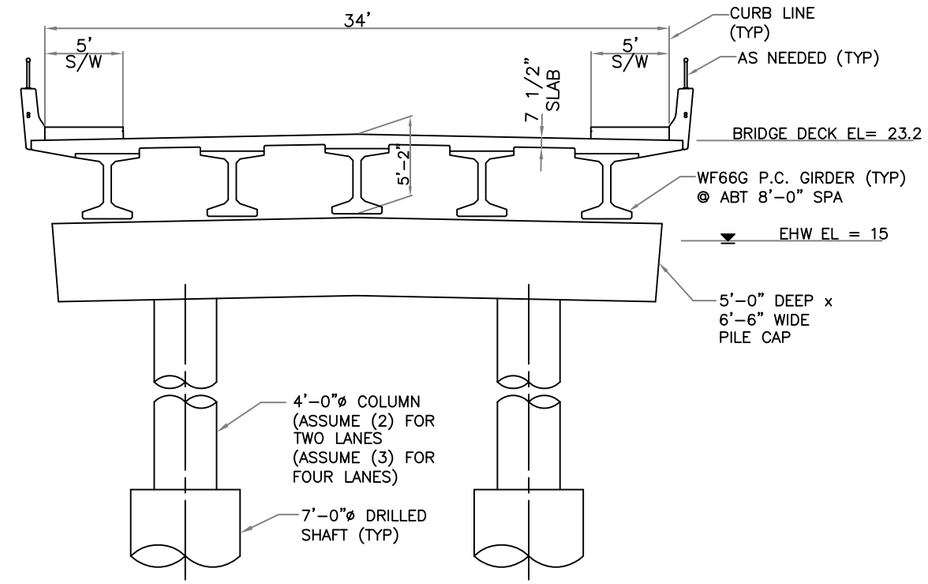

CONCRETE GIRDER BRIDGE (B)
NTS

NOTE: FULL AND PARTIAL RESTORATION
100' SPAN
EXTREME HIGH WATER (EHW) = EL 15

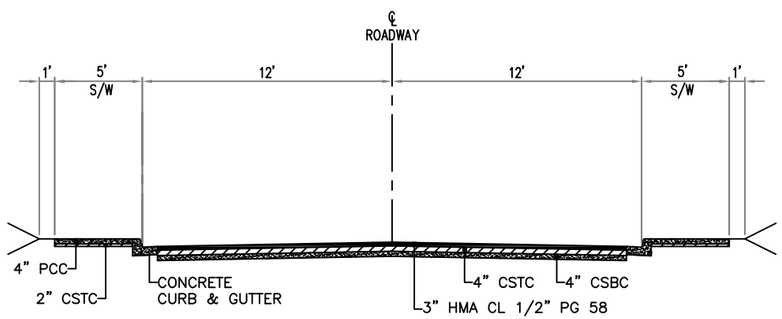

TYPICAL ROADWAY (C)
NTS

FULL AND PARTIAL RESTORATION
DESIGN SPEED = 35 MPH

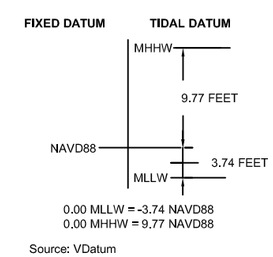

PUGET SOUND NEARSHORE ECOSYSTEM RESTORATION PROJECT

Lead Contractor: ESA
Design Lead: Anchor with KPFF
Date: 3/2011

Puget Sound Nearshore Ecosystem Restoration Project (PSNERP) USACE Drawing File Number: D-1-1-64
WDFW Contract # 100-000204 (CAPS No. 10-1461)
Conceptual Design Section
SITE NAME: **Chambers Bay**
ACTION NAME: **Chambers Bay Estuarine and Riparian Enhancement**
PSNERP ID#: **1801**
Full & Partial Restoration

Figure 4-7

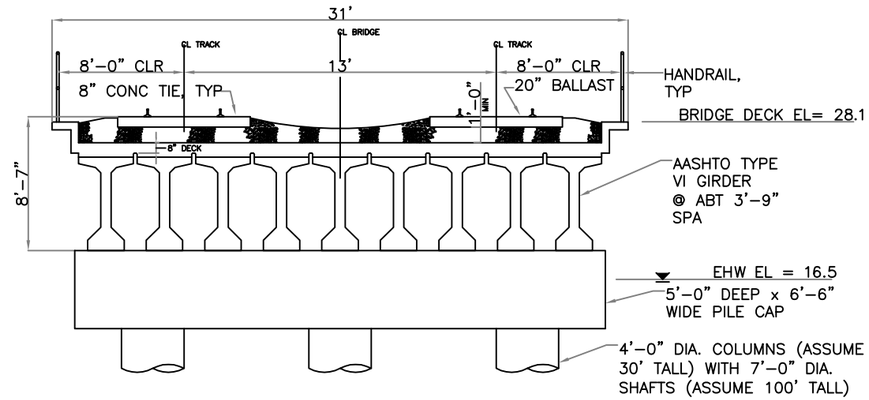

TRESTLE D
NTS

NOTE: FULL RESTORATION
80' SPAN
EXTREME HIGH WATER (EHW) = EL 16.5

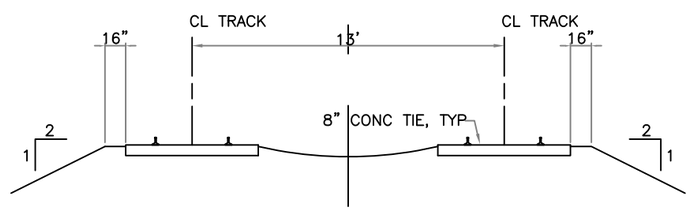

BALLASTED/FILL TRACK E
NTS

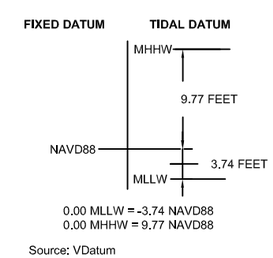

PUGET SOUND NEARSHORE ECOSYSTEM RESTORATION PROJECT

Lead Contractor: ESA
Design Lead: Anchor with KPFF
Date: 3/2011

Puget Sound Nearshore Ecosystem Restoration Project (PSNERP) USACE Drawing File Number: D-1-1-64
WDFW Contract # 100-000204 (CAPS No. 10-1461)
Conceptual Design Section
SITE NAME: **Chambers Bay**
ACTION NAME: **Chambers Bay Estuarine and Riparian Enhancement**
PSNERP ID#: **1801**
Full & Partial Restoration

Figure 4-8

Full Restoration Quantity Estimate

Action Name: Chambers Bay
Action #: 1801
Date: February 2011
By: J. Laplante

REMEDY: ***Remove Dam, abutments, appurtenant structures and impounded sediments. Replace Chambers Creek Road Bridge. Remove fill at mill site and daylight Garrison Springs Creek, with a new bridge crossing. Remove marina. Relocate lower Chambers Creek Road and remove shoreline armoring and bulkhead. Remove railroad causeway and replace with elevated trestle. Remove fill in tidal marsh and restore vegetation. Remove invasive vegetation on hillside north of Chambers Creek.***

Construction Period: Assume up to 9 years for land acquisition, design and permitting, 3 years for construction

Item	Unit of Measure	Material Name	Qty	Description of Item	Indicate section of design report where item is described
ACQUISITION AND CONSERVATION				Based on available mapping information	
Required Project Lands	Acre		43.5	Total land required For action	4.3.5
Proponent / Partner-owned lands	Acre		12.4	Etimate of lands currently owned by Proponent (i.e., Public lands)	4.3.5
Lands To Be Acquired	Acre		31.1	Estimate land required to be acquired for action prior to implementation	4.3.5
Material Sites				Not Used: See Earthwork - Imported Fill.	
MOBILIZATION AND ACCESS for construction activities				Description required for each item to facilitate cost estimating	
Mobilization - Typical (Equipment, Personnel, Planning, Financial)	LS		1	Mobilize earthwork equipment for excavation and demolition. Mobilize hydraulic dredge (or mechanical dredge on flexi-float barge system) for reservoir channel dredging. Mobilize pile driving euipment for new road bridges and new train trestle crossing	4.3.7
Mobilization - Remote (Equipment, Personnel, Planning, Financial)	LS		0		n/a
Site Access	LS		1	New bridge for Garrison Springs crossing. Mobilize equipment into Chambers Creek Reservoir - difficult access into reservoir.	4.3.7
Barge Access	Days		450	Barge access for bridge construction in Chambers Creek reservoir (180 days). Barge access for dam demolition (60 days). Barge access for BNSF trestle bridge construction (180 days). Barge access for marina overwater structure demolition (15 days); Barge access for marsh restoration excavation (15 days)	4.3.7
Temporary Traffic Control (one of the following)				Includes installation of traffic signals, signage, signmen, etc. There are 4 types as follows:	
none	LS		0	None = no traffic control	n/a
signs	LS		1	This action would require two types of traffic control. This particular item for construction signs exclusively is intended for the detour signage necessary during construction of the replacement bridge over Chambers Creek. Estimated duration of bridge construction is 6 months. Signs = signs only, costs typically around 1% of total roadway costs	not specifically discussed
flags / spotters	LS		1	Maintenance of traffic would require reducing traffic on Chambers Creek Road to a single lane in each direction at times. It is assumed that the work requiring this single lane closure would have a duraration of four months.	not specifically discussed
unique	LS		0	Unique = Greater effort than flags / spotters. Describe as basis for cost estimate.	n/a
Temporary Roadway	SF		0	Includes construction of temporary adjacent roadway or bypass roadways and for vehicle and pedestrian travel through or around site.	n/a
Control of Water	LS		2	(1) Bypass of dam during dam removal. Assume 3 month duration for water control installation and excavation (estimated 6,200 cy). If the dam does not have a low-flow bypass already, bypass to be accomplished after demolition of fish hatchery building and constructing a lined channel or pipeline through the north abutment. Dam to be isolated by sheet piles or similar water control structure during removal. (2) Bypass of Garrison Springs creek during excavation for daylighting. Assume 4 month duration for excavation work (500 cy/day, 22 days/month); Flow rate TBD during detailed design	not specifically discussed
Relocation Activities				Not Used: See Utilities, Structures	
Site Demolition Activities				Demolition and removal of structures (description required), temporary features and relocations, itemized separately); Clearing and grubbing of vegetation, and removal of minor debris (rocks, slabs) - description required.	
Clearing and Grubbing (one or more of following)				Use one or more of the following categories of clearing and grubbing	
Clear Vegetation - Local Disposal	AC		3.4	3.4 acres for roadwork (KPFF).	4.3.3
Clear /Grub Vegetation - Local Disposal	AC		0	Vegetation roots also removed and disposed locally	n/a
Clear /Grub Vegetation - Offsite Disposal	AC		8.4	8.4 acres of clearning and grubbing invasives for riparian planting north of Chambers Creek. Steep hillside work.	4.3.3
Clear, stockpile - large woody debris	CY		0	Vegetation is segregated and stockpiled / prepared for reuse on site.	n/a
Hydraulic Structures - Small	LS		1	Remove water intake structure upstream of Chambers Creek Reservoir dam	not specifically discussed
Hydraulic Structures - Large	LS		1	Remove Chambers Creek Reservoir Dam. Dam is 22 feet high with 100 foot wide spillway. Earthen construction. Dam appurtenances include 400 LF of steel sheet pile for demolition (fish ladders). Water control and sediment removal estimated separately.	4.3.2
Utilities	LF		14,340	4680 feet of water; 4680 feet of sanitary force main; 4680 feet of overhead power; 300 feet of gas line	4.3.6
Buildings	SF		54,000	7,300 square feet of buildings at dam abutments (fish hatchery, support building, and water intake building), 46,700 square feet of buildings at the marina	4.3.2
Pavement	SF		494,160	Includes 140,160 SF removal of pavement along Chambers Creek Rd, and 354,000 SF of pavement removal at former mill site	not specifically discussed
Bulkheads	LF		525	Remove wooden bulkhead along Chambers Creek Road. Assumed 10 feet high above mudline. Wood lagging between wood pile vertical supports.	4.3.6
Rock revetments	LF, Ton or CY		0		n/a
Large Coastal Structures	CY		68,000	Removal of rail causeway, not including armor. Assumed 25-foot wide crest, 21 feet high, 2:1 side slopes and 1300 foot length	4.3.2
Demolition / Removal - Bridge	SF		12,600	3,200 SF for Chambers Creek Road Bridge; 9,400 SF for Rail Trestle drawbridge	4.3.7
Demolition / Removal - Floating Docks	SF		77,100	Removal of floating docks and floating covered structures at Marina. Assumes water-based demolition operation	4.3.2
Removal - Misc. (e.g. angular rock from beach)	Ton		10,600	1 acre at causeway; 0.2 acres at marina, 0.2 acres at Chambers Creek Road bulkhead 0.7 acres at mill site; Assume average thickness of 2 feet, and conversion of 1.6 tons/cy. For loose rock scattered across intertidal.	4.3.2
Demolition / Removal - Boat Ramp	SF		0	This is a special item but happens at least once…others can also be added as needed.	n/a
Demolition / Removal - Rail	LF		3,000	Removal of abandoned BNSF rail spur from main line into former mill site	4.3.7
Demolition / Removal - Pile pulling	EA		150	Allowance based on review of aerial obliques. Area upstream of marina. Includes disposal. Assume creosote piles, all located within 100 feet of shoreline	4.3.3
Demolition / Removal - Miscellaneous Debris	Ton		100	Allowance. Actual volume to be assessed during detailed design.	4.3.3
Haul - Offsite Disposal of Demolition Debris	Miles		20	Estimate distance (to nearest 10 miles) to disposal site for materials, veg clear and grub, etc.	4.3.3
Hazardous/Contaminated Waste Removal				These items for earthwork of quality not compatible with wetlands, requiring special handling and disposal. Describe basis for classification as contaminated or hazardous. State known or suspected contamination, describe known similar work.	
Contaminated Earthwork	CY		5,500	Assume 2,000 cy at mill site (approximately 1% of excavated volume) and 3,500 cy of sediment from the impounded dam (50% of excavated sediment). Excavation, off haul and disposal within a licensed landfill, complete	4.3.3
Hazardous Earthwork	CY		0	Excavation, off haul and disposal within a licensed hazardous waste landfill, complete	n/a
Construct Temporary Features				Use as needed for unusual temporary features not included elsewhere (see TESC below)	
EARTHWORK				Expand to include equipment, etc. to facilitate cost estimating.	
Excavation				Per yard excavation w/out expected haul	
Excavation - Upland	CY		247,000	Excavation of fill at former mill site, and along Chambers Creek roadway corridor south of mill site. Mill site area = 354,000 square feet & avg. elevation 18' NAVD88; assume 1/2 of the area would be a full depth excavation, and 1/2 of the area would be a sloped excavation. Full depth excavation to elevation -4' NAVD88, with a 2-foot overexcavation allowance (24-foot thick cut). For Chambers Creek Road corridor, 27,000 sq.ft. excavation from existing avg. elevation 14' NAVD88 to current mudline at bulkhead/toe of slope of 5' NAVD88, with 2-foot overexcavation allowance. 236,000 cy at mill site, and 11,000 cy in Chambers Creek Road corridor	4.3.2
Excavation - Lowland	CY		46,600	Excavation of fill on sand spit at marina. Does not include excavation of causeway fill. Excavation of causeway fill covered under Large Coastal Structures demolition. Average marina elevation 16 feet NAVD88. Assume final average grade +11 (5 foot cut) and include allowance for 2 feet of overexcavation (total 7 foot cut); 179,700 square feet	4.3.2
Dredging - Bucket - Land	CY		90,100	Excavation of fill at dam abutments, and Chambers Creek Bridge abutments. Excavation would start as upland,and relatively unconstrained but would be largely performed and completed below the water surface, in the tidally influenced environment in front of the dam, and in the reservoir behind the dam. North dam abutment = 65,750 square feet & avg. elevation 18' NAVD88. South Dam abutment = 29,000 square feet & avg. elvation 16' NAVD88. Chambers Creek Bridge abutment = 9,000 square feet & avg. elevation 18' NAVD88. Assume base of excavation -4' NAVD888, with 2 foot overex/overdredge allowance (to elevation -6'	4.3.2
Dredging - Bucket - Marine	CY		6,500	Excavate 2 feet of material to restore marsh north of marina. Assume marine-based operation. Include allowance for 2 feet of overdredge (total 4 foot thick cut); 43,900 square feet	4.3.2
Dredging - Hydraulic	CY		7,300	Excavate channels into impounded sediments. Assume hydraulic dredge due to site access. 39,200 square feet of excavation. Assume 3 foot deep channel, and 2 foot allowable overdredge (5 foot thick total cut); Includes costs for dewatering dredged sediment	4.3.2
Fine Grading	AC		12.2	8.1 acres in the mill site; 4.1 acres in the marina area	4.3.2
Fill Placement - local borrow				This is additive to Earthwork -Excavation	
Side cast	CY		0	Excavated material placed within reach of excavator / dredge - assume includes some shaping by bucket	n/a
Haul - uncontrolled placement	CY		465,500	Sum of all stockpiled material. Assume 20-mile haul. Transportation and second handling - estimate distance.	4.3.2
Haul, place, compact	CY		0	Transportation and second handling - estimate distance, placement in lifts, moisture conditioning, compaction testing.	n/a
Stockpile - uncontrolled placement	CY		293,600	Sum of all excavation volumes. Assume material would not need to be dried, but might need to be stockpiled prior to load out and shipping.	4.3.2
Stockpile - controlled placement	CY		171,900	Sum of all dredge volumes plus BNSF causeway fill. Assume stockpile needed for drying and/or sorting prior to offsite shipment. intermediate step, for subsequent off haul or use elsewhere on site. Can use this for drying material for subsequent controlled compacted fill	4.3.2
Conveyor placement from stockpile land/water	CY		0	Some projects may require conveyor placement	n/a
Imported Fill				Includes purchase, delivery and placement or as noted / described	
Select Fill	CY		0	Imported select material - describe use, e.g. levee, root base mix, etc;	n/a
Gravel Borrow, including haul	CY		35,900	Substrate modification in the excavated dam abutments, mill site area, and chambers creek road area. Include purchase, delivery and placement. Assume 2-foot thick layer of material placed. Dam abutments = 103,750 sq.ft. (2.4 acres). Mill Site = 354,000 sq.ft. (8.1 acres). Chambers Creek Road = 27,000 sq.ft. (0.6 acres).	4.3.3
Sand / Gravel for Beach Nourishment	CY		13,300	Beach restoration in the sand spit area following marina removal. Assumed 2 feet thick over 179,700 square feet. Material source to be identified during detailed design. Include purchase, transport and placement. special borrow and sorting required; identify material source	4.3.3
Cobble for Shore Nourishment	CY		1000	Assume this would be a buried armor layer of 1-foot thick over the 0.6 acre Chambers Creek Road offset area. Include purchase, delivery and placement. Source to be identified during detailed design. special borrow and sorting required; identify material source	4.3.2
Embankment Compaction	CY		0	WSDOT standard item	n/a
Topsoil	CY		3,200	Allowance for 2 acres of topsoil to be used in restoration areas at Mill Site. Assume depth of 1 foot of topsoil.	4.3.3

Full Restoration Quantity Estimate

Action Name: Chambers Bay
Action #: 1801
Date: February 2011
By: J. Laplante

REMEDY: ***Remove Dam, abutments, appurtenant structures and impounded sediments. Replace Chambers Creek Road Bridge. Remove fill at mill site and daylight Garrison Springs Creek, with a new bridge crossing. Remove marina. Relocate lower Chambers Creek Road and remove shoreline armoring and bulkhead. Remove railroad causeway and replace with elevated trestle. Remove fill in tidal marsh and restore vegetation. Remove invasive vegetation on hillside north of Chambers Creek.***

Construction Period: Assume up to 9 years for land acquisition, design and permitting, 3 years for construction

Item	Unit of Measure	Material Name	Qty	Description of Item	Indicate section of design report where item is described
RESTORATION Features					
Channel Rehab / Creation	SF		0	Channel construction (SF) including imported sediment and habitat materials, excluding excavation	n/a
Large Wood Placement	EA		0	Per each log, Including drift logs, lower river log jams, etc.	n/a
Invasive Species Control	Acre		8.4	Same area as counted under clear and grub - offsite disposal, for the riparian restoration north of Chambers Creek. Due to heavy blackberry, this item would include spot spray of Rodeo or similar to control invasives following the clear and grub	4.3.3
Physical Exclusion Devices	LF or EA		0	Human or wildlife exclusions including fences, barriers, mooring buoys, etc	n/a
Other Restoration Features/ Activities	LS		0	Describe	n/a
Structures	EA			KPFF to provide additional inputs	
Water Control Structures - Culverts with Gates	EA		0	Describe type, number of openings (e.g. pipes), expected materials, dimensions	n/a
Water Control Structures - Weirs	EA		0	Describe, length, type, anticipated materials	n/a
Rock Slope Protection	LF		0	Describe slope, rock size, layering, use of fabric, back up quantities per foot.	n/a
Other	EA		0	Describe	n/a
Elevated Boat Ramp	SF		0	Pile or pier supported to allow sediment drift	n/a
Fencing	SF		0	Describe, type, height etc.	n/a
Roadway Bulkhead	LS		1	Allowance for potential sheet pile wall needed for setback Chambers Creek Road. Assume 525 LF of wall would need to be replaced with the road setback. Replacement would occur in the area of the existing wall, however because of the ability to set back the road, the new wall would be approximately 5 feet high from the road surface to the mudline in the creek.	
Utilities				Replacement or relocation. Designer to provide size and material and have separate line item for each run. Incidentals include earthwork, testing, hook up fees, etc. These quantities do not include demolition of existing utilities, real estate / easements, design fees. Describe the owner if known, and whether utility franchise will install (e.g., electric is typically installed by electrical franchise).	
Water	LF		4,680	Size unknown	4.3.6
Gas	LF		300	High pressure, size unknown	4.3.6
Electric	LF		4,680	Overhead Transmission	4.3.6
Sewer	LF		4,680	Force main, unknown size.	4.3.6
Telecommunications	LF		0		n/a
Other	LF		0	Others = whatever is required (e.g.. power towers, petroleum, jet fuel, etc.)	n/a
Roadway / Railway				KPFF expected to participate in these estimates	
Roadway (2 at 12-ft wide lanes; 5-ft wide sidewalks)	SF		164,412	Two-way two-lane roadway with 5-ft sidewalks. Refer to Plans for pavement section	4.3.6
Roadway - Traffic Signal	LS		0	Street lights, etc. (Temporary traffic control handled under Temporary Facilities)	n/a
Culvert (type)	LF		30	Concrete box culvert for crossing Unnamed Creek. Span to be determied during detailed design	not specifically discussed
Culvert - Jacking	LF		0	Through railway	n/a
Culvert - Horizontal Pile Driving	LF		0	Through railway	n/a
Bridge 1 - Superstructure	SF		11,470	370-lf roadway 7'-11" girder. Bridge crossing daylighted Garrison Springs creek Includes elements such as approach slab, abutment, barriers, and railings.	4.3.6
Bridge 2 - Superstructure	SF		6,200	200-lf roadway 5'-2" girder. New bridge crossing at the former Chambers Creek Reservoir Includes elements such as approach slab, abutment, barriers, and railings.	4.3.6
Bridge 1 - Foundation	LF		32	Drilled shaft foundation; depth 100-ft	4.3.6
Bridge 2 - Foundation	LF		32	Drilled shaft foundation; depth 100-ft	4.3.6
Rail	LF		5,850	Double track, mainline	4.3.6
Railway - Box Girder	SF		46,066	Prestressed box girder bridge, 1486 lf in length	4.3.6
Railway - Foundation	LF		589	Prestressed box girder bridge, 1486 lf in length	4.3.6
Railway - Shoe fly	LF		0	Temporary alignment	n/a
Permanent Access Features				KPFF expected to participate in these estimates	
Roads	Level		0%	Level 1 direct access, Level 2 moderately difficult, Level 3 difficult access	n/a
Utility Access Routes	varies		0	Describe utility access feature, such as boardwalk or all-weather gravel road	n/a
Erosion Control Features	L.F.		0	Describe quantity of expected erosion control measures	n/a
Public Access or Recreation Features				KPFF expected to participate in these estimates	
Trails	SF		0	Describe trail feature, such as gravel, mulch, asphalt concrete.	n/a
Bridges	SF		0	Describe bridge feature, such as wooden pedestrian, or H20 vehicle.	n/a
Kiosk	EA		0	Describe kiosk feature, such as size, material.	n/a
Restrooms	EA		0	Describe restroom feature, such as size, material.	n/a
Interpretive Signs	EA		2	Include # interpretive signs based on number of local public access points	not specifically discussed
Parking Area	SF		0	Describe parking area, such as size, material.	n/a
Other	EA		0	Describe other recreational features (see Corps criteria, ER 1105-2-100 for compatibility with ecosystem objectives)	n/a
Vegetation & Erosion Control					
Hydroseeding	AC		0	Describe desired seed mix (e.g.. native plants cost more)	n/a
Planting	AC		16.1	8.4 acres for banks on the north side of Chambers Creek. 6.7 acres for the corridor along the restored Garrison Springs creek and the area within the former mill site footprint); 1 acre for the tidal wetland on the north side of Chambers Creek by the marina.	4.3.3
Vegetation Maintenance	AC-YR		15.1	All areas described under planting (above), with the exception that active maintenance would not be performed in the 1-acre tidal wetland due to limited access.	4.3.3
Erosion / sediment BMPs - Temp.	AC		10	Typical BMPs used for this project may include stabilized construction entrances, sediment ponds or settlement tanks, hydroseed or mulch to stabilize roadway embankments, and silt fence.	not specifically discussed
Erosion / sediment BMPs - Permanent	AC		8.4	Erosion control for north bank of Chambers Creek prior to establishment of native vegetation plantings. Erosion control measures sufficient for 60 to 100 percent slopes in this area. Measures to be determined during detailed design.	not specifically discussed
Waterside controls - Temporary	LF		1,000	Allowance for 1000 LF of silt curtain during excavation of dam abutment soils, to control release of turbidity downstream	not specifically discussed
Construction Management					
Construction oversight	weeks		200	Assume 2 years for overwater work; 1 year for earthwork; 1 year for finish work. Needs to be evaluated in more detail during design development	4.3.7
Materials testing				Included in cost of material - no separate quantity	n/a
Design and Detailed Site Investigations					
Survey & Property, Utility Research	LS		1	% of construction cost	4.8
35% Design	LS		1	% of construction cost	n/a
65% design	LS		1	% of construction cost	n/a
90% design	LS		1	% of construction cost	n/a
100% design	LS		1	% of construction cost	n/a
Geotechnical Studies				Refer to design report for description of need	4.8
Cultural Studies				Refer to design report for description of need	4.8
HTWR Studies				Refer to design report for description of need	4.8
Project Agreement Activities				Unable to provide credibale estimate at 10% design	
Site-Specific Adaptive Management Features & Activities				List if known	
Monitoring Activities				Assume 5 crew-days/year for each monitoring parameter in design report for 5 yrs	
Monitoring (Type_)	crew-days		200		4.7
Operations & Maintenance				Unable to provide credible estimate at 10% design	

Partial Restoration Quantity Estimate

Action Name: Chambers Bay
Action #: 1801
Date: February 2011
By: J. Laplante

REMEDY: ***Remove Dam, abutments, appurtenant structures and impounded sediments. Replace Chambers Creek Road Bridge. Partially remove fill at mill site and daylight Garrison Springs Creek, with a new bridge crossing. Relocate lower Chambers Creek Road and remove shoreline armoring. Remove fill in tidal marsh and restore vegetation. Remove invasive vegetation on hillside north of Chambers Creek.***

Construction Period: Assume up to 5 years for land acquisition, design and permitting, 3 years for construction

Item	Unit of Measure	Material Name	Qty	Description of Item	Indicate section of design report where item is described
ACQUISITION AND CONSERVATION				Based on available mapping information	
Required Project Lands	Acre		21.4	Total land required For action	4.3.5
Proponent / Partner-owned lands	Acre		11.9	Etimate of lands currently owned by Proponent (i.e., Public lands)	4.3.5
Lands To Be Acquired	Acre		9.5	Estimate land required to be acquired for action prior to implementation	4.3.5
Material Sites				Not Used: See Earthwork - Imported Fill.	
MOBILIZATION AND ACCESS for construction activities				Description required for each item to facilitate cost estimating	
Mobilization - Typical (Equipment, Personnel, Planning, Financial)	LS		1	Mobilize earthwork equipment for excavation and demolition. Mobilize hydraulic dredge (or mechanical dredge on flexi-float barge system) for reservoir channel dredging. Mobilize pile driving euipment for new road bridges and new train trestle crossing	4.3.7
Mobilization - Remote (Equipment, Personnel, Planning, Financial)	LS		0		n/a
Site Access	LS		1	New bridge for Garrison Springs crossing. Mobilize equipment into Chambers Creek Reservoir - difficult access into reservoir.	4.3.7
Barge Access	Days		255	Barge access for bridge construction in Chambers Creek reservoir (180 days). Barge access for dam demolition (60 days). Barge access for marsh restoration excavation (15 days)	4.3.7
Temporary Traffic Control (one of the following)				Includes installation of traffic signals, signage, signmen, etc. There are 4 types as follows:	
none	LS		0	None = no traffic control	n/a
signs	LS		1	This action would require two types of traffic control. This particular item for construction signs exclusively is intended for the detour signage necessary during construction of the replacement bridge over Chambers Creek. Estimated duration of bridge construction is 6 months. Signs = signs only, costs typically around 1% of total roadway costs	not specifically discussed
flags / spotters	LS		1	Maintenance of traffic would require reducing traffic on Chambers Creek Road to a single lane in each direction at times. It is assumed that the work requiring this single lane closure would have a duraration of four months.	not specifically discussed
unique	LS		0	Unique = Greater effort than flags / spotters. Describe as basis for cost estimate.	n/a
Temporary Roadway	SF		0	Includes construction of temporary adjacent roadway or bypass roadways and for vehicle and pedestrian travel through or around site.	n/a
Control of Water	LS		2	(1) Bypass of dam during dam removal. Assume 3 month duration for water control installation and excavation (estimated 6,200 cy). If the dam does not have a low-flow bypass already, bypass to be accomplished after demolition of fish hatchery building and constructing a lined channel or pipeline through the north abutment. Dam to be isolated by sheet piles or similar water control structure during removal. (2) Bypass of Garrison Springs creek during excavation for daylighting. Assume 4 month duration for excavation work (500 cy/day, 22 days/month); Flow rate TBD during detailed design	not specifically discussed
Relocation Activities				Not Used: See Utilities, Structures	
Site Demolition Activities				Demolition and removal of structures (description required), temporary features and relocations, itemized separately); Clearing and grubbing of vegetation, and removal of minor debris (rocks, slabs) - description required.	
Clearing and Grubbing (one or more of following)				Use one or more of the following categories of clearing and grubbing	
Clear Vegetation - Local Disposal	AC		1.6	1.6 acres for roadwork (KPFF).	4.3.3
Clear /Grub Vegetation - Local Disposal	AC		0	Vegetation roots also removed and disposed locally	n/a
Clear /Grub Vegetation - Offsite Disposal	AC		8.4	8.4 acres of clearning and grubbing invasives for riparian planting north of Chambers Creek. Steep hillside work.	4.3.3
Clear, stockpile - large woody debris	CY		0	Vegetation is segregated and stockpiled / prepared for reuse on site.	n/a
Hydraulic Structures - Small	LS		1	Remove water intake structure upstream of Chambers Creek Reservoir dam	not specifically discussed
Hydraulic Structures - Large	LS		1	Remove Chambers Creek Reservoir Dam. Dam is 22 feet high with 100 foot wide spillway. Earthen construction. Dam appurtenances include 400 LF of steel sheet pile for demolition (fish ladders). Water control and sediment removal estimated separately.	4.3.2
Utilities	LF		7,020	2240 feet of water; 2240 feet of sanitary force main; 2240 feet of overhead power; 300 feet of gas line	4.3.6
Buildings	SF		54,000	7,300 square feet of buildings at dam abutments (fish hatchery, support building, and water intake building), 46,700 square feet of buildings at the marina	4.3.2
Pavement	SF		330,580	Includes 62,080 SF removal of pavement along Chambers Creek Rd, and 268,500 SF of pavement removal at former mill site	not specifically discussed
Bulkheads	LF		0	None	4.3.6
Rock revetments	LF, Ton or CY		0		n/a
Large Coastal Structures	CY		0	None	n/a
Demolition / Removal - Bridge	SF		3,200	3,200 SF for Chambers Creek Road Bridge	4.3.7
Demolition / Removal - Floating Docks	SF		0	None	n/a
Removal - Misc. (e.g. angular rock from beach)	Ton		3,400	0.7 acres at mill site; Assume average thickness of 2 feet, and conversion of 1.6 tons/cy. For loose rock scattered across intertidal.	4.3.2
Demolition / Removal - Boat Ramp	SF		0	This is a special item but happens at least once…others can also be added as needed.	n/a
Demolition / Removal - Rail	LF		3,000	Removal of abandoned BNSF rail spur from main line into former mill site	4.3.7
Demolition / Removal - Pile pulling	EA		150	Allowance based on review of aerial obliques. Area upstream of marina. Includes disposal. Assume creosote piles, all located within 100 feet of shoreline	4.3.3
Demolition / Removal - Miscellaneous Debris	Ton		100	Allowance. Actual volume to be assessed during detailed design.	4.3.3
Haul - Offsite Disposal of Demolition Debris	Miles		20	Estimate distance (to nearest 10 miles) to disposal site for materials, veg clear and grub, etc.	4.3.3
Hazardous/Contaminated Waste Removal				These items for earthwork of quality not compatible with wetlands, requiring special handling and disposal. Describe basis for classification as contaminated or hazardous. State known or suspected contamination, describe known similar work.	
Contaminated Earthwork	CY		4,900	Assume 1,400 cy at mill site (approximately 1% of excavated volume) and 3,500 cy of sediment from the impounded dam (50% of excavated sediment). Excavation, off haul and disposal within a licensed landfill, complete	4.3.3
Hazardous Earthwork	CY		0	Excavation, off haul and disposal within a licensed hazardous waste landfill, complete	n/a
Construct Temporary Features				Use as needed for unusual temporary features not included elsewhere (see TESC below)	
EARTHWORK				Expand to include equipment, etc. to facilitate cost estimating.	
Excavation	CY			Per yard excavation w/out expected haul	
Excavation - Upland	CY		147,900	Excavation of fill at former mill site, and along Chambers Creek roadway corridor south of mill site. Mill site area = 268,500 square feet & avg. elevation 18' NAVD88; assume 56,000 sq.ft. would be a full depth excavation, and balance of the area would be a sloped excavation. Full depth excavation to elevation -4' NAVD88, with a 2-foot overexcavation allowance (24-foot thick cut). For Chambers Creek Road corridor, 18,000 sq.ft. sloped excavation from existing avg. elevation 14' NAVD88 to current mudline toe of slope of 5' NAVD88, with 2-foot overexcavation allowance. 144,200 cy at mill site, and 3,700 cy in Chambers Creek Road corridor	4.3.2
Excavation - Lowland	CY		0	None	n/a
Dredging - Bucket - Land	CY		90,100	Excavation of fill at dam abutments, and Chambers Creek Bridge abutments. Excavation would start as upland,and relatively unconstrained but would be largely performed and completed below the water surface, in the tidally influenced environment in front of the dam, and in the reservoir behind the dam. North dam abutment = 65,750 square feet & avg. elevation 18' NAVD88. South Dam abutment = 29,000 square feet & avg. elvation 16' NAVD88. Chambers Creek Bridge abutment = 9,000 square feet & avg. elevation 18' NAVD88. Assume base of excavation -4' NAVD888, with 2 foot overex/overdredge allowance (to elevation -6' NAVD88)	4.3.2
Dredging - Bucket - Marine	CY		6,500	Excavate 2 feet of material to restore marsh north of marina. Assume marine-based operation. Include allowance for 2 feet of overdredge (total 4 foot thick cut); 43,900 square feet	4.3.2
Dredging - Hydraulic	CY		7,300	Excavate channels into impounded sediments. Assume hydraulic dredge due to site access. 39,200 square feet of excavation. Assume 3 foot deep channel, and 2 foot allowable overdredge (5 foot thick total cut); Includes costs for dewatering dredged sediment	4.3.2
Fine Grading	AC		6.2	6.2 acres in the mill site	4.3.2
Fill Placement - local borrow				This is additive to Earthwork -Excavation	
Side cast	CY		0	Excavated material placed within reach of excavator / dredge - assume includes some shaping by bucket	n/a
Haul - uncontrolled placement	CY		251,800	Sum of all stockpiled material. Assume 20-mile haul. Transportation and second handling - estimate distance.	4.3.2
Haul, place, compact	CY		0	Transportation and second handling - estimate distance, placement in lifts, moisture conditioning, compaction testing.	n/a
Stockpile - uncontrolled placement	CY		147,900	Sum of all excavation volumes. Assume material would not need to be dried, but might need to be stockpiled prior to load out and shipping.	4.3.2
Stockpile - controlled placement	CY		103,900	Sum of all dredge volumes plus BNSF causeway fill. Assume stockpile needed for drying and/or sorting prior to offsite shipment. intermediate step, for subsequent off haul or use elsewhere on site. Can use this for drying material for subsequent controlled compacted fill	4.3.2
Conveyor placement from stockpile land/water	CY		0	Some projects may require conveyor placement	n/a
Imported Fill				Includes purchase, delivery and placement or as noted / described	
Select Fill	CY		0	Imported select material - describe use, e.g. levee, root base mix, etc;	n/a
Gravel Borrow, including haul	CY		28,900	Substrate modification in the excavated dam abutments, mill site area, and chambers creek road area. Include purchase, delivery and placement. Assume 2-foot thick layer of material placed. Dam abutments = 103,750 sq.ft. (2.4 acres). Mill Site = 268,500 sq.ft. (6.2 acres). Chambers Creek Road = 18,000 sq.ft. (0.4 acres).	4.3.3
Sand / Gravel for Beach Nourishment	CY		0	None	4.3.3
Cobble for Shore Nourishment	CY		700	Assume this would be a buried armor layer of 1-foot thick over the 0.4 acre Chambers Creek Road offset area. Include purchase, delivery and placement. Source to be identified during detailed design. special borrow and sorting required; identify material source	4.3.2
Embankment Compaction	CY		0	WSDOT standard item	n/a
Topsoil	CY		800	Allowance for 0.5 acres of topsoil to be used in restoration areas at Mill Site. Assume depth of 1 foot of topsoil.	4.3.3
RESTORATION Features					
Channel Rehab / Creation	SF		0	Channel construction (SF) including imported sediment and habitat materials, excluding excavation	
Large Wood Placement	EA		0	Per each log, Including drift logs, lower river log jams, etc.	n/a
Invasive Species Control	Acre		8.4	Same area as counted under clear and grub - offsite disposal, for the riparian restoration north of Chambers Creek. Due to heavy blackberry, this item would include spot spray of Rodeo or similar to control invasives following the clear and grub	4.3.3

Partial Restoration Quantity Estimate

Action Name: Chambers Bay
Action #: 1801
Date: February 2011
By: J. Laplante

REMEDY: ***Remove Dam, abutments, appurtenant structures and impounded sediments. Replace Chambers Creek Road Bridge. Partially remove fill at mill site and daylight Garrison Springs Creek, with a new bridge crossing. Relocate lower Chambers Creek Road and remove shoreline armoring. Remove fill in tidal marsh and restore vegetation. Remove invasive vegetation on hillside north of Chambers Creek.***

Construction Period: Assume up to 5 years for land acquisition, design and permitting, 3 years for construction

Item	Unit of Measure	Material Name	Qty	Description of Item	Indicate section of design report where item is described
Physical Exclusion Devices	LF or EA		0	Human or wildlife exclusions including fences, barriers, mooring buoys, etc	n/a
Other Restoration Features/ Activities	LS		0	Describe	n/a
Structures	EA			KPFF to provide additional inputs	n/a
Water Control Structures - Culverts with Gates	EA		0	Describe type, number of openings (e.g. pipes), expected materials, dimensions	
Water Control Structures - Weirs	EA		0	Describe, length, type, anticipated materials	n/a
Rock Slope Protection	LF		0	Describe slope, rock size, layering, use of fabric, back up quantities per foot.	n/a
Other	EA		0	Describe	n/a
Elevated Boat Ramp	SF		0	Pile or pier supported to allow sediment drift	n/a
Fencing	SF		0	Describe, type, height etc.	n/a
Roadway Bulkhead	LS		0	None	n/a
Utilities				Replacement or relocation. Designer to provide size and material and have separate line item for each run. Incidentals include earthwork, testing, hook up fees, etc. These quantities do not include demolition of existing utilities, real estate / easements, design fees. Describe the owner if known, and whether utility franchise will install. (e.g., electric is typically installed by electrical franchise).	
Water	LF		2,240	Size unknown	4.3.6
Gas	LF		300	High pressure, size unknown	4.3.6
Electric	LF		2,240	Overhead Transmission	4.3.6
Sewer	LF		2,240	Force main, unknown size.	4.3.6
Telecommunications	LF		0		n/a
Other	LF		0	Others = whatever is required (e.g.. power towers, petroleum, jet fuel, etc.)	n/a
Roadway / Railway				KPFF expected to participate in these estimates	
Roadway (2 at 12-ft wide lanes; 5-ft wide sidewalks)	SF		105,192	Two-way two-lane roadway with 5-ft sidewalks. Refer to Plans for pavement section	4.3.6
Roadway - Traffic Signal	LS		0	Street lights, etc. (Temporary traffic control handled under Temporary Facilities)	n/a
Culvert (type)	LF		30	24" RCP culvert for crossing Unnamed Creek. Size and type of pipe to be confirmed during detailed design	not specifically discussed
Culvert - Jacking	LF		0	Through railway	n/a
Culvert - Horizontal Pile Driving	LF		0	Through railway	n/a
Bridge 1 - Superstructure	SF		6,200	200-lf roadway 7'-11" girder. Includes elements such as approach slab, abutment, barriers, and railings.	4.3.6
Bridge 2 - Superstructure	SF		6,200	200-lf roadway 5'-2" girder. Includes elements such as approach slab, abutment, barriers, and railings.	4.3.6
Bridge 1 - Foundation	LF		32	Drilled shaft foundation; depth 100-ft	4.3.6
Bridge 2 - Foundation	LF		32	Drilled shaft foundation; depth 100-ft	4.3.6
Rail	LF		0	None	n/a
Railway - Box Girder	SF		0	None	n/a
Railway - Foundation	LF		0	None	n/a
Railway - Shoe fly	LF		0	Temporary alignment	n/a
Permanent Access Features				KPFF expected to participate in these estimates	
Roads	Level		0%	Level 1 direct access, Level 2 moderately difficult, Level 3 difficult access	n/a
Utility Access Routes	varies		0	Describe utility access feature, such as boardwalk or all-weather gravel road	n/a
Erosion Control Features	L.F.		0	Describe quantity of expected erosion control measures	n/a
Public Access or Recreation Features				KPFF expected to participate in these estimates	
Trails	SF		0	Describe trail feature, such as gravel, mulch, asphalt concrete.	n/a
Bridges	SF		0	Describe bridge feature, such as wooden pedestrian, or H20 vehicle.	n/a
Kiosk	EA		0	Describe kiosk feature, such as size, material.	n/a
Restrooms	EA		0	Describe restroom feature, such as size, material.	n/a
Interpretive Signs	EA		2	Include # interpretive signs based on number of local public access points	not specifically discussed
Parking Area	SF		0	Describe parking area, such as size, material.	n/a
Other	EA		0	Describe other recreational features (see Corps criteria, ER 1105-2-100 for compatibility with ecosystem objectives)	n/a
Vegetation & Erosion Control					
Hydroseeding	AC		0	Describe desired seed mix (e.g.. native plants cost more)	n/a
Planting	AC		11.3	8.4 acres for banks on the north side of Chambers Creek. 1.9 acres for the corridor along the restored Garrison Springs creek and the area within the former mill site footprint); 1 acre for the tidal wetland on the north side of Chambers Creek by the marina.	4.3.3
Vegetation Maintenance	AC-YR		10.3	All areas described under planting (above), with the exception that active maintenance would not be performed in the 1-acre tidal wetland due to limited access.	4.3.3
Erosion / sediment BMPs - Temp.	AC		6	Typical BMPs used for this project may include stabilized construction entrances, sediment ponds or settlement tanks, hydroseed or mulch to stabilize roadway embankments, and silt fence.	not specifically discussed
Erosion / sediment BMPs - Permanent	AC		8.4	Erosion control for north bank of Chambers Creek prior to establishment of native vegetation plantings. Erosion control measures sufficient for 60 to 100 percent slopes in this area. Measures to be determined during detailed design.	not specifically discussed
Waterside controls - Temporary	LF		1,000	Allowance for 1000 LF of silt curtain during excavation of dam abutment soils, to control release of turbidity downstream	not specifically discussed
Construction Management					
Construction oversight	weeks		150	Assume 1 year for overwater work; 1 year for earthwork; 1 year for finish work. Needs to be evaluated in more detail during design development	4.3.7
Materials testing				Included in cost of material - no separate quantity	n/a
Design and Detailed Site Investigations					
Survey & Property, Utility Research	LS		1	% of construction cost	4.8
35% Design	LS		1	% of construction cost	n/a
65% design	LS		1	% of construction cost	n/a
90% design	LS		1	% of construction cost	n/a
100% design	LS		1	% of construction cost	n/a
Geotechnical Studies				Refer to design report for description of need	4.8
Cultural Studies				Refer to design report for description of need	4.8
HTWR Studies				Refer to design report for description of need	4.8
Project Agreement Activities				Unable to provide credibale estimate at 10% design	
Site-Specific Adaptive Management Features & Activities				List if known	
Monitoring Activities				Assume 5 crew-days/year for each monitoring parameter in design report for 5 yrs	
Monitoring (Type)	crew-days		200		4.7
Operations & Maintenance				Unable to provide credible estimate at 10% design	