Technical Memorandum

To: Mike Haley and Roger Dane (City of Redmond)

From: Mike Garello, PE; Dan Heckendorf (HDR), and Shane Cherry (Confluence)

Reviewed: Chad Wiseman

Date: April 23, 2014

Subject: Evans Creek Relocation - Concept Refinement

1.0 Introduction

HDR has been retained by the City of Redmond to provide a design for the relocation of a portion of Evans Creek in Redmond, WA. The proposed project is anticipated to begin at the existing upstream limit of the Washington State Department of Transportation (WSDOT) SR520 Eastside Wetlands Mitigation Project. The proposed project will extend upstream to approximately RM 0.74 just downstream of the NE Union Hill Road Bridge Crossing. Currently this reach of Evans Creek has a narrow riparian buffer, is channelized, is encroached by multiple industrial land uses, and is affected by limited water quality treatment or flow control of stormwater runoff. The proposed relocation will direct the creek through existing wetlands, resulting in a higher-functioning ecological system. It is anticipated that the proposed channel relocation will provide improvements to riparian buffer and floodplain connectivity, enhanced fish passage to the upper watershed, maintain or improve beneficial community access, and help facilitate potential redevelopment of adjacent industrial properties. A map showing the initial project elements as well as the general project location and vicinity is shown as Figure 1 for reference.

Multiple design and construction approaches were considered during the initial phases of project development. The initial concept identified the potential for establishing a channel path through the existing forested wetland using a “soft-touch” type of design and construction approach where the initial physical modification to the wetland floor could be minimized. This document explores existing and new information relative to project hydrology and topography, evaluates a total of four potential design and construction approaches, and recommends an approach that appears to suit the existing site characteristics and overall project objectives.

2.0 Purpose and Objective of this Document

The purpose of this TM is to collectively formulate and identify a preferred approach that could be carried forward through conceptual design, final design, and implementation. Information resulting from this effort can be used to initiate further alternative development and to provide the basic framework for conceptual and final design.

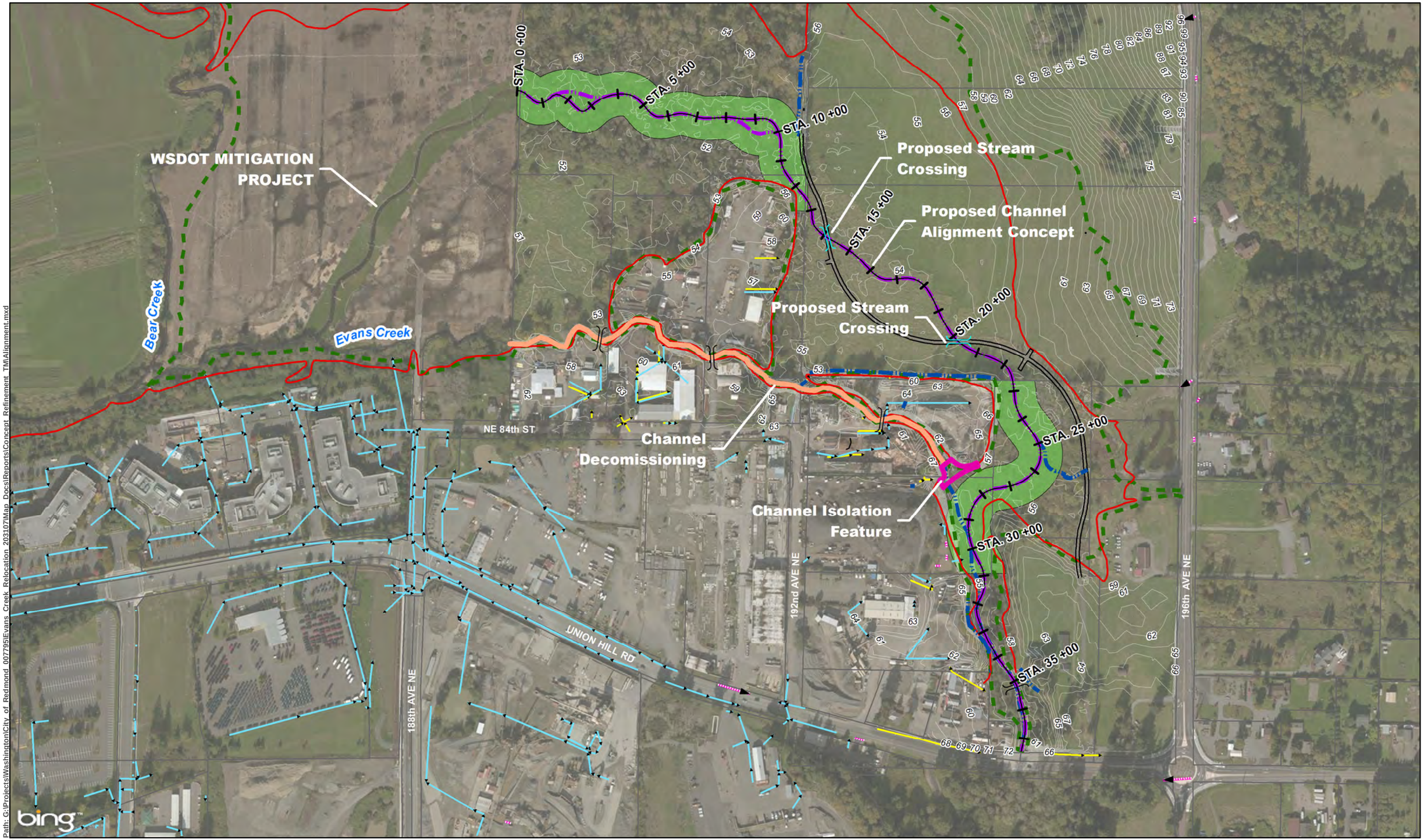

Path: G:\Projects\Washington\City of Redmond 007795\Evans Creek Relocation 203107\Map Docs\Reports\Concept Refinement TM\Alignment.mxd

Source: City of Redmond (2013), BING Online Imagery.

HDR

N

0 125 250 500 Feet

- Draft Proposed Channel Alignment
- Proposed Stream Crossing
- Proposed Channel Isolation Feature
- Proposed Channel Decomission
- Forested Wetland
- Existing Flow Path
- FEMA 100-Year Floodplain Delineation
- Existing Trail
- Culvert
- Storm pipe (COR)
- Storm pipe (Survey)
- Existing Bridge
- Approximate Wetland Boundary
- Parcel

Conceptual Refinement Memorandum

Figure 1

Evans Creek Relocation - Redmond, WA

The objective of this Technical Memorandum (TM) is to evaluate potential design and construction approaches in the context of pertinent information obtained during the initial phases of concept development. The evaluation considers alternatives in regards to the extent and specificity of proposed clearing, ground manipulation, and surface restoration requirements. Variations in the definition and implementation of the proposed channel planform and cross-sectional geometry are also considered as well as the required level of collaboration between the design team and the contractor.

Specifically, the following actions were conducted during development of this document:

- Obtained and reviewed available sources of project data,
- Performed hydrologic analysis and subsequent development of design flows,
- Evaluated existing reach hydraulics from a geomorphic perspective,
- Performed site reconnaissance,
- Reviewed and evaluated different design and construction approaches, and
- Recommended a design approach for review by the City and other project participants.

3.0 Overall Goals of Project

This project is listed in the WRIA 8 Chinook Conservation plan and will fulfill both local and Federal habitat improvement goals documented in that plan. The overall project goal is to provide a functioning urban stream relocation project that will improve environmental function within the context of existing and proposed urban land uses within the project area. Specifically, this goal will be met by:

- Enhancing in-stream habitat conditions,
- Providing an ample riparian buffer and floodplain,
- Improving fish passage to the upper watershed,
- Enhancing passive recreation,
- Heightening the potential for redevelopment of adjacent industrial properties.

4.0 Background

4.1 Integration with Previous Projects

The recently completed WSDOT SR520 Eastside Wetlands Mitigation Project has relocated a portion of Evans Creek downstream of the project site. This completed project dead ends along the western border of the project area and will serve as the downstream connection point for the proposed relocation of Evans Creek. The WSDOT SR520 project reach is identified in Figure 1 and shows how the upstream ending point of the channel is located on the western border of the Evans Creek Relocation project area. Currently, flow continues to be conveyed down the existing channel, which is routed south westerly through the industrial properties.

The channel design geometry for the WSDOT mitigation project was established using an active channel reference reach. The chosen section is located within the lowland floodplain, upstream

of the Union Hill Road NE Bridge, and at that time, was considered to be less impacted by adjacent development activities. During design, a typical bank full width of 20 feet and bank full flow depth of 2 and 2.5 feet were specified (WSDOT, 2012). The proposed dimensions of the meander planform mimics conditions observed within the upstream reference reaches, accounting for the active channel and most of the secondary, or side, channels. The active channel sinuosity was designed to mimic the value associated with the inferred pre-settlement channel. The radius of curvature was not specified due to the fact that no significant meander bends were identified within the reference reach (WSDOT, 2012). The following table and figure provide the typical section geometry and planform characteristics used by WSDOT for the constructed channel. As noted, the use of this channel geometry is appropriate for reaches with average gradients near 0.14%.

Table 1. Typical WSDOT Channel Design Characteristics.

Section Geometry	
Top Width (ft)	20
Bottom Width (ft)	12
Side Slopes (z:1)	2
Depth of Flow (ft)	2
Depth of Streambed Sediment (ft)	1
Planform and Profile Characteristics	
Meander Belt (ft)	100
Sinuosity	1.2
Profile Gradient (%)	0.14

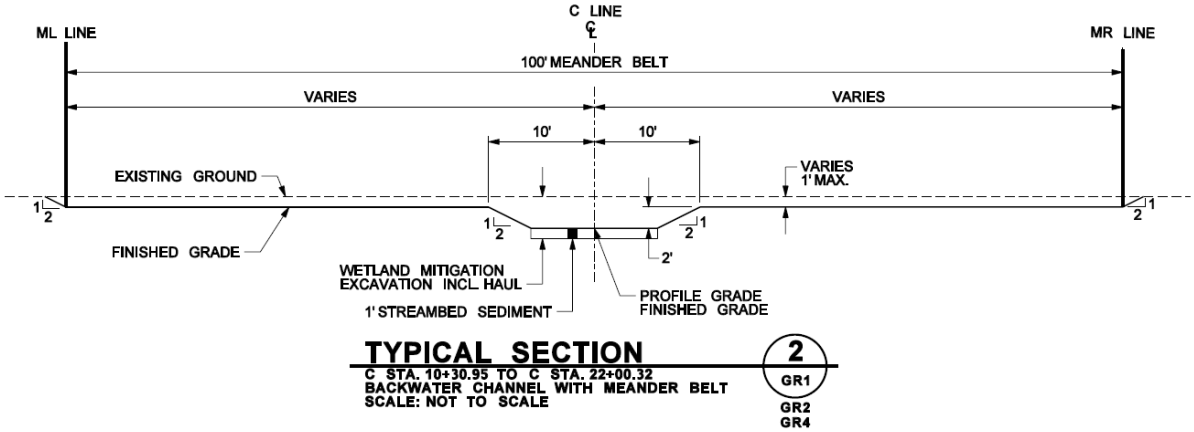

Figure 2. Typical channel cross-section implemented in the WSDOT project located downstream of the proposed project reach.

5.0 Site Reconnaissance

Two site visits were conducted by staff from both HDR and Confluence Environmental on May 15, 2013, and on September 18, 2013. Both site visits focused on the proposed new alignment

through the forested wetland on City of Redmond property. During the site visits, observations and measurements of topography, soils, and vegetation were made along the proposed alignment corridor.

The proposed alignment will have a very low gradient as it traverses a nearly flat landscape. From the proposed takeoff point from the existing channel to the upstream end of the new stream channel constructed by WSDOT, the new channel will fall less than 4 feet over almost 4,000 feet of length.

Within the forested wetland, the overall topography is flat, but at a small scale the ground surface is very irregular with micro-topographic variations. Fallen trees leave deep voids containing standing water among adjacent hummock laden surfaces. Soil conditions resulting from hand auger test pits indicate that the near surface soils at the site consist of a thin layer of topsoil/forest duff overlying alluvium. The alluvium is generally fine-grained consisting of interbedded layers of soft to medium stiff silt, organic silt and clay with varying amounts of sand. In some locations coarse-grained alluvium exists and is generally composed of medium dense or denser sand and gravel with variable silt and cobble content (GeoEngineers, 2013). Dense understory vegetation and numerous live and fallen trees occur throughout the site. Standing water was observed in locations throughout the wetland during both site visits even though both visits were preceded by dry weather. These observations suggest the forested wetland is perennially wet and wet soil conditions should be expected during construction regardless of timing. This implies that construction techniques using larger equipment and more conventional methods may be impaired due to presence of wet unstable soils without causing greater impacts to forested wetland resources. Alternative (i.e. softer) approaches can be used in these areas to accomplish the same goal but with less impact to existing resources.

6.0 Selection of Design and Construction Approach

Four design and construction approaches were considered: Soft Touch, Conventional Design and Construction, Adaptive, and an Integrative Approach.

- Soft Touch – The “Soft Touch” approach minimizes the direct modification of the landscape and relies on existing topography to allow stream flow introduced at the eastern edge of the forested wetland to find its way generally westward where it would flow into the WSDOT mitigation site. This approach would require that the overall topography exhibits a continuous gradient to the southwest where Evans Creek can be routed through the forested wetland with limited clearing and ground manipulation. Although a defined approach to accomplishing this would be specified during the design process, this method relies heavily on field interpretation of landforms and collaboration between the contractor and design team as construction occurs. Initial reconnaissance combined with the topographic survey indicates that this approach runs a high risk of routing overbank flow southward where it would impact adjacent properties outside of the project.
- Conventional Design and Construction – This approach is used in most construction projects. This method includes development of detailed design drawings and specifications which would clearly define and prescribe all aspects of proposed clearing,

ground manipulation, and surface restoration requirements. The proposed channel planform and cross-sectional geometry would be well defined and constructed on a prescribed path through the forested wetland. Although a high level of collaboration is still required between the design team and the contractor, implementation would rely less on field interpretation and more on the prescribed design elements.

- Adaptive – This approach includes the design and implementation of a series of prescribed design elements based upon field interpretation of performance specifications. Implementation of each design element would be based upon knowledge of the existing landform but would be influenced greatly by field interpretation as construction occurs. A general stream alignment corridor would be defined and design elements would be implemented as necessary to meet project performance criteria and conveyance requirements. Construction would occur in a step-wise process with a high level of collaboration with the project geomorphologist and engineer. Pre-defined design elements would be selected as construction moves forward to achieve performance objectives while still avoiding impacts to large trees, habitat elements such as logs with root wads, and stands of wetland vegetation that provide essential shade and slope stability for the project. The result is a stream channel configuration that is centered on inclusion of existing wetland habitat and avoidance of impact to sensitive wetland components.
- Integrative – The integrative method includes a combination of both Conventional and Adaptive construction techniques. Where the general planform and cross-section geometry is implemented, and where appropriate topography and landforms exist, impact to the existing landform will be limited by incorporating prescribed adaptive design elements which limit impacts to habitat features such as larger trees, downed trees with root wads, and stands of other vegetation that could be incorporated into the implemented project. Conventional design elements would include definition of a stream corridor and potential zone of channel excavation, earth berm structures to guide water flow westward and prevent flood impacts to neighboring properties to the south, stream crossings, and configuration of the channel transition zones. These zones would include areas where Evans Creek transitions longitudinally from a very defined stream channel into a variable, multiple channel, wetland feature, and then back again to a defined existing channel. The construction path implemented through the forested wetland would be based upon a performance specification in concert with field interpretation as defined in the adaptive approach.

To evaluate the general appropriateness of each potential design and construction approach a screening level evaluation table was developed that indicates advantages and disadvantages for each approach (Table 2).

Table 2. Screening level evaluation of design and construction approaches.

Method	Advantages	Disadvantages
Soft Touch	• Minimizes ecological impacts to the forested wetland. • Allows faster wetland/system recovery after construction. • Maintains high levels of shade which will reduce colonization of invasive vegetation. • Permitting: may be well-received by wetland-focused agencies due to wetland impact minimization	• Higher potential for unforeseen flooding impacts to neighboring properties to the south. • Uncertainty of construction scope may drive up construction bid prices. • May not ensure continuous fish passage. • Will require a longer period of time to evaluate performance. Adaptive management needed. • Relies more heavily on field interpretation. • Permitting: may be scrutinized by WDFW and tribes for fish passage.
Conventional Design and Construction	• Provides certainty for initial channel capacity and defined level of impact. • Design specificity may improve predictability of construction bids and performance. • Relies less on field interpretation. • Provides certainty for continuous fish passage. • Permitting: may be well-received by fish-focused agencies	• Has maximum impact footprint within the forested wetland. • May require a more extensive invasive vegetation maintenance program. • Permitting: May be scrutinized by wetland-focused agencies for greater temporary wetland impacts.
Adaptive	• Increases confidence in meeting project performance objectives over the “soft touch” approach. • Provides a real-time decision tree which fosters inclusion of existing wetland habitat features and limits impacts. • Permitting: helps to achieve both fish and wetland related objectives leading to broader agency support.	• Uncertainty of project scope may drive up construction bid prices. • Relies heavily on field interpretation to implement specified elements. • May require additional defined features to mitigate for flood conveyance requirements. • Permitting: agencies will require more detailed performance monitoring.

Method	Advantages	Disadvantages
Integrative	• Combines attributes of both Conventional and Adaptive methods which provides a balanced approach. • Improves the level of scope definition over the Adaptive and Soft Touch methods which will improve Contractor confidence during bidding. • Improves confidence in achieving all desired project goals by providing well-defined actions in certain reaches and then also using the adaptive approach where applicable to increase the use of existing habitat and limit impact to wetland features.	• Increases the potential impact to existing wetland resources above the Soft-Touch and Adaptive approach but less than the Conventional approach. • May require additional defined features to mitigate for flood conveyance requirements. • Permitting: Agencies will require more detailed performance monitoring.

6.1 Recommended Design and Construction Approach

Based upon the results from site reconnaissance, preliminary topographic data collection, and review of available hydrology data the design team recommends for the City's consideration that an Integrative approach be utilized during design and construction for this project. To the extent practical, this approach incorporates the advantages of both the "Soft Touch," and the "Conventional," techniques and applies them to appropriate areas of the project. This approach is believed to provide a sufficient level of specificity such that Contractors are able to bid and construct the project successfully with a higher level of confidence while also meeting project objectives associated with limiting construction related impacts and protecting sensitive wetland habitat. Use of Adaptive elements are also believed to maintain the highest level of overhead shade throughout construction which will ultimately be a key factor in controlling colonization of invasive plant species.

As briefly described above, the Integrative approach will be formulated around a number of Conventional design elements as well as a series of performance specifications that will guide construction through forested wetland sections. In general, Conventional design elements will clearly define the planform and cross-sectional channel geometry at locations where adaptive techniques are not considered appropriate, such as: upstream and downstream tie-ins with existing channels, areas where structures that redirect or isolate overbank flow are required to maintain flood conveyance, and where pedestrian trail network crossings occur. The adaptive approach will be utilized in reaches where appropriate topography and landforms exist – such as the forested wetland - limiting the overall land disturbance created by the project.

The Adaptive elements of this project can be implemented through development of a functional decision tree based upon a list of defined performance specifications. The list of performance specifications can be used as a guide by the Contractor as various wetland features are encountered during construction. Based on the observed perennial wet condition through the forested wetland even after dry weather periods in summer, a channel liner is not

recommended. Together with the design engineers, the path forward can be interpreted as construction proceeds. It is anticipated that considerable collaboration between the design team and the contractor will be required to ensure project performance and conveyance requirements are met. A visual representation of two potential channel geometry configurations has been provided within the two figures below. Specifically, Figure 3 displays a configuration where the conveyance requirements are met through a deeper single channel. Figure 4 showcases a multiple channel layout in which conveyance is provided within a primary creek channel and supplementary secondary side channels.

Although the final list of performance specifications will exhibit a much higher level of detail, the following example offers some insight into how this approach may be used as a decision guide through areas such as the forested wetland. The performance specifications applied and the level of detail can be developed later in the process as construction documents for this project are further developed.

- Contractor shall perform all construction activity within the 80 foot migration corridor indicated on the drawings and flagged in the field.
- Contractor shall excavate and remove native wetland material and substrate to create up to 60 cubic feet of conveyance area per every foot of channel created.
- Contractor shall maintain an average channel gradient, as outlined in Plan and Profile X of the drawings.
- Channels shall be excavated to a projected hydraulic depth of 1.5 feet unless the area is designated to be a pool. Contractor shall over excavate by 1-foot for placement of select streambed material prior to completion of channel construction.
- Channel top widths shall be no more than 40 feet and no less than 8 feet.
- Channel side slopes shall be no more than 2H:1V.
- Contractor shall create both single and multiple threaded channels with single thread reaches being no longer than 80 feet in length.
- Pools shall be excavated at the apex of each meander and/or as specified by the field geomorphologist. Pool areas shall be excavated to a depth of 3 feet and shall have an approximate length of two channel widths.
- The maximum number of channels shall be limited to three (3).
- Contractor shall avoid removal of live trees over 12-inches DBH. If such trees are to be cleared, Contractor shall reintegrate them as downed trees into the channel configuration within 50 feet of their original position.
- Contractor shall avoid removal of tree trunks with attached root masses. If such root masses are to me moved, Contractor shall reintegrate them into the channel configuration within 50 feet of their original position.
- Contractor shall coordinate review and gain approval of tree and root mass removal and/or relocation by City and Engineer.

- All final channel configurations shall be restored with 1 foot of select channel bed material as indicated in the contract specifications as shown in the contract drawings.
- Disturbed overbank areas for all final channel configurations shall be revegetated as indicated in the contract drawings.

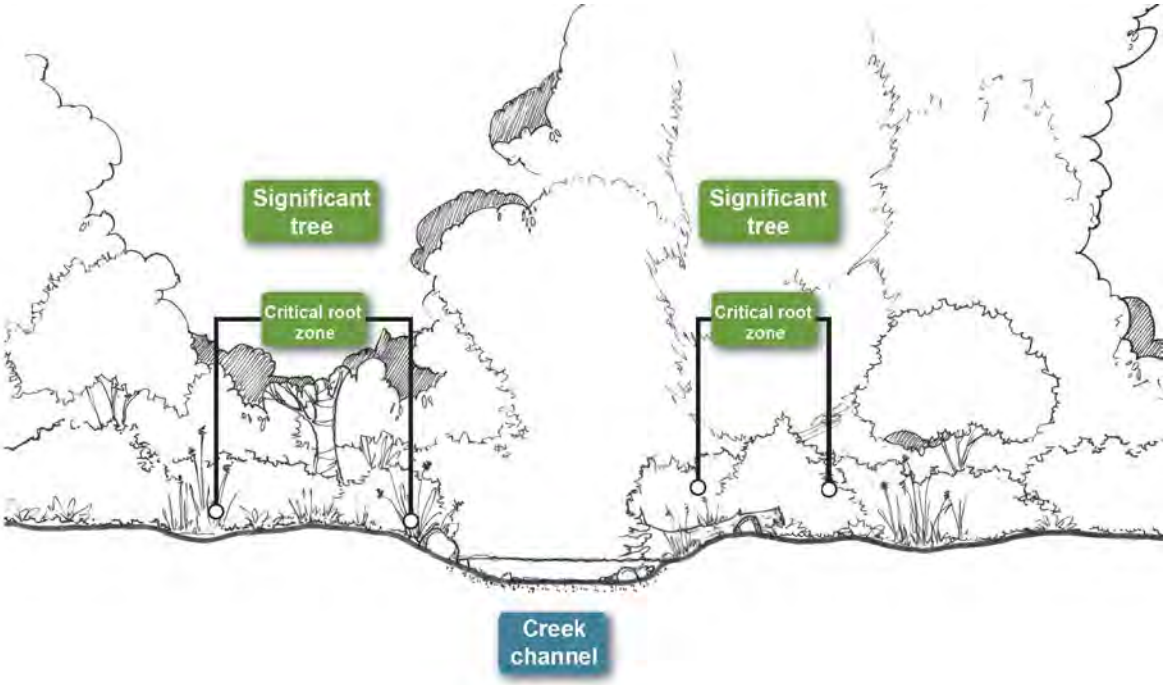

Figure 3. Illustration of single creek channel routed through forested wetland.

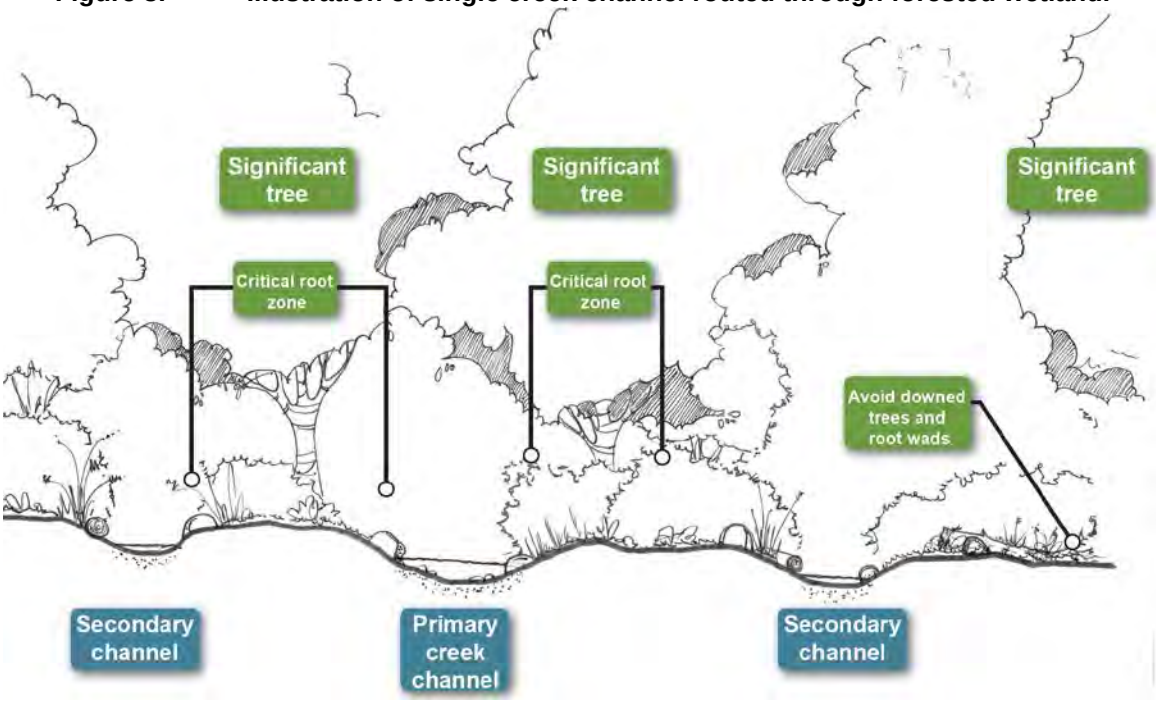

Figure 4. Illustration of alternate multiple creek channel configuration routed through forested wetland.

7.0 Preliminary Design Criteria

Through the existing forested wetland, the extremely low gradient of the landscape dictates a channel with a larger typical cross sectional configuration relative to stream flow due to the presence of lower velocities. Channel forming discharge for alluvial streams typically corresponds to flood flow recurrence of events between 1 and 5 years. The existing channel cross section shows a high channel top width relative to depth for flows in this frequency range.

Sediment dynamics will likely play a very small role in determining channel geometry. The low gradient will produce low bed shear stress values not capable of eroding or transporting most sediment. This is true for both existing and proposed future conditions. Encroachment of vegetation into the channel will more likely be a dominant factor in determining the effective channel dimensions, and it should be expected that as the effective channel is constricted by vegetation the frequency of overbank flooding will increase. The constructed dimensions of the channel will only be a starting point, and vegetation encroachment over time will dictate the actual hydraulic performance of the channel.

This perspective suggests that a notable challenge will be to ensure that overbank flow is routed in an acceptable way through the project site. Topographic survey indicates that the general trend is for water flowing over the landscape to move westward and southward. Overbank flow moving to the south through the forested wetland onto adjacent properties will need to be either acknowledged and accepted or routed westward to prevent unacceptable impacts to adjacent properties. The channel dimensions will not drive this aspect of hydraulic performance. Some other design feature (e.g. a low elevation berm or secondary parallel channels) will be needed to route overbank flow water generally westward. These will be added to the project as the more conventional design elements are formulated.

Recommended initial channel dimensions may be derived by comparison to existing channel dimensions corresponding to the 1-, 1.25-, and 1.5-year recurrence flood flows. The ultimate channel (after modified by vegetation encroachment) will probably be a multi-thread irregular channel with a high width to depth ratio (possibly over 30). The potential for cross-sectional channel changes will be studied further as design activities for this project continue.

7.1 Hydrology and Selection of Design Flows

Characterization of potential design flows was performed by fitting annual instantaneous peak flow data to Log Pearson Type III distribution as well as by conducting a flow duration analysis on the median daily flows. Hydrologic data for Evans Creek is available from a streamflow gaging site just upstream of the project extents at the Union Hill Bridge crossing. The period of record and historic ownership for this site are provided in Table 3 below. Design flows for this project were established using data from the 1987-current period of record in order to characterize flows representative of recent changes in the physical characteristics of the basin and would therefore be more applicable to contemporary hydrologic conditions.

Table 3. Stream Gage Information.

Operator	Gage Identification	Period of Record
USGS	12124000	1955-1987(int.)
King County	18a - Evans Creek @ Union Hill Road	1987-current(int.)

The resulting flow duration data is provided in Table 4 and is graphed in Figure 5. Results show that mean daily flows of 4 cfs are exceeded 95% of the time while flows of 14 cfs are exceeded 50% of the time. These flows may represent those values observed in Evans Creek during both late summer and winter/spring base flow conditions.

Table 4. Flow Duration Analysis.

Percent of Time Exceeded	Design Flow (cfs)
99	2
95	4
90	5
75	7
50	14
25	26
10	44
5	57
1	95

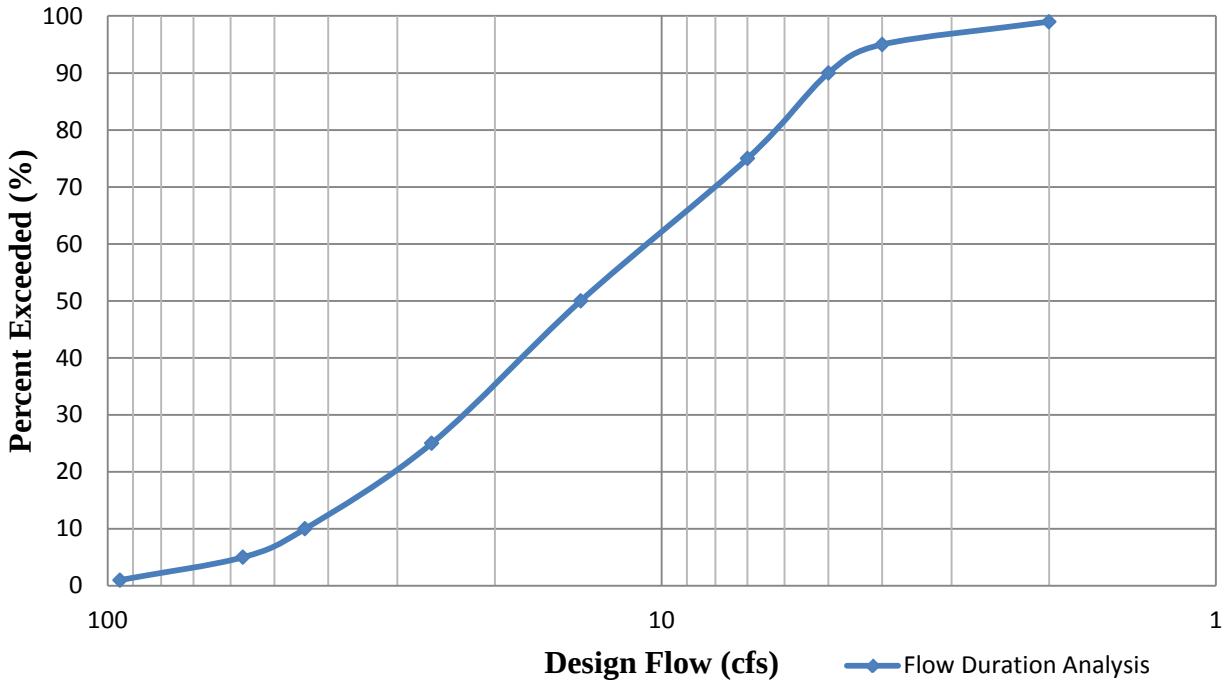

Figure 5. Flow Duration Analysis.

A flood frequency analysis was conducted for the available annual peak flow data. Specifically, the HEC-SSP software was used to conduct a standard Log-Pearson Type III (LP3) analysis for the entire period of record. Peak recurrence flows generated from this analysis were found to be lower – but still within approximately 20% of those published by FEMA in the current effective Flood Insurance Study (FIS) (FEMA, 2005). Results from the Flood frequency analysis are provided in Table 5 and Figure 6 below.

Through review of the analysis, it was observed that the published FIS peak recurrence flows are more conservative and will therefore be utilized during evaluation of the 100-year floodplain and floodway associated with the proposed project. The more frequent flood events resulting from the LP3 analysis performed for this project will be used to establish various design parameters for the proposed channel cross-section. The table and additional figure provided below display a comparison of the results from the flood frequency analysis.

Table 5. Flood Frequency Analysis.

Recurrence Interval	Peak Recurrence Flow (cfs)	
	Effective FIS	LP3 Analysis
500-Year	496	321
100-Year	400	291
50-Year	360	261
10-Year	280	195
5-year	N/A	165
2-year	N/A	121
1.5-year	N/A	94
1.25-year	N/A	79
1-year	N/A	49

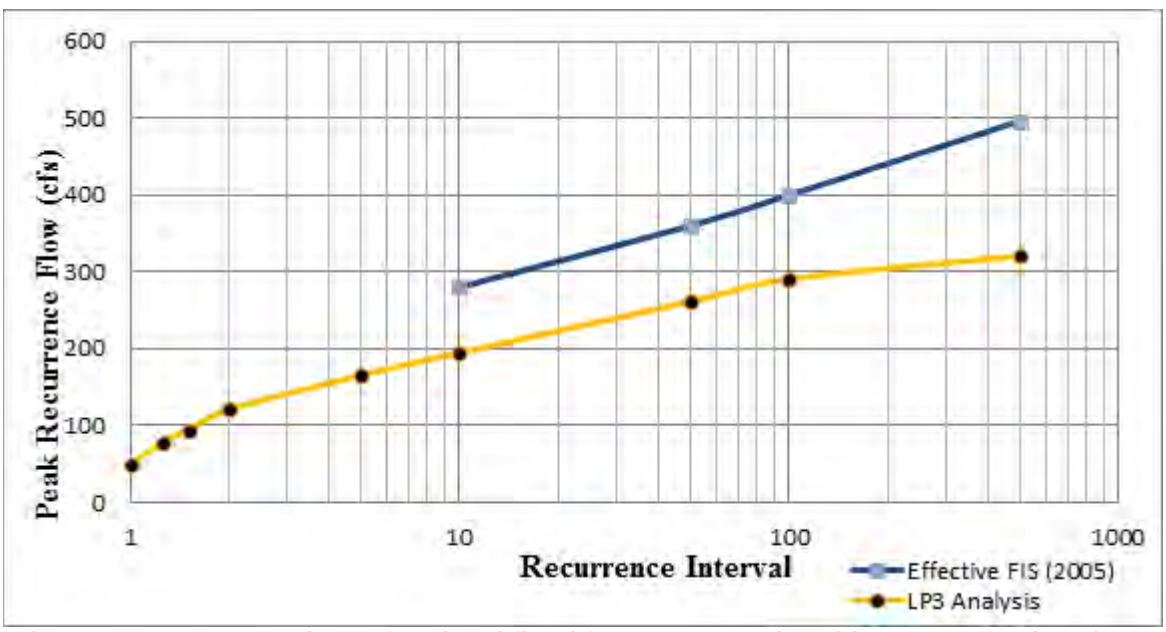

Figure 6. Comparison of updated flood frequency results with FEMA Effective Flows published in FIS.

7.2 Cross-sectional Geometry and Planform

The design cross section will be a physical starting point at construction completion. Following construction, the effective cross section for conveying flow will be dictated by the balance between the flow forces and the gradual encroachment of surrounding vegetation. Constructed channel dimensions derived using this approach would have a top width of 35 to 45 feet with a typical depth on the order of 1.5 feet and maximum depths ranging from 1.5 to 3 feet. This is larger than the 20 width used in the WSDOT design and reference reach to account for the flatter gradient of the new alignment and allowing for future vegetation encroachment. The ultimate channel (after modified by vegetation encroachment) will probably be a multi-thread irregular channel with a high width to depth ratio (e.g. over 30).

The anticipated planform for a natural alluvial channel through a low-gradient forested wetland would be a multi-thread, wide, shallow, irregular channel. A challenge will be to construct a starting channel that will allow this ultimate form to evolve while minimizing the temporary impact to the wetland and routing water generally westward in a way that minimizes potential effects on adjacent properties located south of the project site.

8.0 Further Considerations for Design

One key to implementing a successful project will be to anticipate the range of possible performance outcomes after the first phase is implemented and have appropriate contingencies defined and ready for implementation, should unintended results be observed.

One of the key challenges associated with the design will be to minimize potential surface water effects on neighboring properties. The most straightforward contingency to address this risk would be a low-profile earth berm along the southern project perimeter to steer overbank flows westward. This approach may prove effective, but it would introduce a hydrologic barrier to the existing wetlands on adjacent properties to the south. An alternative solution may include additional property acquisition to include a larger extent of existing wetlands available to accept additional overbank flow as part of the project. As the design process moves forward, consideration of integrating portions of adjacent parcels may be beneficial to the project outcome.

9.0 Next Steps

The following items are identified as next steps required in the project implementation process.

- Submit the results from this preliminary assessment to the City and other project participants such as permitting/regulatory agencies and County Flood Control for consideration;
- Obtain feedback and gain concurrence from the City and project participants on the proposed design approach and preliminary design criteria;
- Strategize regulatory approach and discuss acceptance of a potential methods with agency representatives;
- Complete all data collection activities and integrate data sources in the design process;

- Perform preliminary engineering calculations to determine basic size and configuration of conceptual alternative elements,
- Complete the hydrologic and hydraulic analysis for alternative channel configurations;
- Make modifications to the proposed channel configuration to more effectively achieve project objectives;
- Produce a 30 percent set of design drawings representing the overall design layout and construction approach for this project;
- Reevaluate both funding and regulatory requirements for the project as a whole; and
- Proceed to final design and implementation.

10.0 References Cited

Federal Emergency Management Agency (FEMA), 2005. Flood Insurance Rate Map, King County, Washington and Incorporated Areas.

GeoEngineers, 2013. Draft Geotechnical Engineering Services: Evans Creek Relocation Project Report.

Washington State Department of Transportation (WSDOT), 2012. SR520 Eastside Wetlands Mitigation Hydrology Report/Basis of Design.