SHEET INDEX	
SHEET	TITLE
1	COVER SHEET
2	GENERAL NOTES
3	EROSION CONTROL I
4	EROSION CONTROL II
5	TRAFFIC CONTROL PLAN
6	SITE PLAN & ROADWAY LAYOUT
7	LAYOUT
8	FOUNDATION PLAN
9	RIPRAP AND CHANNEL LAYOUT
10	ABUTMENT DETAILS
11	ABUTMENT REINFORCING
12	WINGWALL DETAILS
13	WINGWALL DETAILS II
14	FRAMING PLAN & TYPICAL SECTION
15	GIRDER DETAILS
16	GIRDER DETAILS II
17	BRIDGE RAILING TYPE TWO TUBE PEDESTRIAN
18	GUARDRAIL TRANSITION DETAILS
19	STREAM DETAILS
20	PLANTING PLAN
21	BAR LIST I
22	BAR LIST II

WEST UNCAS ROAD, SALMON CREEK CULVERT REPLACEMENT

COUNTY PROJECT NO. 1805951934

JEFFERSON COUNTY PUBLIC WORKS DEPARTMENT, WA

S26, T29N, R2W, W.M.

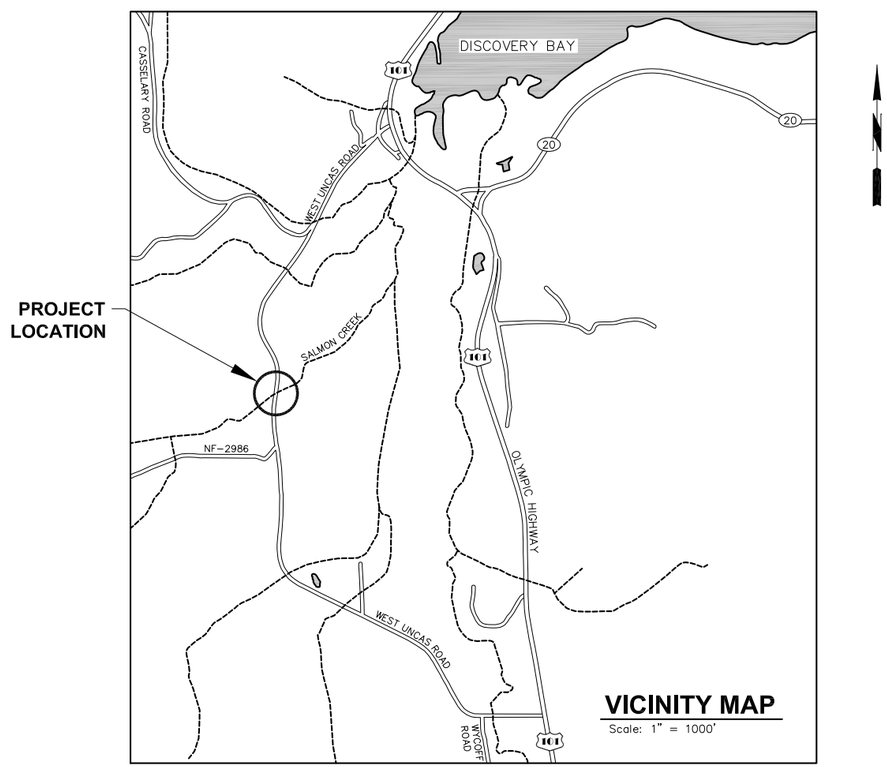

VICINITY MAP
Scale: 1" = 1000'

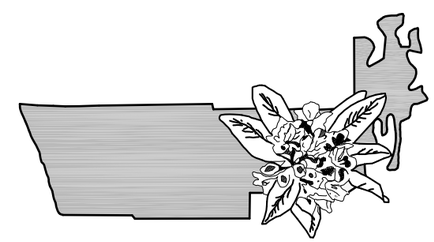

COUNTY ENGINEER

APPROVAL DATE

CALL TWO DAYS BEFORE YOU DIG 811

100% DRAFT DESIGN SET

NO.	REVISION	BY	DATE

DESIGNED: JLP | CHECKED: DRS | PROJECT NO. 1805951934 | SCALE: AS NOTED
DRAWN: JLP | PROJECT ENGR: DRS
APPROVED: _____ CITY ENGINEER | DATE: 8/27/2015

BAR IS ONE INCH ON ORIGINAL DRAWING ADJUST SCALES ACCORDINGLY 0" 1"

Jefferson County
Department of Public Works

SHEARER DESIGN L.L.C.
Bridge Design, Construction Engineering, Infrastructure Aesthetics

3613 Phinney Ave N, # B
Seattle WA 98103
(206) 781-7830
WWW.SHEARERDESIGN.NET

West Uncas Road Culvert Replacement
JEFFERSON COUNTY, WA
COVER SHEET

SHEET 1 OF 22
FILE NO. SD-0265

Aug 27, 2015 - 4:17pm joshua \\SHEARERSERVER\Jobs\0265 W Uncas\Design\DWG\0265 Cover Sheet.dwg Layout Name: COVER SHEET

GENERAL NOTES

THIS STRUCTURE HAS BEEN DESIGNED IN ACCORDANCE WITH THE REQUIREMENTS OF THE AASHTO LRFD BRIDGE DESIGN SPECIFICATIONS SIXTH EDITION. ALL STRUCTURAL ELEMENTS HAVE BEEN DESIGNED IN ACCORDANCE WITH THE REQUIREMENTS FOR LOAD AND RESISTANCE FACTOR DESIGN. LIVE LOADING IS HL-93.

THIS STRUCTURE HAS BEEN DESIGNED TO ACCOMMODATE 4 INCHES OF HMA AT 140 PCF. THIS REPRESENTS 2 INCHES INSTALLED AT THE TIME OF CONSTRUCTION AND AN ALLOWANCE FOR A FUTURE OVERLAY OF 2 INCHES.

SEISMIC DESIGN OF THIS STRUCTURE HAS BEEN PERFORMED FOR SITE CLASS D USING THE FOLLOWING DESIGN PARAMETERS:

AS = 0.432g
SDS = 0.991g
SD1 = 0.558g

ALL WORK SHALL CONFORM TO THE CURRENT STANDARD PLANS AND 2016 SPECIFICATIONS OF THE WASHINGTON STATE DEPARTMENT OF TRANSPORTATION (WSDOT), AND JEFFERSON COUNTY STANDARDS UNLESS INDICATED OTHERWISE BY THE CONTRACT DOCUMENTS.

UNLESS OTHERWISE SHOWN IN THE PLANS, THE CONCRETE COVER MEASURED FROM THE FACE OF THE CONCRETE TO THE FACE OF ANY REINFORCING STEEL SHALL BE 3 INCHES WHEN AGAINST THE GROUND, 2½" TO THE TOP MAT OF THE ROADWAY SLAB, AND 2 INCHES AT ALL OTHER LOCATIONS. ALL EXPOSED EDGES SHALL HAVE A ¾ INCH CHAMFER.

ALL STEEL REINFORCING BARS SHALL BE ASTM A615 AND EPOXY COATED PER ASTM A775 WHERE NOTED.

THE CONTRACTOR MAY NOT BACKFILL BEHIND THE ABUTMENT WALLS PRIOR TO CASTING THE END DIAPHRAGMS.

IF THE CONTRACTOR DISCOVERS ANY DISCREPANCIES BETWEEN THE PLANS AND THE EXISTING CONDITIONS ENCOUNTERED, THE CONTRACTOR SHALL IMMEDIATELY NOTIFY THE DESIGN ENGINEER.

ALL DIMENSIONS SHOWN ARE HORIZONTAL AND SHOULD BE ADJUSTED FOR GRADE AND SLOPE WHERE APPROPRIATE. ALL DIMENSIONS AND ELEVATIONS SHALL BE VERIFIED IN THE FIELD BY THE CONTRACTOR.

DRAWING SCALES ARE FOR REFERENCE ONLY, THE DRAWINGS SHALL NOT BE SCALED TO FURNISH DIMENSIONAL INFORMATION NOT SHOWN. VERIFY ANY DISTANCE OR MEASUREMENT NOT SHOWN WITH THE ENGINEER.

UNDERGROUND UTILITIES ARE KNOWN TO EXIST IN THE AREA OF CONSTRUCTION. IT IS THE RESPONSIBILITY OF THE CONTRACTOR TO CONTACT ANY AND ALL UTILITIES IN THE AREA AND FIELD VERIFY THESE LOCATIONS PRIOR TO CONSTRUCTION. THE ONE-CALL NUMBER FOR UNDERGROUND UTILITIES IS: 811. IT IS THE RESPONSIBILITY OF THE CONTRACTOR TO NOTIFY THE ENGINEER PROMPTLY OF ANY CONFLICT.

ALL FINAL CUT AND FILL SLOPES SHALL BE SEEDED, MULCHED AND FERTILIZED FOR EROSION CONTROL UNLESS OTHERWISE SHOWN IN THE PLANS.

THE TEMPORARY EROSION/SEDIMENT CONTROL PLAN SHALL BE IMPLEMENTED PRIOR TO STARTING ANY EARTHWORK.

ABBREVIATIONS

ABT.	ABOUT
ABUT.	ABUTMENT
APPROX.	APPROXIMATE
A.O.B.E.	AS ORDERED BY THE ENGINEER
℄	CENTERLINE
C.J.	CONSTRUCTION JOINT
CLR.	CLEAR
CSBC	CRUSHED SURFACING BASE COURSE
CSTC	CRUSHED SURFACING TOP COURSE
EA.	EACH
E.F.	EACH FACE
ELEV.	ELEVATION
EQ.	EQUAL
LT.	LEFT
MAX.	MAXIMUM
MIN.	MINIMUM
N.T.S.	NOT TO SCALE
O.C.	ON CENTER
REINF.	REINFORCING
RT.	RIGHT
SPA.	SPACING
STA	STATION
STD.	STANDARD
SYM.	SYMMETRICAL
T.E.S.C.	TEMPORARY EROSION & SEDIMENT CONTROL
TYP.	TYPICAL
U.N.O.	UNLESS NOTED OTHERWISE

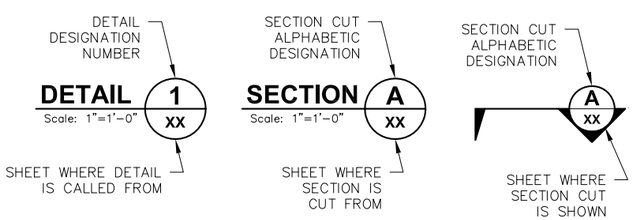

LEGEND

- EXISTING MINOR CONTOURS
- EXISTING MAJOR CONTOURS
- PROPOSED MINOR CONTOURS
- PROPOSED MAJOR CONTOURS
- PROJECT CENTERLINE
- RIGHT OF WAY (ROW)
- GEOTECHNICAL BORING LOCATION

100% DRAFT DESIGN SET

NO.	REVISION	BY	DATE

DESIGNED: JLP | CHECKED: DRS | PROJECT NO. 1805951934
DRAWN: JLP | PROJECT ENGR: DRS
APPROVED: _____ CITY ENGINEER
SCALE: AS NOTED
DATE: 8/27/2015
BAR IS ONE INCH ON ORIGINAL DRAWING ADJUST SCALES ACCORDINGLY 0" 1"

Jefferson County
Department of Public Works

SHEARER DESIGN L.L.C.
Bridge Design, Construction Engineering, Infrastructure Aesthetics
3613 Phinney Ave N. # B
Seattle WA 98103
(206) 781-7830
WWW.SHEARERDESIGN.NET

West Uncas Road Culvert Replacement
JEFFERSON COUNTY, WA
GENERAL NOTES

SHEET 2 OF 22
FILE NO. SD-0265

Aug 27, 2015 - 4:17pm jpshua \\SHEARERSERVER\Jobs\0265 W Uncas\Design\DWG\0265 General Notes.dwg Layout Name: GENERAL NOTES

GENERAL SPECIFICATIONS

1. THE EROSION/SEDIMENTATION CONTROL MEASURES SHOWN ARE PER THE DEPARTMENT OF ECOLOGY STORMWATER MANAGEMENT MANUAL FOR WESTERN WASHINGTON (SWMMWW) BEST MANAGEMENT PRACTICES (BMPs) AND ARE THE MINIMUM REQUIREMENTS FOR THE ANTICIPATED SITE CONDITIONS. THE CONTRACTOR SHALL INSPECT AND MAINTAIN THESE ESC MEASURES DAILY, AND SHALL MAINTAIN AND UPGRADE THESE MEASURES AS NECESSARY TO PREVENT SEDIMENT-LADEN WATER FROM EITHER FLOWING OFF THE SITE, OR INTO NEW/EXISTING STORM DRAINAGE FACILITIES, SUCH AS CATCH BASINS, CULVERTS, OR STORM SEWERS.

2. THE CONTRACTOR IS RESPONSIBLE FOR INSTALLING ROCK CONSTRUCTION ENTRIES AT ANY AND ALL LOCATIONS USED TO ENTER OR EXIT THE PROJECT SITE PER SWMMWW: BMP C105.

3. EROSION CONTROL MEASURES ARE TO BE IMPLEMENTED PRIOR TO ANY OTHER SITE WORK, AND TO REMAIN IN PLACE UNTIL ROAD CONSTRUCTION IS COMPLETE.

4. SOILS ARE NOT TO REMAIN EXPOSED AND UNWORKED FOR MORE THAN THE TIME PERIODS SET FORTH BELOW TO PREVENT EROSION.
   - DURING THE DRY SEASON (MAY 1ST TO SEPT. 30TH): 7 DAYS
   - DURING THE WET SEASON (OCT 1ST TO APRIL 30TH): 2 DAYS

PRESERVE NATURAL VEGETATION

(PER SWMMWW: BMPs C101)

DEFINITION:
MINIMIZING EXPOSED SOILS AND CONSEQUENT EROSION BY CLEARING ONLY WHERE CONSTRUCTION WILL OCCUR.

PURPOSE:
TO REDUCE EROSION BY PRESERVING NATURAL VEGETATION WHEREVER PRACTICABLE.

CONDITIONS WHERE PRACTICE APPLIES:
NATURAL VEGETATION SHOULD BE PRESERVED ON STEEP SLOPES, NEAR PERENNIAL AND INTERMITTENT WATER COURSES OR SWALES, AND ON BUILDING SITES IN WOODED AREAS.

ESTABLISHING TEMPORARY & PERMANENT VEGETATIVE COVER

(PER SWMMWW: BMPs C120 & C121)

PURPOSE:
TO REDUCE EROSION AND SEDIMENTATION BY STABILIZING EXPOSED SOILS WITH VEGETATION AND MULCHING.

CONDITIONS WHERE PRACTICE APPLIES:

AREAS WHICH WILL NOT BE SUBJECT TO HEAVY WEAR BY ON-GOING CONSTRUCTION TRAFFIC.

EXPOSED GROUND SURFACE AT END OF CONSTRUCTION PERIOD (PERMANENT COVER MUST BE ESTABLISHED PRIOR TO REMOVAL OF ANY EROSION CONTROL MEASURES).

TEMPORARY OR PERMANENT STABILIZATION OF NEW OR DISTURBED DITCHES OR SWALES.

DESIGN CRITERIA / SPECIFICATIONS: TEMPORARY EROSION CONTROL GRASSES:
TEMPORARY GRASS COVER MEASURES MUST BE FULLY ESTABLISHED BY NOVEMBER 1 OR OTHER COVER MEASURE WILL HAVE TO BE IMPLEMENTED UNTIL ADEQUATE GRASS COVERAGE IS ACHIEVED. TO ESTABLISH AN ADEQUATE GRASS STAND FOR CONTROLLING EROSION BY NOVEMBER 1, IT IS RECOMMENDED THAT SEEDING AND MULCHING OCCUR BY OCTOBER 1.

HYDRO MULCH BE APPLIED WITH GRASS SEED AT A RATE OF 2000lb/ACRE. ON SLOPES STEEPER THAN 10%, HYDROSEED AND MULCH SHALL BE APPLIED WITH A BONDING AGENT (TACKIFIER). APPLICATION RATE AND METHODOLOGY TO BE PER SEED SUPPLIER RECOMMENDATIONS.

DRY, LOOSE, WEED-FREE STRAW USED AS MULCH SHALL BE APPLIED AT DOUBLE THE HYDRO MULCH APPLICATION REQUIREMENT (4000lb/ACRE). ANCHOR STRAW BY WORKING IN BY HAND OR WITH EQUIPMENT (ROLLERS CLEAT TRACKS, ETC..).

MULCH SHALL BE SPREAD UNIFORMLY IMMEDIATELY FOLLOWING SEEDING.

SOIL PREPARATION – TOP SOIL SHOULD BE PREPARED ACCORDING TO LANDSCAPE PLAN, IF AVAILABLE, OR RECOMMENDATIONS OF GRASS SEED SUPPLIER. IT IS RECOMMENDED THAT SLOPES BE ROUGHENED BEFORE SEEDING BY "TRACK-WALKING" PER SWMMWW: BMP C130, OR OTHER METHOD TO PROVIDE MORE STABLE SITES FOR SEEDS TO REST.

SEEDING – THE REQUIRED EROSION CONTROL GRASS SEED MIX IS AS FOLLOWS:

TESC SEED MIX:

NAME		POUNDS PURE LIVE SEED/ACRE
CHEWINGS OR ANNUAL BLUE GRASS	(FESTUCA RUBRA VAR. COMMUTATA) (POA ANNA)	48
PERENNIAL RYE	(LOLIUM PERENNE)	60
REDTOP OR COLONIAL BENTGRASS	(AGROSTIS ALBA) (AGROSTIS TENUIS)	6
WHITE DUTCH CLOVER	(TRIFOLIUM REPENS)	6

FERTILIZATION FOR GRASS SEED – CONTRACTOR SHALL SUPPLY A COMMERCIALLY AVAILABLE STARTER FERTILIZER AS PER SUPPLIER'S RECOMMENDATIONS. THE FERTILIZER FORMULA AND APPLICATION RATE SHALL PROVIDE THE FOLLOWING TYPES AND AMOUNTS OF NUTRIENTS AT A MINIMUM:
TOTAL NITROGEN AS N – ONE POUND PER THOUSAND SQUARE FEET
AVAILABLE PHOSPHORIC ACID AS P2 O5 – ONE POUND PER THOUSAND SQUARE FEET
SOLUBLE POTASH AS K2O – ONE POUND PER THOUSAND SQUARE FEET
50-60 PERCENT OF THE TOTAL NITROGEN SHELL BE DERIVED FROM UREA FORM OR UREAFORMALDEHYDE. THE REMAINDER MAY BE DERIVED FROM ANY SOURCE. DEVELOPMENT AREAS WITHIN 50 FEET OF WATER BODIES AND WETLANDS MUST USE A NON-PHOSPHORUS FERTILIZER.

THE FERTILIZER FORMULATION AND APPLICATION RATE SHALL BE APPROVED BY THE ENGINEER BEFORE USE.

NETTING AND ANCHORS, AS NEEDED – FOR DISTURBED AREAS ON SLOPES AND IN DITCHES/SWALES, BIODEGRADABLE NETTING OR JUTE IS DESIRABLE AND MAY BE USED INSTEAD OF BONDING AGENTS TO PROVIDE A STABLE AREA FOR SEEDING. NETTING SHOULD BE ANCHORED PER MANUFACTURER'S RECOMMENDATIONS.

WATERING – SEEDING SHALL BE SUPPLIED WITH ADEQUATE MOISTURE TO ESTABLISH GRASS. SUPPLY WATER AS NEEDED, ESPECIALLY IN ABNORMALLY HOT OR DRY WEATHER OR ON ADVERSE SITES. WATER APPLICATION RATES SHOULD BE CONTROLLED TO PROVIDE ADEQUATE MOISTURE WITHOUT CAUSING RUNOFF.

RE-SEEDING – AREAS WHICH FAIL TO ESTABLISH GRASS COVER ADEQUATE TO CONTROL EROSION SHALL BE RE-SEEDED AS SOON AS SUCH AREAS ARE IDENTIFIED, AND ALL APPROPRIATE MEASURES TAKEN TO ESTABLISH ADEQUATE COVER.

AT THE END OF SITE CONSTRUCTION, PAVING, APPROVED PERMANENT SITE LANDSCAPING OR ESTABLISHMENT OF A HEALTHY STAND OF GRASS (OR ALTERNATIVE VEGETATION AS APPROVED) MUST OCCUR PRIOR TO REMOVAL OF SITE EROSION CONTROL MEASURES.

STRAW MULCH

(PER SWMMWW: BMP C121 & TABLE 4.1.8)

PURPOSE:
TO REDUCE EROSION BY PROVIDING A PROTECTIVE COVER OVER DISTURBED BARE OR RESEEDED SOILS. ALSO CAN BE USED TO ENHANCE SUCCESS OF SEEDING/REVEGETATION.

CONDITIONS WHERE PRACTICE APPLIES:
AS A MULCH TO ENHANCE VEGETATION ESTABLISHMENT IN AREAS THAT HAVE BEEN SEEDED.

DESIGN CRITERIA / SPECIFICATIONS:
LOOSE, WEED-FREE STRAW MULCH SHALL BE APPLIED AT A RATE OF 5 BALES PER 1000 S.F. OR 2-3 TONS PER ACRE, AND SHALL HAVE A MINIMUM DEPTH IN PLACE OF 2-3 INCHES.

MULCH MUST BE STABILIZED IN PLACE BY HAND OR MACHINE PUNCHING THE STRAW INTO THE SOIL, SPRAYING IT WITH A TAKING AGENTS, OR COVERING IT WITH AND EROSION BLANKET. SEE "EROSION BLANKETS" FOR APPROPRIATE DESIGN CRITERIA FOR SUCH COVERINGS.

EROSION BLANKETS

(PER SWMMWW: BMP C122)

PURPOSE
TO PROVIDE IMMEDIATE PROTECTION AND PHYSICAL STABILIZATION OF DISTURBED SOILS. TYPICALLY USED WHEN VEGETATIVE COVER CANNOT BE ACHIEVED DUE TO SOILS, SLOPES OR TIME OF YEAR. CAN BE USED TO ENHANCE SUCCESS OF SEEDING, PLANTING AND/OR SODDING.

CONDITIONS WHERE PRACTICE APPLIES
ON AREAS OF STEEP SLOPES (GREATER THAN 50%) AND AREAS OF MODERATE SLOPES THAT ARE PRONE TO EROSION.

AS SUPPLEMENTAL AID TO SEED AND/OR MULCH TREATMENT ON SLOPES OR IN DITCHES OR SWALES.

DESIGN CRITERIA / SPECIFICATIONS
EROSION BLANKETS MAY BE USED ON LEVEL AREAS AND ON SLOPES UP TO 1:1. WHERE SOIL IS HIGHLY ERODABLE NETTING SHALL ONLY BE USED IN CONJUNCTION WITH AN ORGANIC MULCH SUCH AS STRAW OR WOOD FIBER. THE BLANKET MUST BE APPLIED SO THAT IT IS IN COMPLETE CONTACT WITH THE SOIL; IF IT IS NOT, EROSION WILL OCCUR BENEATH IT. EROSION BLANKETS SHALL BE SECURELY ANCHORED TO THE SLOPE PER MANUFACTURER'S RECOMMENDATIONS.

DEFORMED PLASTIC FILAMENT MATTING SUCH AS ENKAMAT (AND OTHER EROSION CONTROL BLANKETS AS APPROVED) MAY BE USED FOR STREAM VELOCITY PROTECTION AND OTHER SPECIAL APPLICATIONS WHEN APPROVED BY THE JEFFERSON COUNTY, DEPARTMENT OF PUBLIC WORKS.

PLASTIC SHEET COVERING

(PER SWMMWW: BMP C123)

PURPOSE
TO PROVIDE IMMEDIATE PROTECTION TO SLOPES AND DISTURBED AREAS WHEN VEGETATIVE COVER CANNOT BE ACHIEVED DUE TO SOILS, SLOPES OR TIME OF YEAR. TO PROVIDE EROSION PROTECTION ON SOILS, SPOILS, AND OTHER ERODABLE STOCKPILES.

CONDITIONS WHERE PRACTICE APPLIES
DISTURBED AREAS WHICH REQUIRE IMMEDIATE EROSION PROTECTION.

ON AREAS OF STEEP SLOPES (GREATER THAN 50%) AND AREAS OF MODERATE SLOPES THAT ARE PRONE TO EROSION.

AS A TEMPORARY MEASURE TO PROVIDE EROSION PROTECTION AND ASSIST IN GERMINATION ON AREAS SEEDED BETWEEN NOVEMBER 1 AND MARCH 31.

DESIGN CRITERIA / SPECIFICATIONS
PLASTIC SHEETING SHALL BE POLYETHYLENE AND HAVE A MINIMUM THICKNESS OF 6 MIL.

COVERING SHALL BE INSTALLED AND MAINTAINED TIGHTLY IN PLACE BY USING SANDBAGS OR TIRES ON ROPES WITH A MAXIMUM 10 FEET GRID SPACING IN ALL DIRECTIONS. ALL SEAMS SHALL BE TAPED OR WEIGHTED DOWN FULL LENGTH AND THERE SHALL BE AT LEAST A 12 INCH OVERLAP OF ALL SEAMS. FOR SEAMS PARALLEL TO THE SLOPE CONTOUR, THE UPHILL SHEET SHALL OVERLAP THE DOWNHILL SHEET. NO RUNOFF SHALL BE ALLOWED TO RUN UNDER THE PLASTIC COVERING.

DRAINAGE FROM AREAS COVERED BY PLASTIC SHEETING SHALL BE CONTROLLED SUCH THAT NO DISCHARGE OCCURS DIRECTLY ONTO UNCONTROLLED, DISTURBED AREAS OF THE CONSTRUCTION SITE.

CLEAR PLASTIC SHEETING MAY BE INSTALLED ON AREAS SEEDED BETWEEN NOVEMBER 1 TO MARCH 31 TO PROVIDE A GREENHOUSE-TYPE ENVIRONMENT, AND REMAIN UNTIL VEGETATION IS FIRMLY ESTABLISHED.

USE OF PLASTIC SHEETING MAY CAUSE CHANGES IN THE TRADITIONAL RUNOFF PATTERNS CONCENTRATING FLOWS. THIS CONCENTRATED FLOW MAY REQUIRE ADDITIONAL DOWN SLOPE EROSION CONTROL.

CHECK DAMS

(PER SWMMWW: BMP C207)

PURPOSE
TO REDUCE THE VELOCITY OF CONCENTRATED FLOWS, REDUCING EROSION OF THE SWALE OR DITCH, AND PROVIDING FOR SEDIMENTATION OF SUSPENDED SOIL PARTICLES.

CONDITIONS WHERE PRACTICE APPLIES
IN NEW OR DISTURBED DITCHES AND SWALES TO REDUCE VELOCITIES AND EROSION.

IN CONSTRUCTION SITE DITCHES OR SWALE CONVEYING RUNOFF FROM DISTURBED AREAS (OTHER BASE AND COVER MEASURES STILL REQUIRED IN ADDITION TO THE CHECK DAMS FOR DISTURBED DRAINAGE AREAS).

NO CHECK DAMS MAY BE PLACED IN STREAMS, WITHOUT JEFFERSON COUNTY, DEPARTMENT OF PUBLIC WORKS AND STATE AGENCIES APPROVAL AS REQUIRED.

DESIGN CRITERIA / SPECIFICATIONS
SEE DETAIL BELOW

CHECK DAMS SHALL BE CONSTRUCTED OF EITHER ROCK OR A GEOTEXTILE ENCASED CHECK DAM.

CONSTRUCT A 1 FOOT DEEP SUMP IMMEDIATELY UPSTREAM OF CHECK DAMS FOR STORAGE OF SETTLED SEDIMENT.

CHECK DAMS SHALL BE SPACED SUCH THAT THE TOE OF THE UPSTREAM DAM IS AT THE SAME ELEVATION AS THE TOP OF THE NEXT DOWNSTREAM DAM.

ROCK CHECK DAMS SHALL BE CONSTRUCTED OF ROCK SPALLS, 4"-MINUS. THE ROCK MUST BE PLACED BY HAND OR MECHANICAL PLACEMENT (NO DUMPING OF ROCK TO FROM DAM) TO ACHIEVE COMPLETE COVERAGE OF THE DITCH OR SWALE AND TO ENSURE THAT THE CENTER OF THE DAM IS LOWER THAN THE EDGES.

CHECK DAMS SHALL BE CHECKED FOR SEDIMENT ACCUMULATION AFTER EACH SIGNIFICANT RAINFALL. SEDIMENT SHALL BE REMOVED BEFORE FILLING SUMP.

CONCRETE HANDLING & WASHOUT AREA

(PER SWMMWW: BMP C151 & C154)

PURPOSE:
TO MINIMIZE AND ELIMINATE CONCRETE, CONCRETE PROCESS WATER, AND CONCRETE SLURRY FROM ENTERING WATERS OF THE STATE. CONCRETE SPILLAGE OR CONCRETE DISCHARGE TO SURFACE WATERS OF THE STATE IS PROHIBITED.

CONDITIONS WHERE PRACTICE APPLIES:
ANY TIME CONCRETE IS USED. CONCRETE CONSTRUCTION PROJECTS INCLUDE BUT ARE NOT LIMITED TO: CURBS, SIDEWALKS, ROADS, BRIDGES, FOUNDATIONS, FLOORS, RUNWAYS.

DESIGN CRITERIA / SPECIFICATIONS:
WASHOUT OF CONCRETE TRUCKS, CHUTES, PUMPS, AND INTERNALS SHALL BE PERFORMED AT AN APPROVED OFF-SITE LOCATION OR IN A DESIGNATED CONCRETE WASHOUT AREA PER BMP C154.

DO NOT WASH OUT CONCRETE TRUCKS ONTO THE GROUND, OR INTO STORM DRAINS, OPEN DITCHES, STREETS, OR STREAMS.

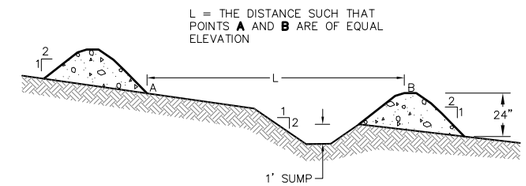

ROCK CHECK DAM
SCALE: N.T.S.

SIDE VIEW

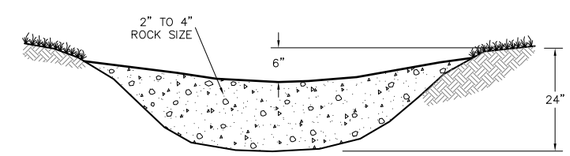

ROCK CHECK DAM
SCALE: N.T.S.

FRONT VIEW
(PER SWMMWW: FIG. 4.2.7)

100% DRAFT DESIGN SET

NO.	REVISION	BY	DATE

DESIGNED: JLP | CHECKED: DRS | PROJECT NO. 1805951934
DRAWN: JLP | PROJECT ENGR: DRS
APPROVED: _____ CITY ENGINEER
SCALE: AS NOTED
DATE: 8/27/2015
BAR IS ONE INCH ON ORIGINAL DRAWING ADJUST SCALES ACCORDINGLY 0" 1"

Jefferson County
Department of Public Works

SHEARER DESIGN L.L.C.
Bridge Design, Construction Engineering, Infrastructure Aesthetics
3613 Phinney Ave N. # A
Seattle WA 98103
(206) 781-7830
WWW.SHEARERDESIGN.NET

West Uncas Road Culvert Replacement
JEFFERSON COUNTY, WA
EROSION CONTROL I

SHEET 3 OF 22
FILE NO. SD-0265

Aug 27, 2015 - 4:17pm jashua \\SHEARERSERVER\Jobs\0265 W Uncas\Design\DWG\0265 Erosion Control.dwg Layout Name: EROSION CONTROL I

SILT FENCE

(PER SWMMWW:BMP C233)

1. THE FILTER FABRIC (CONSTRUCTION GEOTEXTILE FOR TEMPORARY SILT FENCE) SHALL BE PURCHASED IN A CONTINUOUS ROLL, 60 INCHES WIDE, CUT TO THE LENGTH OF THE BARRIER TO AVOID USE OF JOINTS. WHEN JOINTS ARE NECESSARY, THE FILTER FABRIC SHALL BE SPLICED TOGETHER ONLY AT A SUPPORT POST, WITH A MINIMUM 6 INCHES OVERLAP, AND BOTH ENDS SECURELY FASTENED TO THE POST. ALL STANDARD WEIGHT FILTER FABRICS SHALL HAVE ADDITIONAL SUPPORT.
2. THE FENCE POSTS SHALL BE SPACED 6.0' MAX. APART WHEN THERE IS NO BACKING, OR 8.0' MAX. APART IF WIRE BACKING IS USED, AND DRIVEN SECURELY INTO THE GROUND (A MINIMUM OF 12").
3. A TRENCH SHALL BE EXCAVATED, UPSLOPE AND ADJACENT TO THE POST TO ALLOW THE FILTER FABRIC TO BE BURIED A MINIMUM OF 4".
4. THE WIRE MESH SUPPORT, OR POLYMERIC MESH FENCE SHALL BE FASTENED SECURELY TO THE UPSLOPE SIDE OF THE POSTS USING HEAVY-DUTY WIRE STAPLES AT LEAST 1 INCH LONG, TIE WIRES, OR HOG RINGS. THE WIRE SHALL EXTEND INTO THE TRENCH A MINIMUM OF 3 INCHES AND SHALL NOT EXTEND MORE THAN 2.5 FT. ABOVE THE ORIGINAL GROUND SURFACE.
5. THE TRENCH SHALL BE BACKFILLED WITH NATIVE MATERIAL.
6. SILT FENCES SHALL BE REMOVED WHEN THEY HAVE SERVED THEIR USEFUL PURPOSE, BUT NOT BEFORE THE UPSLOPE AREA HAS BEEN PERMANENTLY STABILIZED.
7. SILT FENCES SHALL BE INSPECTED IMMEDIATELY AFTER EACH RAINFALL AND AT LEAST DAILY DURING PROLONGED RAINFALL. ANY REQUIRED REPAIRS SHALL BE MADE IMMEDIATELY.
8. SILT FENCE PERFORMANCE SHALL BE EVALUATED AND SILT FENCE LOCATIONS SHALL BE EVALUATED AND ADJUSTED AS DIRECTED OR APPROVED BY THE ENGINEER AND THE PERMITTING AUTHORITY.
9. SILT FENCE SHALL BE INSTALLED TO FOLLOW CONTOURS, WHERE FEASIBLE.
10. IF FENCE MUST CROSS CONTOURS, GRAVEL CHECK DAMS SHALL BE INSTALLED AS DESCRIBED IN STANDARD SPECS.
11. MAINTENANCE STANDARDS:
    - A. ANY DAMAGE SHALL BE REPAIRED IMMEDIATELY.
    - B. IF CONCENTRATED FLOWS ARE EVIDENT UPHILL OF THE FENCE, THEY MUST BE INTERCEPTED AND CONVEYED TO A SEDIMENT TRAP OR POND.
    - C. SEDIMENT SHALL BE REMOVED AND PROPERLY DISPOSED OF WHEN THE SEDIMENT IS 1/3 THE HEIGHT OF FENCE.
    - D. IF THE FILTER FABRIC HAS DETERIORATED DUE TO ULTRAVIOLET BREAKDOWN, IT SHALL BE REPLACED.

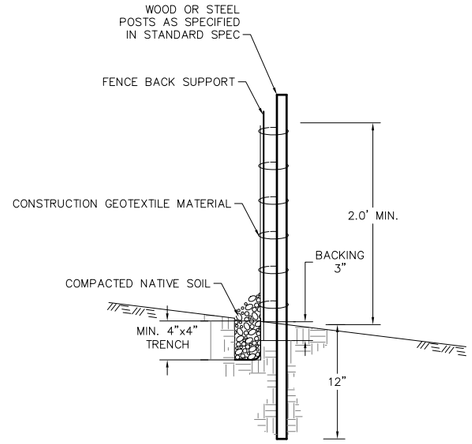

SILT FENCE STAKING DETAIL

SCALE: N.T.S.

NOTES:

1. DIG TRENCH 20" – 30" UPSTREAM FROM THE SEWN EDGE.
2. PLACE AND STAPLE APPROXIMATELY 3" OF THE FRONT APRON IN THE TRENCH AND BACKFILL. PLACE THE REAR APRON UNDER THE CHECK DAM UNIT EXTENDING OUT THE DOWNSTREAM SIDE.
3. TO ASSEMBLE MORE THAN ONE SECTION, OVERLAP THE FABRIC 6" WITH THE ENDS OF THE UNITS TIGHTLY ABUTTED.
4. STAPLE THE FRONT APRON DOWN IN THE TRENCH AND BACKFILL.
5. FINISH STAPLING USING THE PATTERN AS SHOWN IN PLAN VIEW.

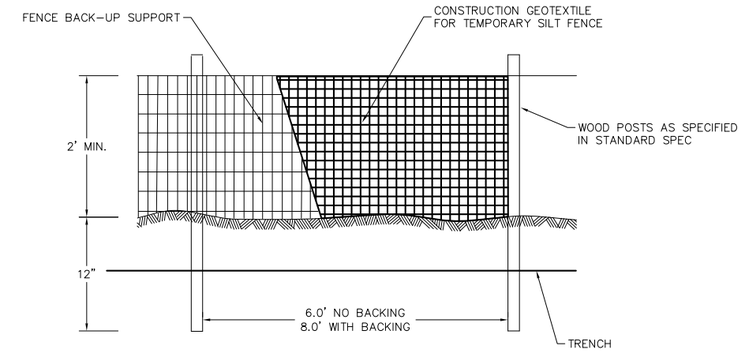

CONSTRUCTION GEOTEXTILE FOR TEMPORARY SILT FENCE

SCALE: N.T.S.

SILT FENCE ELEVATION

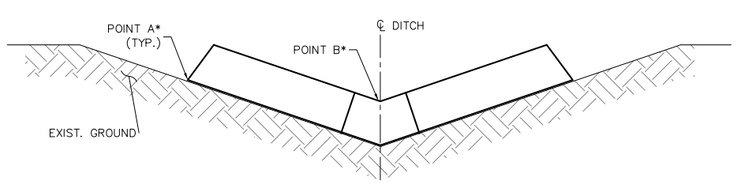

SECTION B

NO SCALE

FRONT VIEW

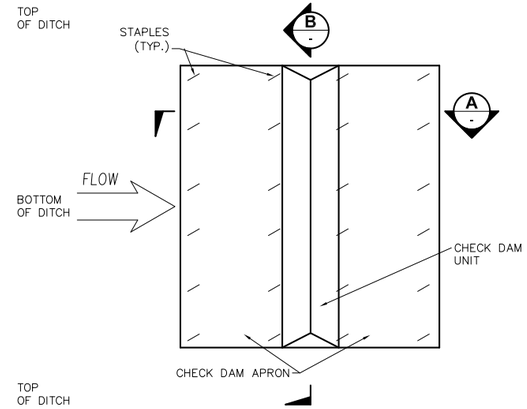

PLAN VIEW

SCALE: N.T.S.

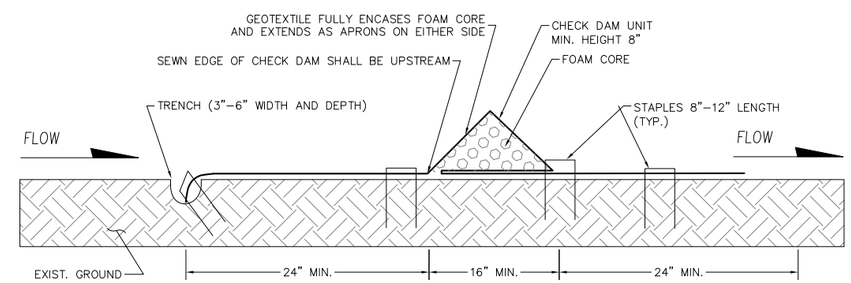

SECTION A

NO SCALE

SIDE VIEW

GEOTEXTILE ENCASED CHECK DAM INSTALLATION FOR V-BOTTOM DITCH

(PER SWMMWW:BMP C208)

SCALE: N.T.S.

100% DRAFT DESIGN SET

NO.	REVISION	BY	DATE

DESIGNED: JLP | CHECKED: DRS | PROJECT NO. 1805951934
DRAWN: JLP | PROJECT ENGR: DRS
APPROVED: _____ CITY ENGINEER | DATE: 8/27/2015
SCALE: AS NOTED
BAR IS ONE INCH ON ORIGINAL DRAWING ADJUST SCALES ACCORDINGLY 0" 1"

Jefferson County
Department of Public Works

SHEARER DESIGN L.L.C.
Bridge Design, Construction Engineering, Infrastructure Aesthetics
3613 Phinney Ave N. # A
Seattle WA 98103
(206) 781-7830
WWW.SHEARERDESIGN.NET

West Uncas Road Culvert Replacement
JEFFERSON COUNTY, WA
EROSION CONTROL II

SHEET 4 OF 22
FILE NO. SD-0265

Aug 27, 2015 - 4:17pm joshua \\SHEARERSERVER\Jobs\0265 W Uncas\Design\DWG\0265 Erosion Control.dwg Layout Name: EROSION CONTROL II

CLASS A SIGN TABLE

SIGN NUMBER	SIGN COLOR	SIGN SIZE	S.F. AREA	QUANTITY	TOTAL S.F.
W14-2	B/O	36 x 36	9.00	2	18
W20-8	B/O	36 x 36	9.00	2	18
R11-2	B/W	48 x 30	10.00	2	20
CUSTOM	B/O	60 x 42	17.50	2	35
TOTAL:					91

SIGN GENERAL NOTES

- SIGNS PER TABLE AND MUTCD

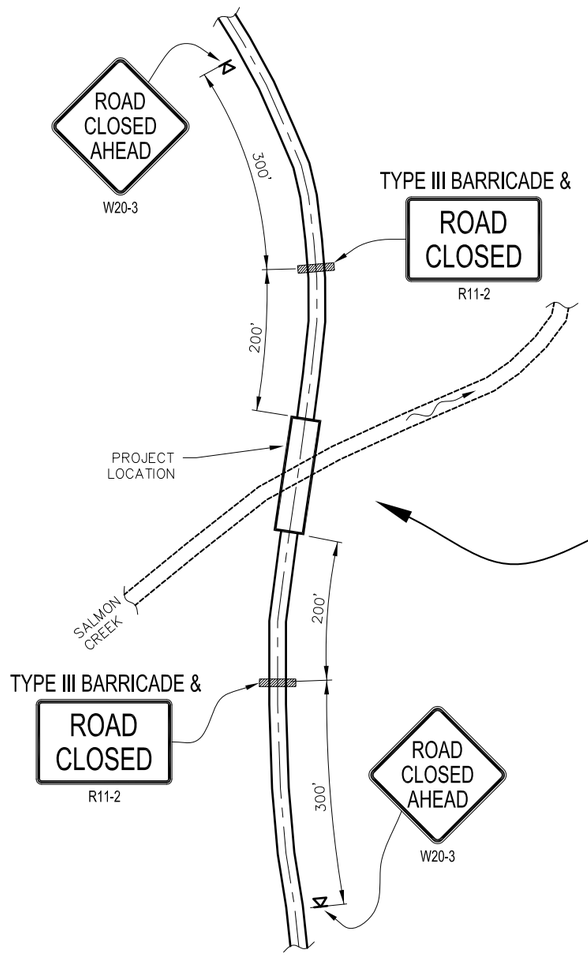

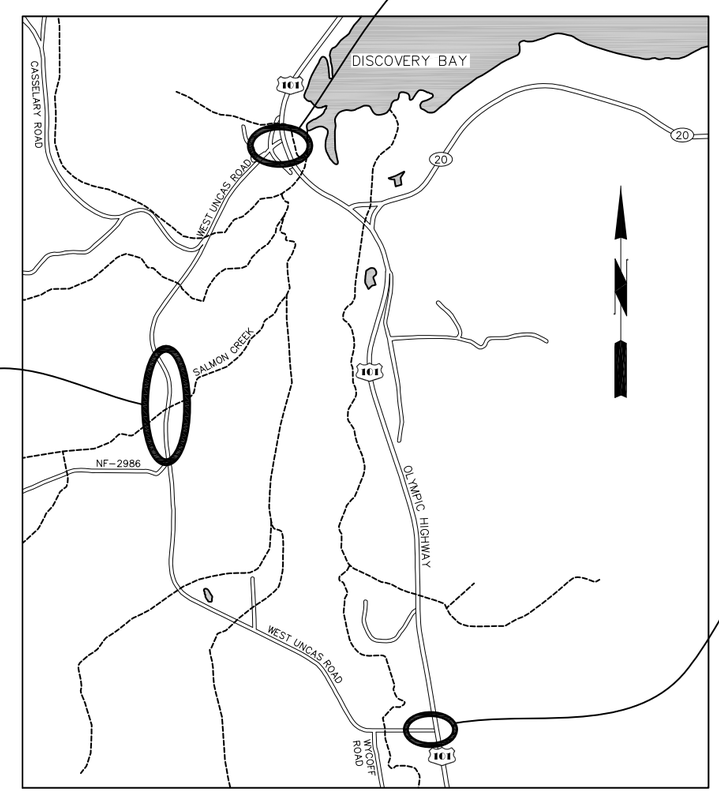

PROJECT LOCATION

Scale: 1" = 1000'

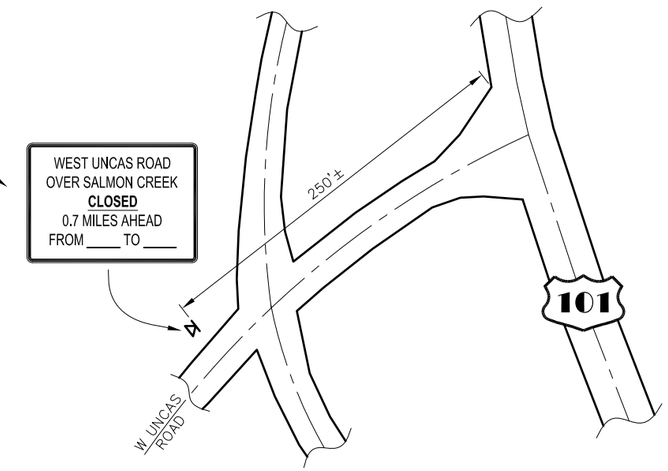

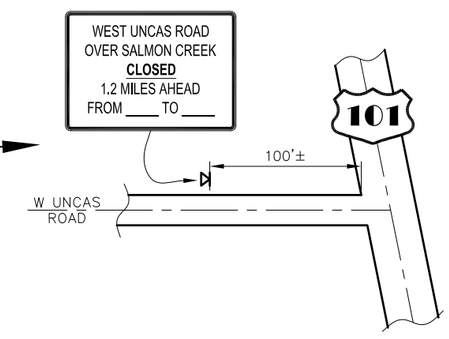

100% DRAFT DESIGN SET

NO.	REVISION	BY	DATE

DESIGNED: JLP | CHECKED: DRS | PROJECT NO. 1805951934 | SCALE: AS NOTED
DRAWN: JLP | PROJECT ENGR: DRS
APPROVED: _____ CITY ENGINEER | DATE: 8/27/2015

BAR IS ONE INCH ON ORIGINAL DRAWING ADJUST SCALES ACCORDINGLY 0" 1"

Jefferson County
Department of Public Works

SHEARER DESIGN L.L.C.
Bridge Design, Construction Engineering, Infrastructure Aesthetics
3613 Phinney Ave N, # B
Seattle WA 98103
(206) 781-7830
WWW.SHEARERDESIGN.NET

West Uncas Road Culvert Replacement
JEFFERSON COUNTY, WA
TRAFFIC CONTROL PLAN

SHEET 5 OF 22
FILE NO. SD-0265

Aug 27, 2015 - 4:17pm jashua \\SHEARERSER\VERJobs\0265 W Uncas\Design\DWG\0265 Traffic Control Plan.dwg Layout Name: TRAFFIC CONTROL PLAN

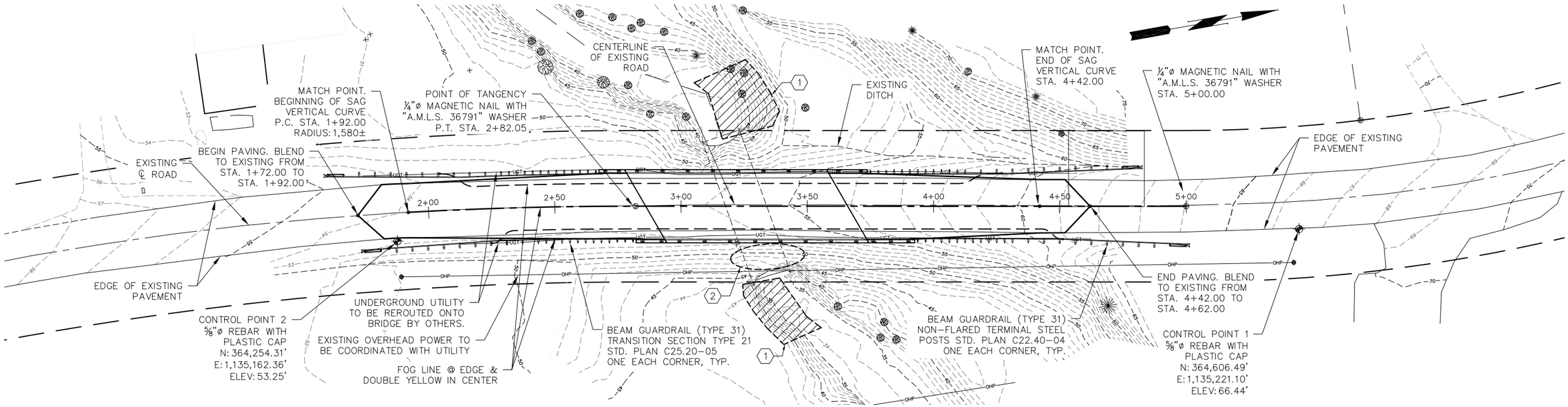

SITE PLAN & ROADWAY LAYOUT

Scale: 1"=20'-0"

EXISTING CONTOURS SHOWN WITH PROPOSED ROAD

(1) REMOVE SUBMARINE NETTING

(2) REMOVE SAND BAGS

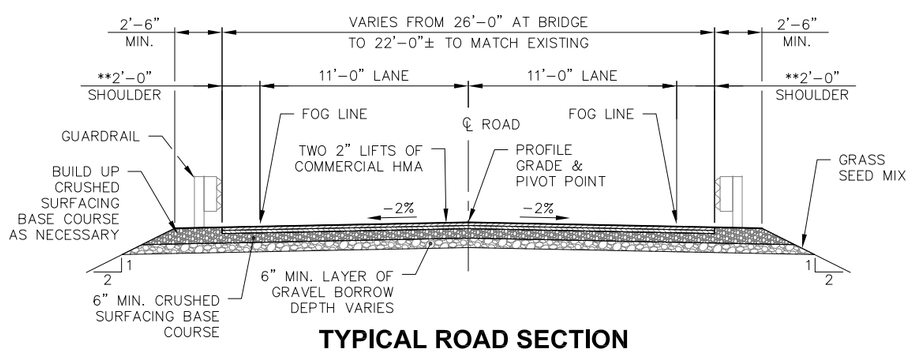

TYPICAL ROAD SECTION

Scale: 1/4" = 1'-0"

**SHOULDERS TAPER FROM 2'-0" NEAR BRIDGE TO ZERO WHEN MATCHING EXISTING PAVEMENT

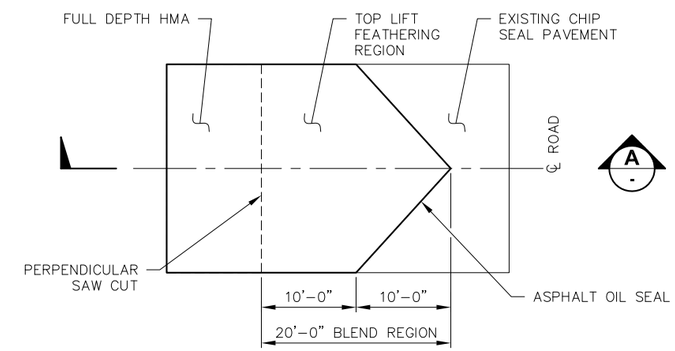

FEATHERED CHIPSEAL TO HMA PLAN

Scale: 1/8" = 1'-0"

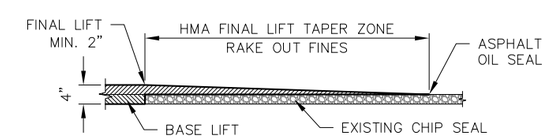

SECTION A

Scale: 3/4" = 1'-0"

SURVEY CONTROL POINTS

DESCRIPTION	NORTHING	EASTING	ASSUMED ELEVATION	NOTES
CONTROL #1	364606.49	1135221.10	66.44	5/8-INCH REBAR WITH PLASTIC CAP
CONTROL #2	364254.31	1135162.36	53.25	5/8-INCH REBAR WITH ORANGE CAP
STA. 1+92.00	364260.57	1135151.87	53.91	CENTERLINE ROAD, BEGINNING OF PAVING
STA. 2+85.05	364349.62	1135165.49	54.23	CENTERLINE ROAD, POINT OF TANGENCY
STA. 5+00.00	364465.09	1135204.26	64.14	CENTERLINE ROAD, END OF STATIONING

100% DRAFT DESIGN SET

NO.	REVISION	BY	DATE

DESIGNED: JLP | CHECKED: DRS | PROJECT NO. 1805951934 | SCALE: AS NOTED
DRAWN: JLP | PROJECT ENGR: DRS
APPROVED: _____ CITY ENGINEER | DATE: 8/27/2015
BAR IS ONE INCH ON ORIGINAL DRAWING ADJUST SCALES ACCORDINGLY 0" 1"

Jefferson County
Department of Public Works

SHEARER DESIGN L.L.C.
Bridge Design, Construction Engineering, Infrastructure Aesthetics
3613 Phinney Ave N, # B
Seattle WA 98103
(206) 781-7830
WWW.SHEARERDESIGN.NET

West Uncas Road Culvert Replacement
JEFFERSON COUNTY, WA
SITE PLAN & ROADWAY LAYOUT

SHEET 6 OF 22
FILE NO. SD-0265

Aug 27, 2015 - 4:17pm joshua \\SHEARERSERVER\Jobs\0265 W Uncas\Design\DWG\0265 Roadway Layout.dwg Layout Name: SITE PLAN & ROADWAY LAYOUT

S26, T29N, R2W, W.M.
JEFFERSON COUNTY

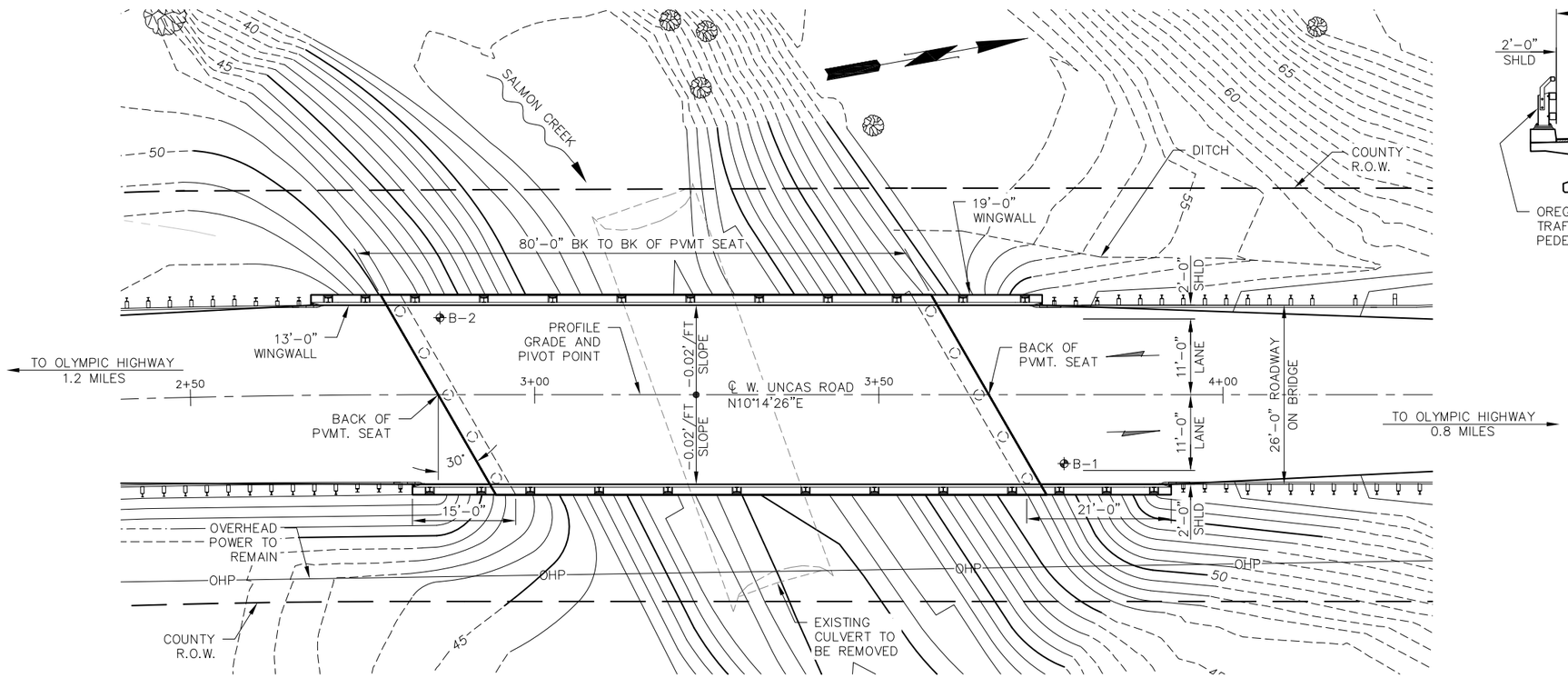

BRIDGE PLAN

Scale: 1" = 10'-0"

BEARING OF BOTH ABUTMENTS IS N70°14'26"E

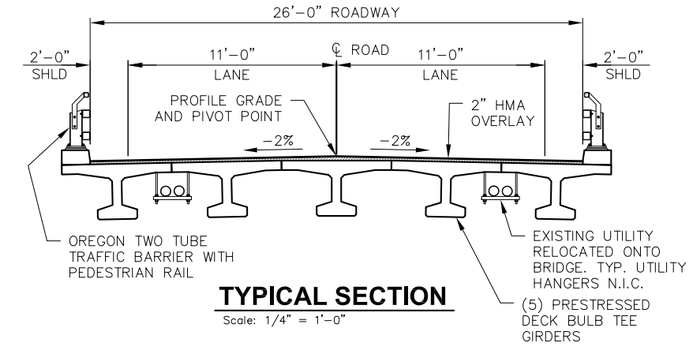

TYPICAL SECTION

Scale: 1/4" = 1'-0"

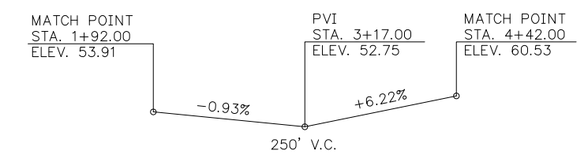

WEST UNCAS ROAD PROFILE

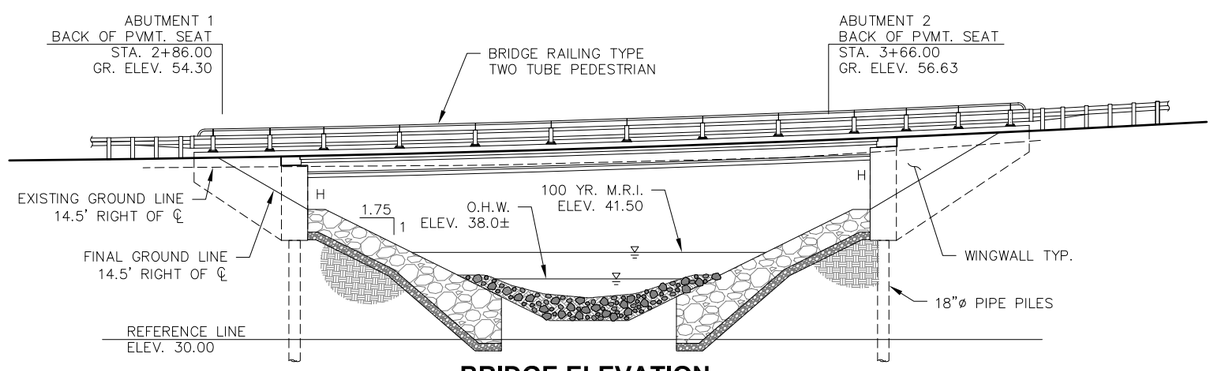

BRIDGE ELEVATION

Scale: 1"=10'-0"

GRADE ELEVATIONS SHOWN ARE FINISH GRADES AT TOP OF CONCRETE DECK ON THE CENTERLINE OF ROAD AND ARE EQUAL TO THE PROFILE GRADE.

BASIS OF BEARING

NAD 83

DATUM

NAVD 88

PRECAST PRESTRESSED GIRDERS (W35DG)
LOADING: HL-93

100% DRAFT DESIGN SET

NO.	REVISION	BY	DATE

DESIGNED: JLP | CHECKED: DRS | PROJECT NO. 1805951934 | SCALE: AS NOTED
DRAWN: JLP | PROJECT ENGR: DRS
APPROVED: _____ CITY ENGINEER | DATE: 8/27/2015

BAR IS ONE INCH ON ORIGINAL DRAWING ADJUST SCALES ACCORDINGLY 0" 1"

Jefferson County
Department of Public Works

SHEARER DESIGN L.L.C.
Bridge Design, Construction Engineering, Infrastructure Aesthetics
3613 Phinney Ave N. # B
Seattle WA 98103
(206) 781-7830
WWW.SHEARERDESIGN.NET

West Uncas Road Culvert Replacement
JEFFERSON COUNTY, WA
LAYOUT

SHEET 7 OF 22
FILE NO. SD-0265

Aug 27, 2015 - 4:18pm joshua \\SHEARERSERVER\Jobs\0265 W Uncas\Design\DWG\0265 Layout.dwg Layout Name: LAYOUT

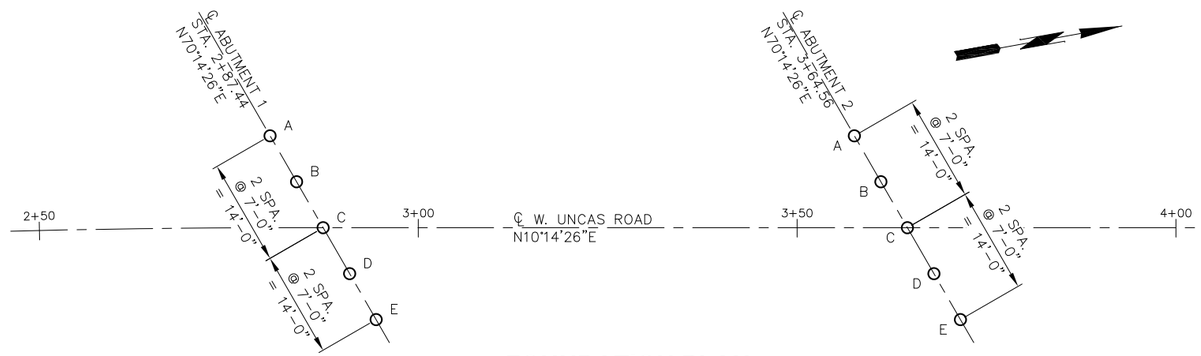

FOUNDATION PLAN

Scale: 1"=10'-0"

PILE DATA TABLE							
LOCATION & PILE ID	PILE TYPE	DRIVING CRITERIA			DESIGN DATA		
		MINIMUM TIP ELEVATION (FT)	ESTIMATED PILE TIP ELEVATION (FT)	DRIVING RESISTANCE (KIP)	STRENGTH I FACTORED LOAD (KIP)	NOMINAL RESISTANCE (KIP)	RESISTANCE FACTOR Φ
ABUTMENT 1 A–E	18"ø x 0.500	17.00	6.00	633	285	633	0.45
ABUTMENT 2 A–E	18"ø x 0.500	17.00	6.00	633	285	633	0.45

NOTES:

1. PILE REINFORCING SHALL EXTEND 18 FT BELOW CAP BEAM.
2. SPIRAL HOOPING REINFORCEMENT SHALL BE PLACED @ 3" CENTERS AROUND THE TOP 10 FEET OF THE MAIN REINFORCEMENT & @ 6" CENTERS AROUND THE REMAINDER OF MAIN REINFORCEMENT. SPIRALS ON UPPER 10 FEET TO BE No. 3 DEFORMED BARS, PLAIN BARS W11 COLD DRAWN OR D11 DEFORMED WIRE. HOOPING ON REMAINDER MAY BE W5 COLD DRAWN WIRE OR D5 DEFORMED WIRE.
3. STEEL PILING ASTM A252 GRADE B WITH ½" WALL THICKNESS
4. PILES SHALL BE DRIVEN WITH A CLOSED SHOE (AS SHOWN), TO MEET MINIMUM TIP ELEVATION REQUIREMENTS.

   CLOSED ENDED FILL ENTIRE LENGTH WITH CLASS 4000P CONCRETE.
5. ALL PILE TIPS CAST STEEL ASTM A27

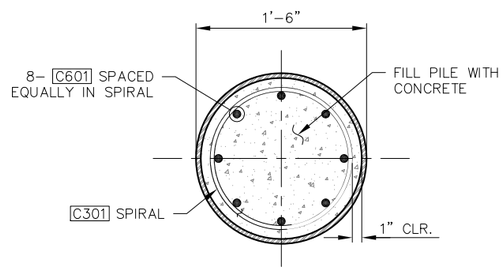

SECTION A

Scale: 1-1/2" = 1'-0"

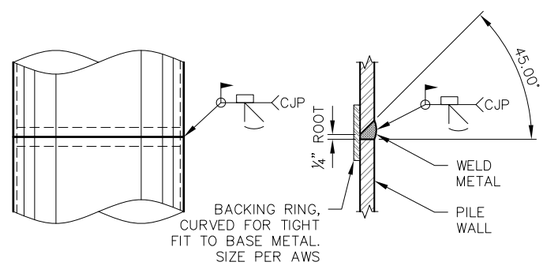

TYPICAL PILE SPLICE DETAIL

Scale: NO SCALE

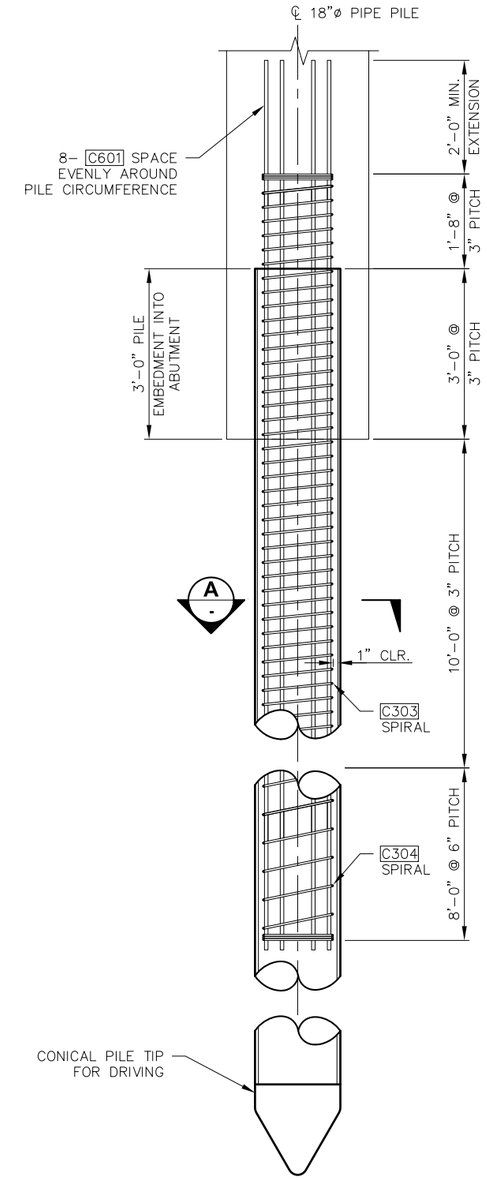

PILE REINFORCING DETAIL

Scale: 3/4" = 1'-0"

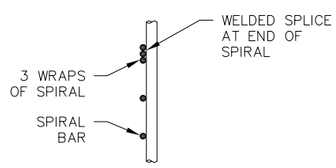

SPIRAL END DETAIL

Scale: NO SCALE

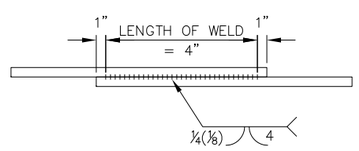

WELDED LAP SPLICE DETAIL

Scale: NO SCALE

FOR SPIRAL AND HOOPS

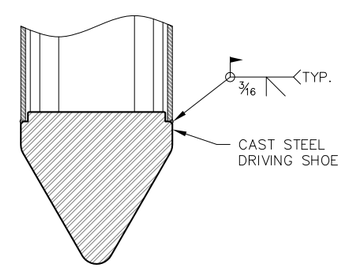

CLOSED SHOE DETAIL

Scale: NO SCALE

100% DRAFT DESIGN SET

NO.	REVISION	BY	DATE

DESIGNED: JLP | CHECKED: DRS | PROJECT NO. 1805951934 | SCALE: AS NOTED
DRAWN: JLP | PROJECT ENGR: DRS
APPROVED: _____ CITY ENGINEER | DATE: 8/27/2015

BAR IS ONE INCH ON ORIGINAL DRAWING ADJUST SCALES ACCORDINGLY 0" 1"

Jefferson County
Department of Public Works

SHEARER DESIGN L.L.C.
Bridge Design, Construction Engineering, Infrastructure Aesthetics
3613 Phinney Ave N, # B
Seattle WA 98103
(206) 781-7830
WWW.SHEARERDESIGN.NET

West Uncas Road Culvert Replacement
JEFFERSON COUNTY, WA
FOUNDATION PLAN

SHEET 8 OF 22
FILE NO. SD-0265

Aug 27, 2015 - 4:18pm joshua \\SHEARERSERVER\Jobs\0265 W Uncas\Design\DWG\0265 Foundation Details.dwg Layout Name: FOUNDATION PLAN

CHANNEL RECONSTRUCTION GENERAL NOTES

- RIPRAP SHALL BE HEAVY LOOSE MEETING THE REQUIREMENTS OF THE WSDOT STANDARD SPECIFICATIONS.
- THE RECONSTRUCTED STREAMBED IS MADE UP OF STREAMBED MATERIAL INSTALLED TO THE LIMITS SHOWN IN THE PLAN VIEW.
- STREAMBED MATERIAL SHALL BE PER TABLE 1.
- THE THALWEG SHALL MEANDER AS SHOWN IN THE LAYOUT AND WILL NOT ALWAYS BE LOCATED IN THE CENTER OF THE CHANNEL. LOW FLOW CHANNEL SIDE SLOPES SHALL VARY FROM THE 10H:1V TO ACCOMMODATE THE MEANDERING THALWEG.
- FOR DETAILS ON THE LARGE WOODY DEBRIS STRUCTURE SEE THE STREAM DETAILS SHEET.

TABLE 1: SEDIMENT GRAIN SIZE DISTRIBUTION FOR CHANNEL RECONSTRUCTION

SIEVE SIZE	OPTIMUM PERCENT PASSING BY WEIGHT
	STREAMBED MATERIAL [1]
12 INCH	99–100
10 INCH	80
5 INCH	60
4 INCH	
3 INCH	
1.5 INCH	
0.75 INCH	20
No 40	5

1. APPROXIMATELY 5 PARTS WSDOT 12" COBBLES AND 3 PARTS WSDOT STREAMBED SEDIMENT.

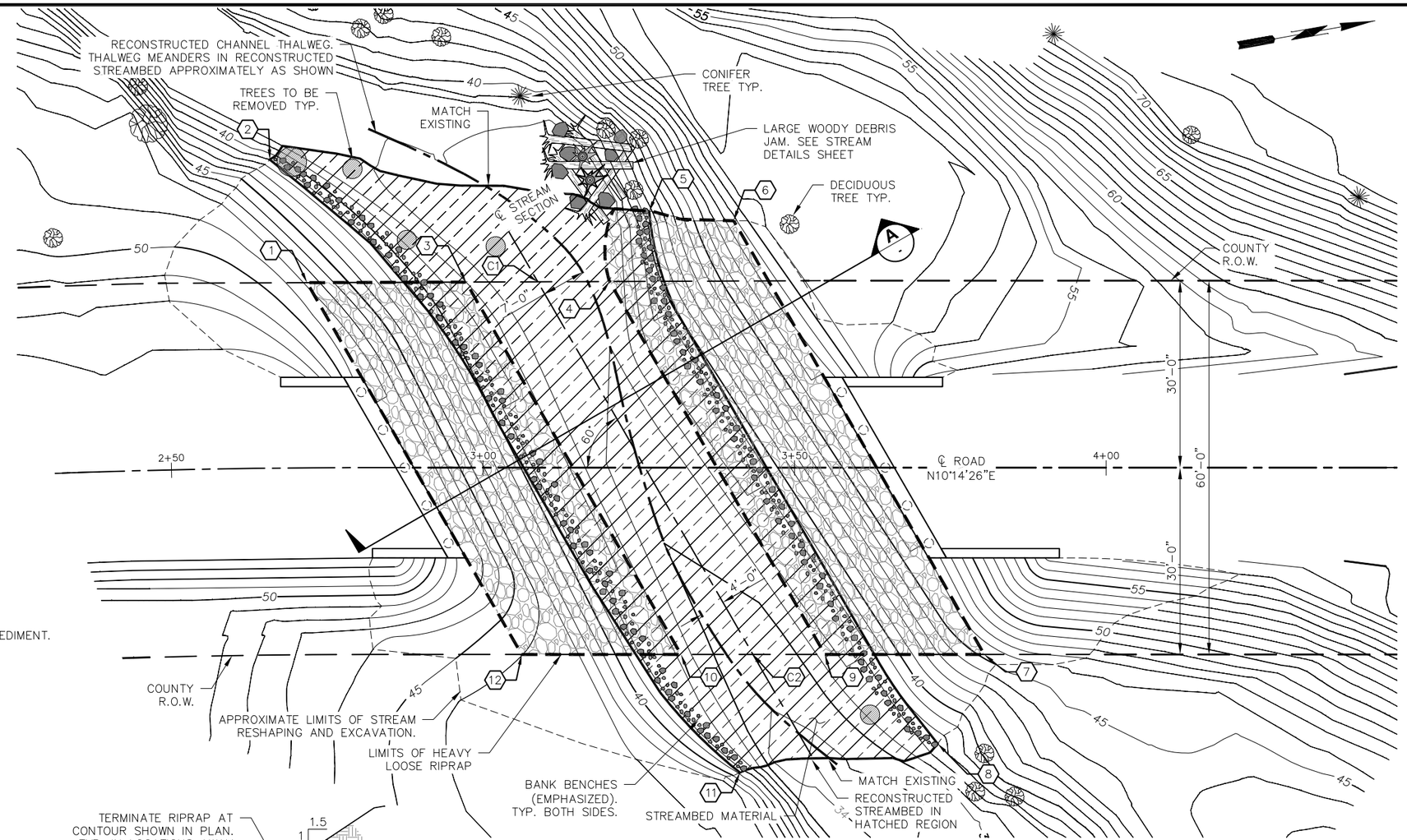

RIPRAP & STREAMBED LAYOUT

Scale: 1"=10'-0"

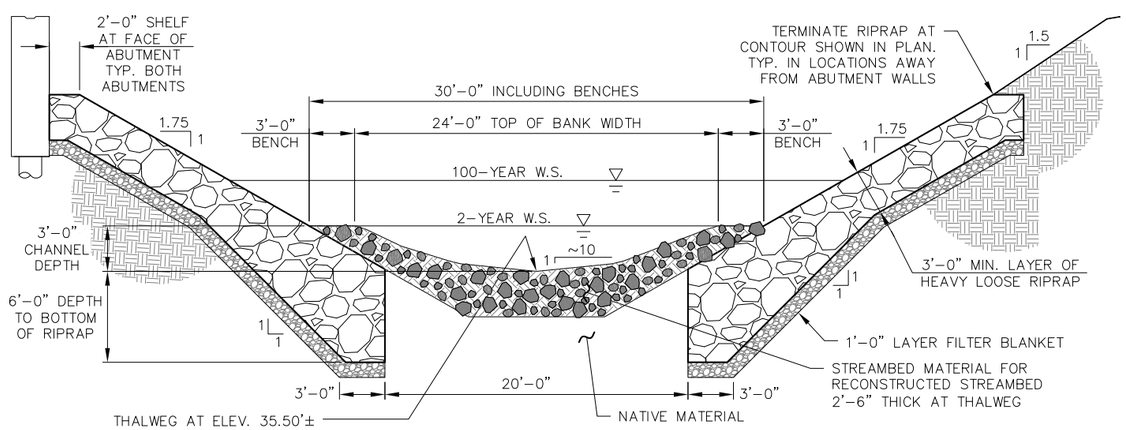

TYPICAL STREAM SECTION A

Scale: 1"=5'-0"

CHANNEL RECONSTRUCTION CONTROL POINTS

LABEL	NORTHING	EASTING	ELEV.	DESCRIPTION
C1	364381.22	1135140.91	36.40	CENTERLINE RIPRAP SECTION
C2	364404.58	1135205.93	34.40	CENTERLINE RIPRAP SECTION
1	364344.75	1135134.47	47.80	HEAVY LOOSE RIPRAP CORNER
2	364342.39	1135113.98	41.00	RECONSTRUCTED STREAMBED CORNER
3	364369.88	1135138.91	38.00	HEAVY LOOSE RIPRAP CORNER
4	364392.56	1135142.92	36.80	HEAVY LOOSE RIPRAP CORNER
5	364400.84	1135132.97	40.75	RECONSTRUCTED STREAMBED CORNER
6	364413.92	1135136.87	48.70	HEAVY LOOSE RIPRAP CORNER
7	364441.10	1135212.53	45.30	HEAVY LOOSE RIPRAP CORNER
8	364431.20	1135225.31	37.50	RECONSTRUCTED STREAMBED CORNER
9	364415.94	1135207.98	36.40	HEAVY LOOSE RIPRAP CORNER
10	364393.21	1135203.87	36.70	HEAVY LOOSE RIPRAP CORNER
11	364399.14	1135224.21	38.90	RECONSTRUCTED STREAMBED CORNER
12	364368.05	1135199.33	44.00	HEAVY LOOSE RIPRAP CORNER

ELEVATIONS ARE GIVEN AT TOP OF FINISHED GROUND.

LAYOUT KEY

RIPRAP LIMITS

RECONSTRUCTED STREAMBED LIMITS

100% DRAFT DESIGN SET

NO.	REVISION	BY	DATE

DESIGNED: JLP | CHECKED: DRS | PROJECT NO. 1805951934 | SCALE: AS NOTED
DRAWN: JLP | PROJECT ENGR: DRS
APPROVED: _____ CITY ENGINEER | DATE: 8/27/2015

BAR IS ONE INCH ON ORIGINAL DRAWING ADJUST SCALES ACCORDINGLY 0" 1"

Jefferson County
Department of Public Works

SHEARER DESIGN L.L.C.
Bridge Design, Construction Engineering, Infrastructure Aesthetics
3613 Phinney Ave N. # B
Seattle WA 98103
(206) 781-7830
WWW.SHEARERDESIGN.NET

West Uncas Road Culvert Replacement
JEFFERSON COUNTY, WA
RIPRAP AND CHANNEL LAYOUT

SHEET 9 OF 22
FILE NO. SD-0265

Aug 27, 2015 - 4:18pm joshua \\SHEARERSERVER\Jobs\0265 W Uncas\Design\DWG\0265 Riprap Layout.dwg Layout Name:RIPRAP AND CHANNEL LAYOUT

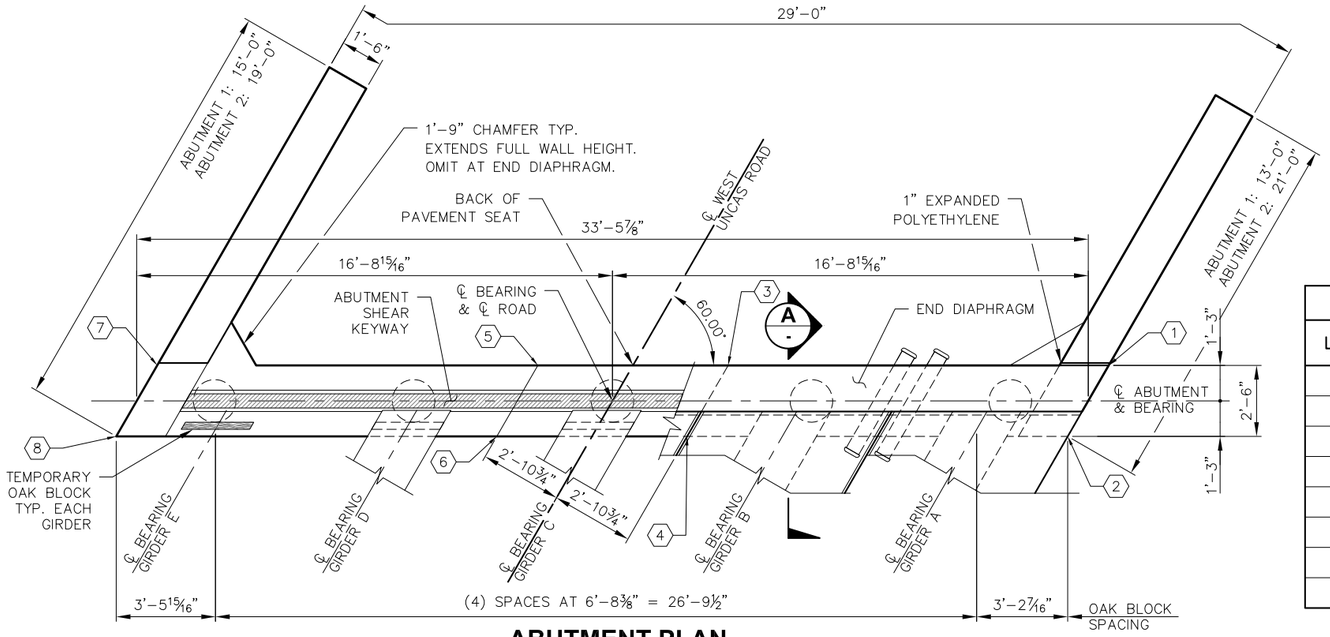

ABUTMENT PLAN

Scale: 3/8" = 1'-0"

ABUTMENT 1 SHOWN, ABUTMENT 2 SIMILAR

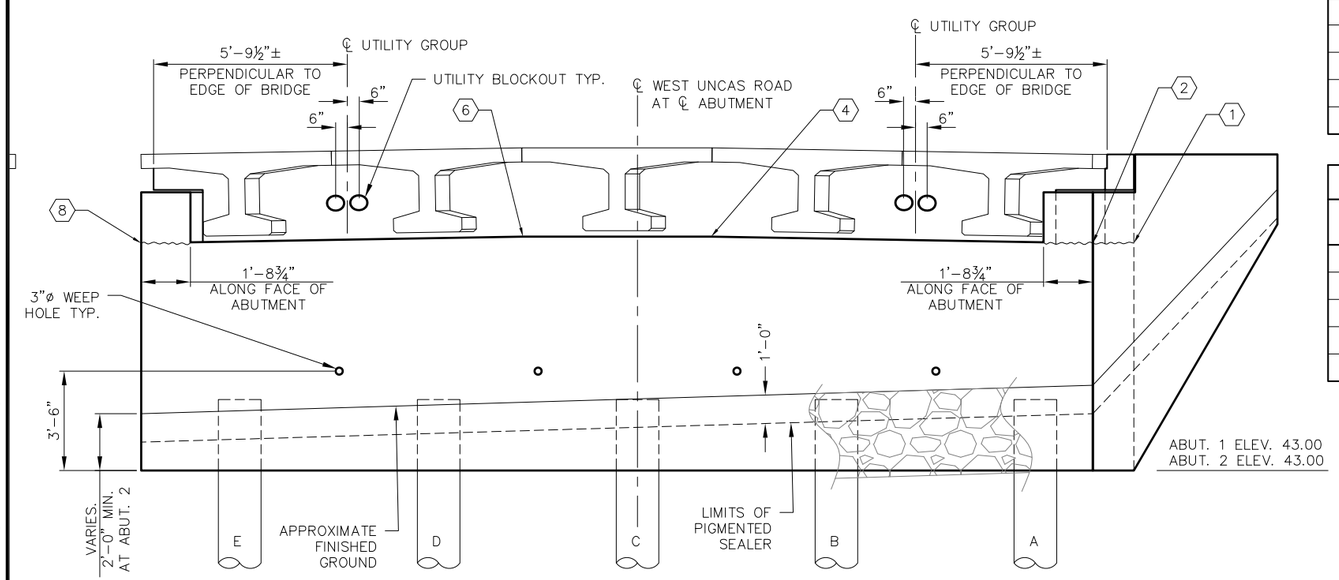

ABUTMENT ELEVATION

Scale: 3/8" = 1'-0"

ABUTMENT 1 SHOWN, LOOKING BACK ON STATIONING.
ABUTMENT 2 SIMILAR

ABUTMENT CONTROL

LOCATION	ABUTMENT 1 ELEVATION	ABUTMENT 2 ELEVATION
1	50.58	53.39
2	50.63	53.27
3	50.92	53.34
4	50.97	53.23
5	50.98	53.21
6	51.04	53.09
7	50.88	52.71
8	50.94	52.61

GIRDER BLOCKING

GIRDER	ABUTMENT 1 ELEVATION	ABUTMENT 2 ELEVATION
A	50.91	52.95
B	51.09	53.20
C	51.26	53.44
D	51.21	53.46
E	51.16	53.48

PILE CUTOFF

PILE	ABUTMENT 1 ELEVATION	ABUTMENT 2 ELEVATION
A	46.00	46.00
B	46.00	46.00
C	46.00	46.00
D	46.00	46.00
E	46.00	46.00

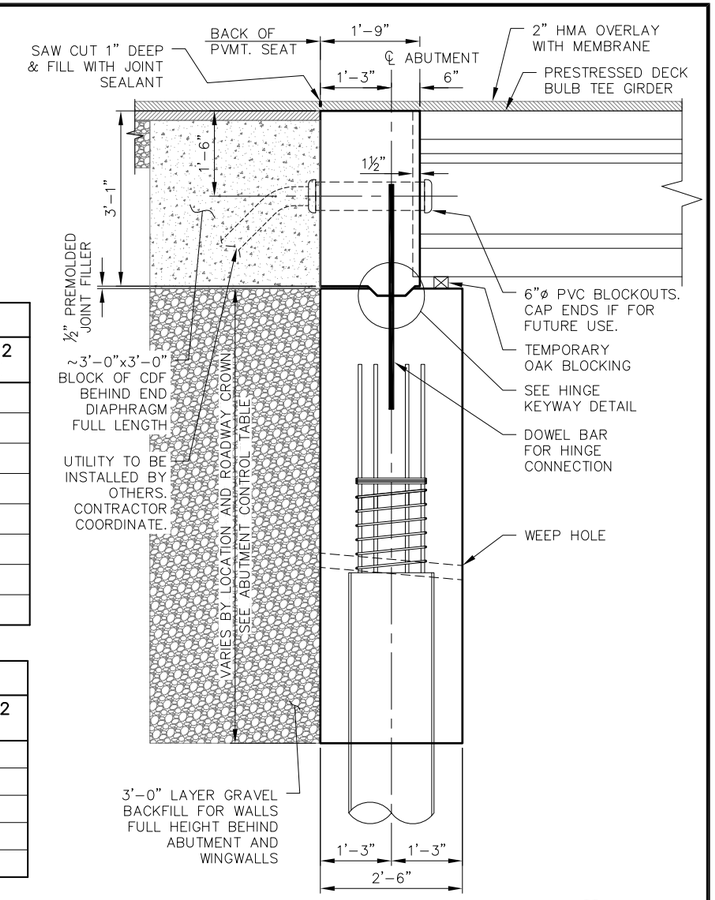

TYPICAL ABUTMENT SECTION A

Scale: 3/4" = 1'-0"

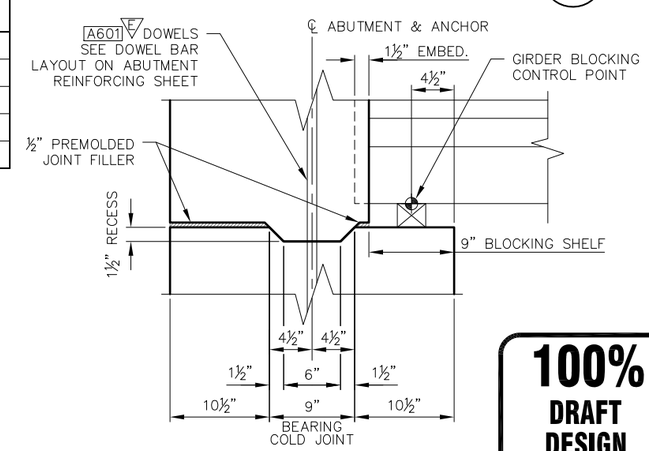

HINGE KEYWAY DETAIL

Scale: 1-1/2" = 1'-0"

100% DRAFT DESIGN SET

NO.	REVISION	BY	DATE

DESIGNED: JLP | CHECKED: DRS | PROJECT NO. 1805951934 | SCALE: AS NOTED
DRAWN: JLP | PROJECT ENGR: DRS
APPROVED: _____ CITY ENGINEER | DATE: 8/27/2015
BAR IS ONE INCH ON ORIGINAL DRAWING ADJUST SCALES ACCORDINGLY 0" 1"

Jefferson County
Department of Public Works

SHEARER DESIGN L.L.C.
Bridge Design, Construction Engineering, Infrastructure Aesthetics
3613 Phinney Ave N. # B
Seattle WA 98103
(206) 781-7830
WWW.SHEARERDESIGN.NET

West Uncas Road Culvert Replacement
JEFFERSON COUNTY, WA
ABUTMENT DETAILS

SHEET 10 OF 22
FILE NO. SD-0265

Aug 27, 2015 - 4:18pm jpshua \\SHEARERSERVER\Jobs\0265 W Uncas\Design\DWGS\0265 Abutment Details.dwg Layout Name: ABUTMENT DETAILS

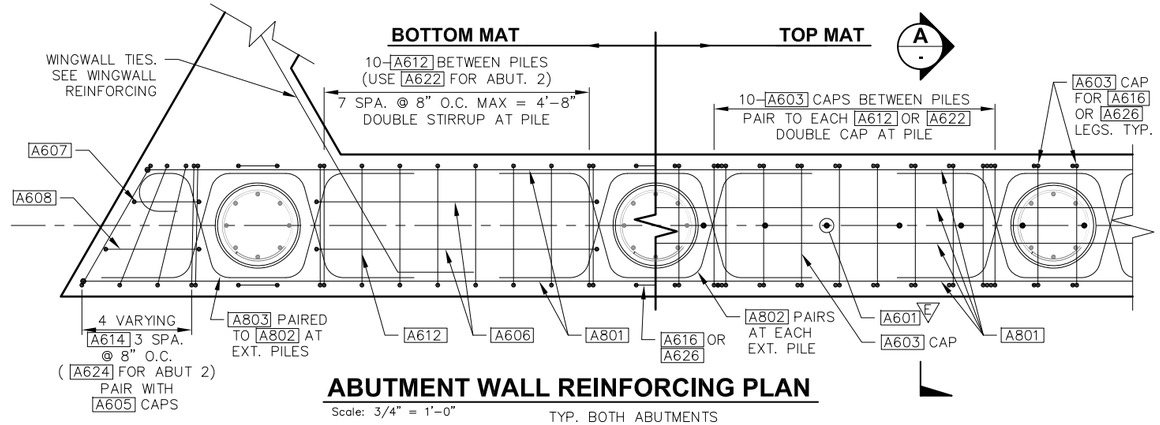

ABUTMENT WALL REINFORCING PLAN

Scale: 3/4" = 1'-0"

TYP. BOTH ABUTMENTS

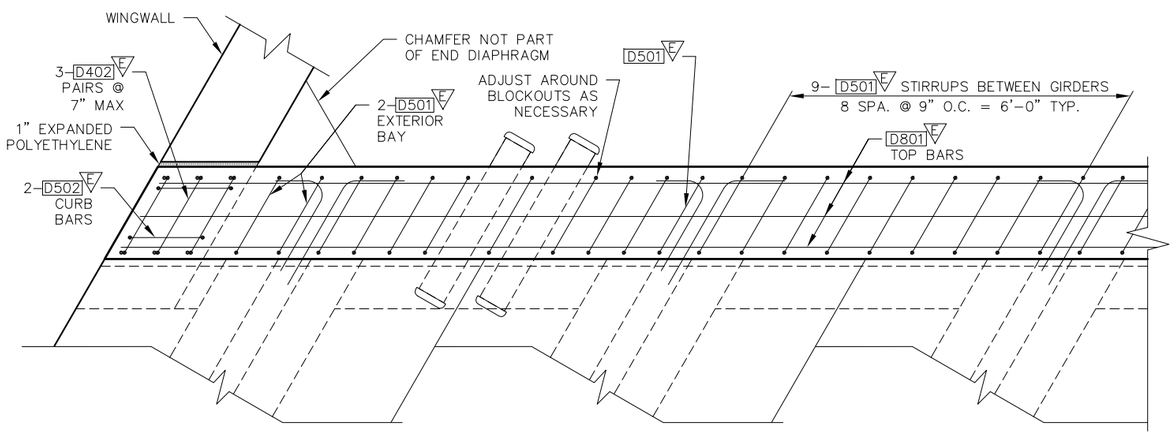

END DIAPHRAGM REINFORCING PLAN

Scale: 3/4" = 1'-0"

TYP. BOTH ABUTMENTS

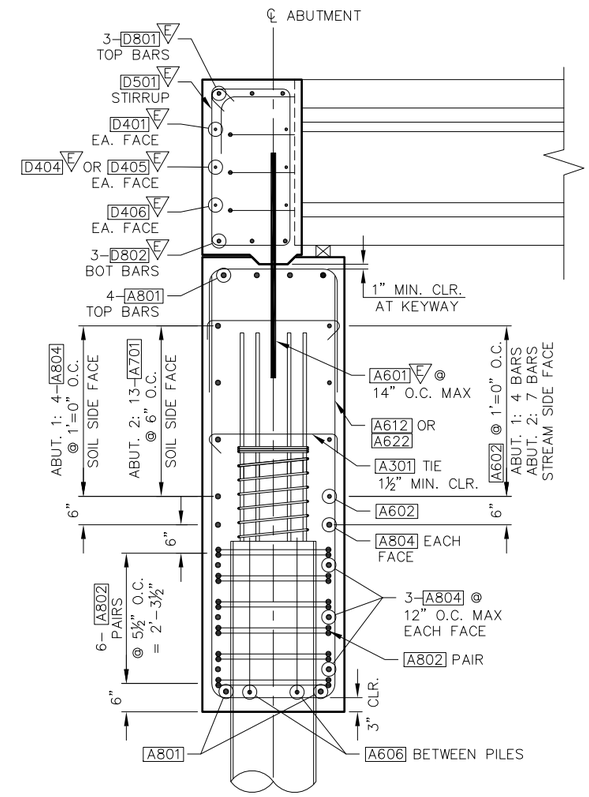

ABUTMENT REINFORCING SECTION

A
-

Scale: 3/4" = 1'-0"

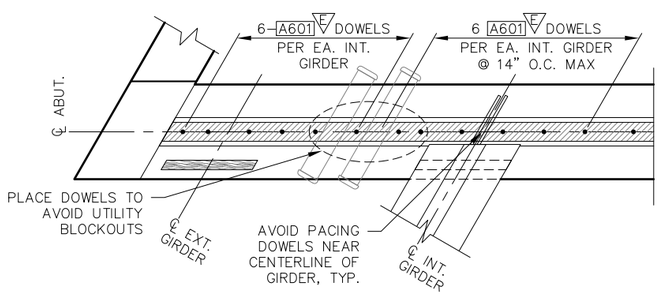

ABUTMENT DOWEL BAR LAYOUT

Scale: 1/2" = 1'-0"

TYP. BOTH ABUTMENTS

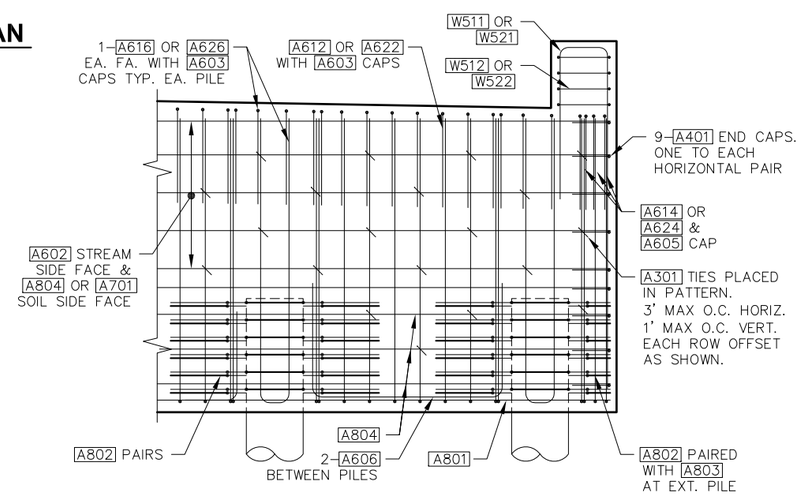

ABUTMENT REINFORCING ELEVATION

Scale: 1/2" = 1'-0"

TYP. BOTH ABUTMENTS

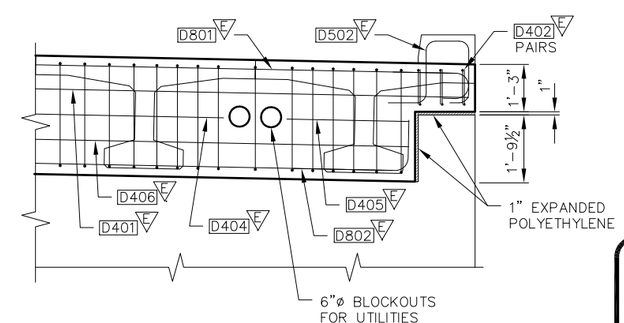

END DIAPHRAGM REINFORCING ELEVATION

Scale: 1/2" = 1'-0"

100% DRAFT DESIGN SET

NO.	REVISION	BY	DATE

DESIGNED: JLP | CHECKED: DRS | PROJECT NO. 1805951934 | SCALE: AS NOTED
DRAWN: JLP | PROJECT ENGR: DRS
APPROVED: _____ CITY ENGINEER | DATE: 8/27/2015

BAR IS ONE INCH ON ORIGINAL DRAWING ADJUST SCALES ACCORDINGLY 0" 1"

Jefferson County
Department of Public Works

SHEARER DESIGN L.L.C.
Bridge Design, Construction Engineering, Infrastructure Aesthetics
3613 Phinney Ave N, # B
Seattle WA 98103
(206) 781-7830
WWW.SHEARERDESIGN.NET

West Uncas Road Culvert Replacement
JEFFERSON COUNTY, WA
ABUTMENT REINFORCING

SHEET 11 OF 22
FILE NO. SD-0265

Aug 27, 2015 - 4:18pm joshua \\SHEARERSERVER\Jobs\0265 W Uncas\Design\DWG\0265 Abutment Details.dwg Layout Name: ABUTMENT REINFORCING

WINGWALL CONTROL TABLE

WINGWALL	ELEV. A	ELEV. B	ELEV. C	ELEV. D	ELEV. E
ABUT. 1 LEFT	53.57	53.71	52.37	52.42	49.74
ABUT. 1 RIGHT	53.78	54.00	52.67	52.73	51.08
ABUT. 2 LEFT	56.49	55.84	54.51	54.40	53.74
ABUT. 2 RIGHT	57.34	56.52	55.18	55.06	55.08

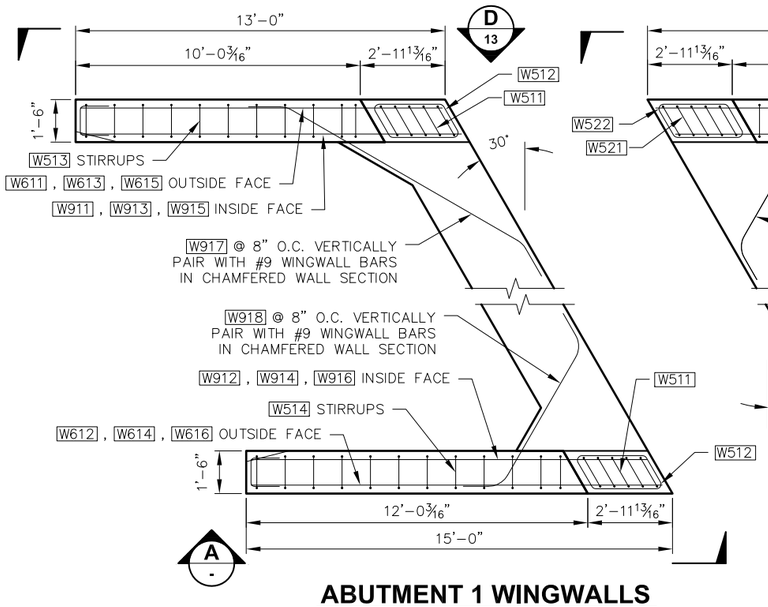

ABUTMENT 1 WINGWALLS

Scale: 3/8" = 1'-0"

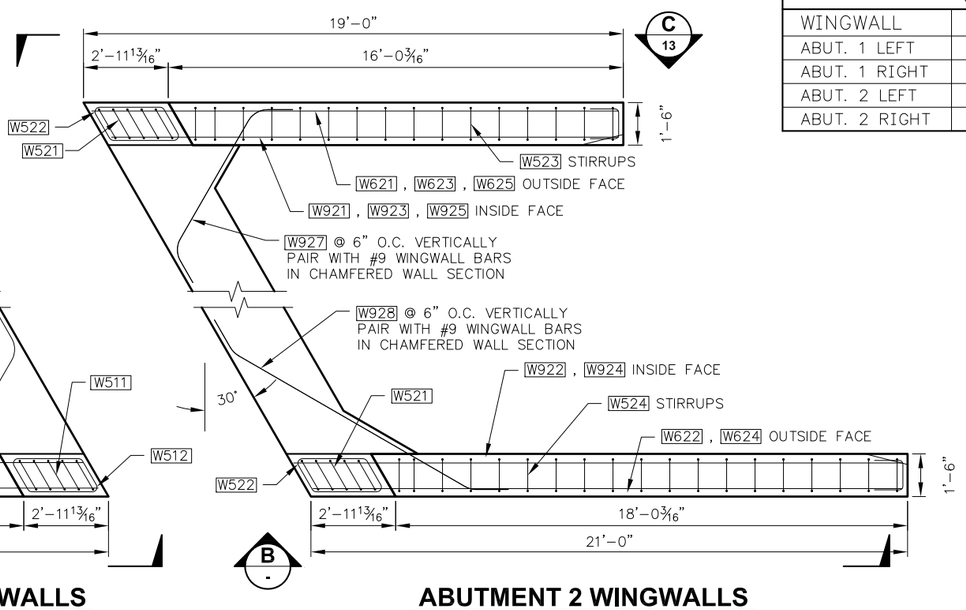

ABUTMENT 2 WINGWALLS

Scale: 3/8" = 1'-0"

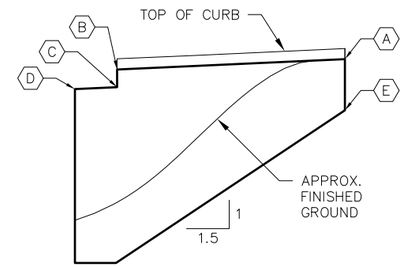

WINGWALL CONTROL

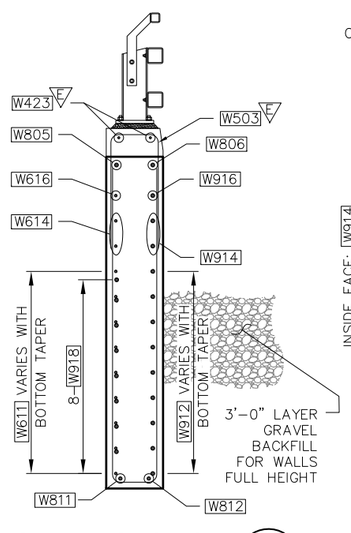

WINGWALL SECTION E -

Scale: 1/2" = 1'-0"

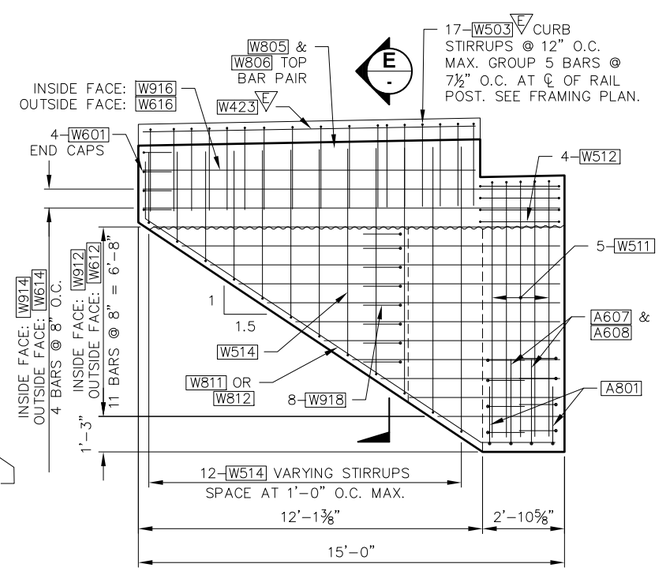

ABUT. 1 RIGHT WINGWALL VIEW A -

Scale: 3/8" = 1'-0"

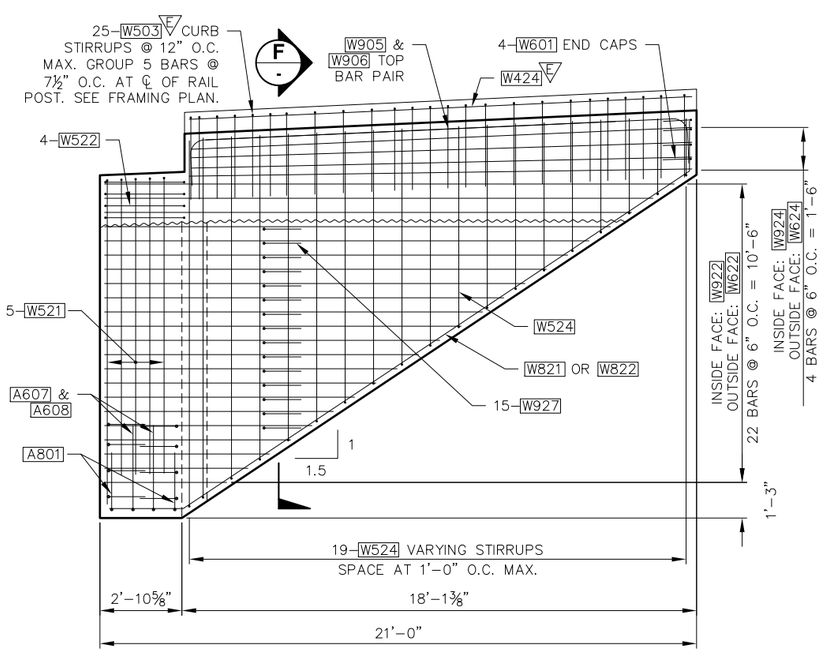

ABUT. 2 RIGHT WINGWALL VIEW B -

Scale: 3/8" = 1'-0"

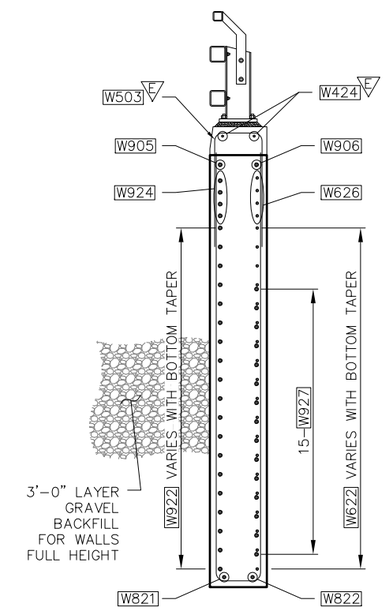

WINGWALL SECTION F -

Scale: 1/2" = 1'-0"

100% DRAFT DESIGN SET

NO.	REVISION	BY	DATE

DESIGNED: JLP | CHECKED: DRS | PROJECT NO. 1805951934 | SCALE: AS NOTED
DRAWN: JLP | PROJECT ENGR: DRS
APPROVED: _____ CITY ENGINEER | DATE: 8/27/2015

BAR IS ONE INCH ON ORIGINAL DRAWING ADJUST SCALES ACCORDINGLY 0" 1"

Jefferson County Department of Public Works

SHEARER DESIGN L.L.C. — Bridge Design, Construction Engineering, Infrastructure Aesthetics
3613 Phinney Ave N, # B Seattle WA 98103 (206) 781-7830 WWW.SHEARERDESIGN.NET

West Uncas Road Culvert Replacement
JEFFERSON COUNTY, WA
WINGWALL DETAILS

SHEET 12 OF 22
FILE NO. SD-0265

Aug 27, 2015 - 4:18pm Joshua \\SHEARERSERVER\Jobs\0265 W Uncas\Design\DWG\0265 Abutment Details.dwg Layout Name: WINGWALL DETAILS

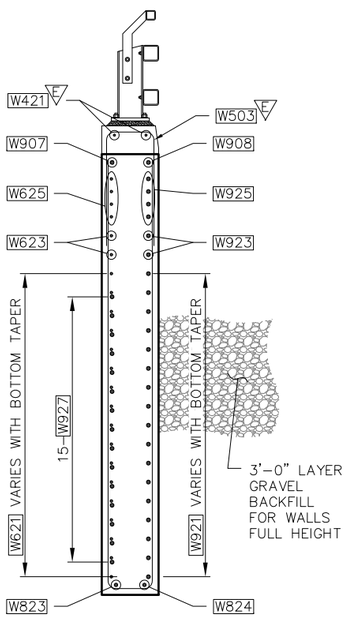

WINGWALL SECTION G/-

Scale: 1/2" = 1'-0"

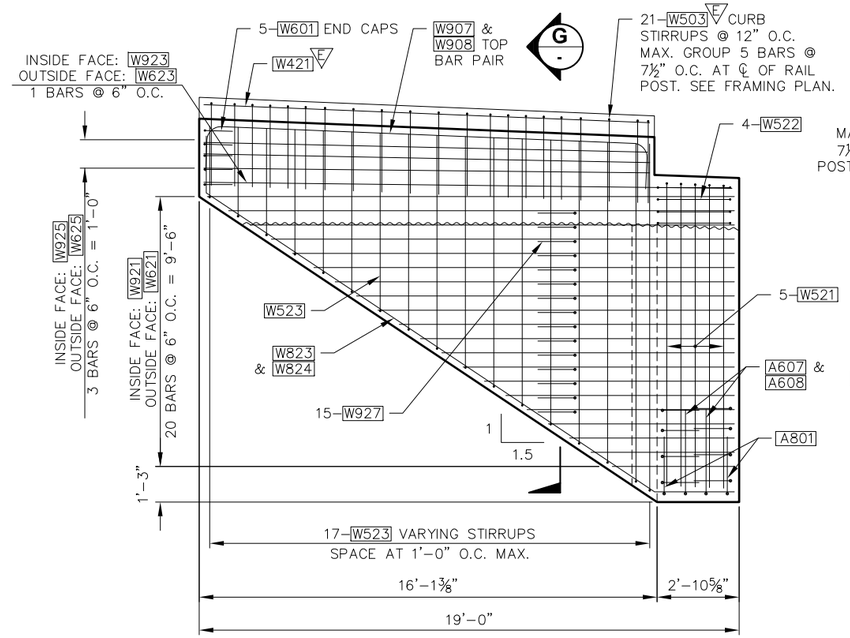

ABUT. 2 LEFT WINGWALL VIEW C/12

Scale: 3/8" = 1'-0"

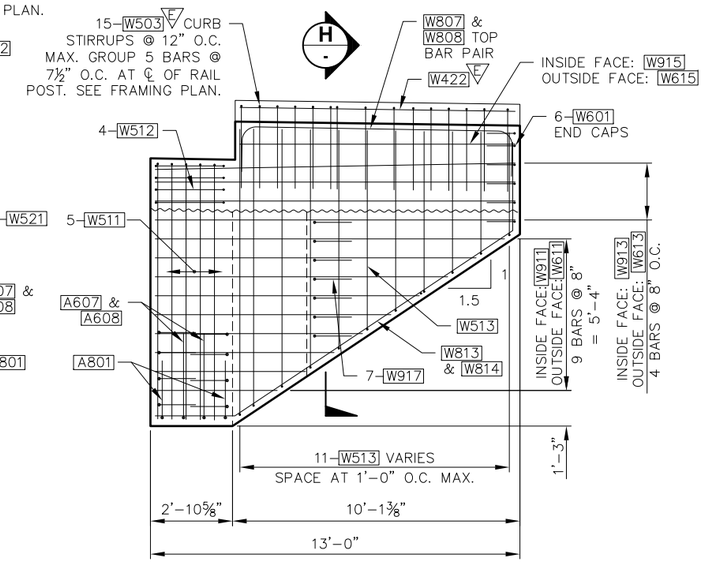

ABUT. 1 LEFT WINGWALL VIEW D/12

Scale: 3/8" = 1'-0"

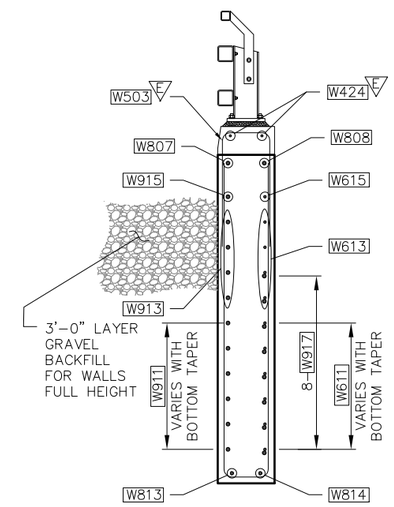

WINGWALL SECTION H/-

Scale: 1/2" = 1'-0"

100% DRAFT DESIGN SET

Aug 27, 2015 - 4:18pm joshua \\SHEARERSERVER\Jobs\0265 W Uncas\Design\DWG\0265 Abutment Details.dwg Layout Name: WINGWALL DETAILS II

NO.	REVISION	BY	DATE

DESIGNED: JLP | CHECKED: DRS | PROJECT NO. 1805951934 | SCALE: AS NOTED
DRAWN: JLP | PROJECT ENGR: DRS
APPROVED: _____ CITY ENGINEER | DATE: 8/27/2015
BAR IS ONE INCH ON ORIGINAL DRAWING ADJUST SCALES ACCORDINGLY 0" 1"

Jefferson County
Department of Public Works

SHEARER DESIGN L.L.C.
Bridge Design, Construction Engineering, Infrastructure Aesthetics
3613 Phinney Ave N. # B
Seattle WA 98103
(206) 781-7830
WWW.SHEARERDESIGN.NET

West Uncas Road Culvert Replacement
JEFFERSON COUNTY, WA
WINGWALL DETAILS II

SHEET 13 OF 22
FILE NO. SD-0265

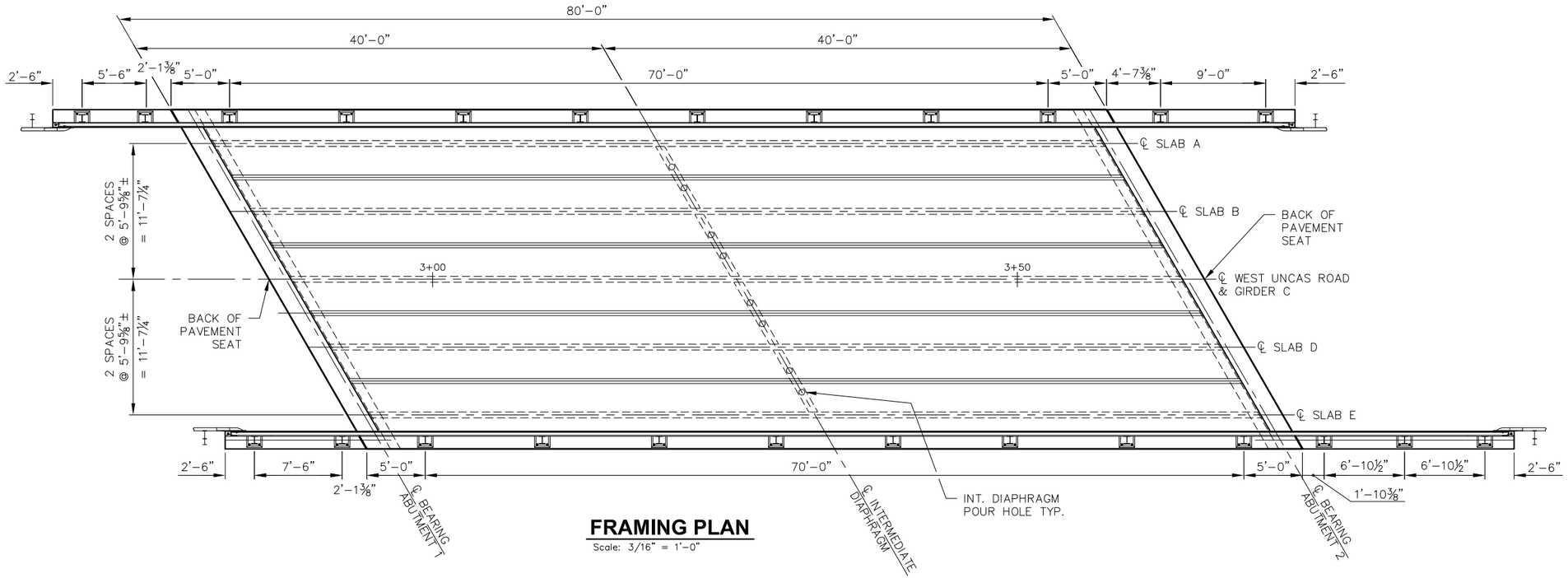

FRAMING PLAN

Scale: 3/16" = 1'-0"

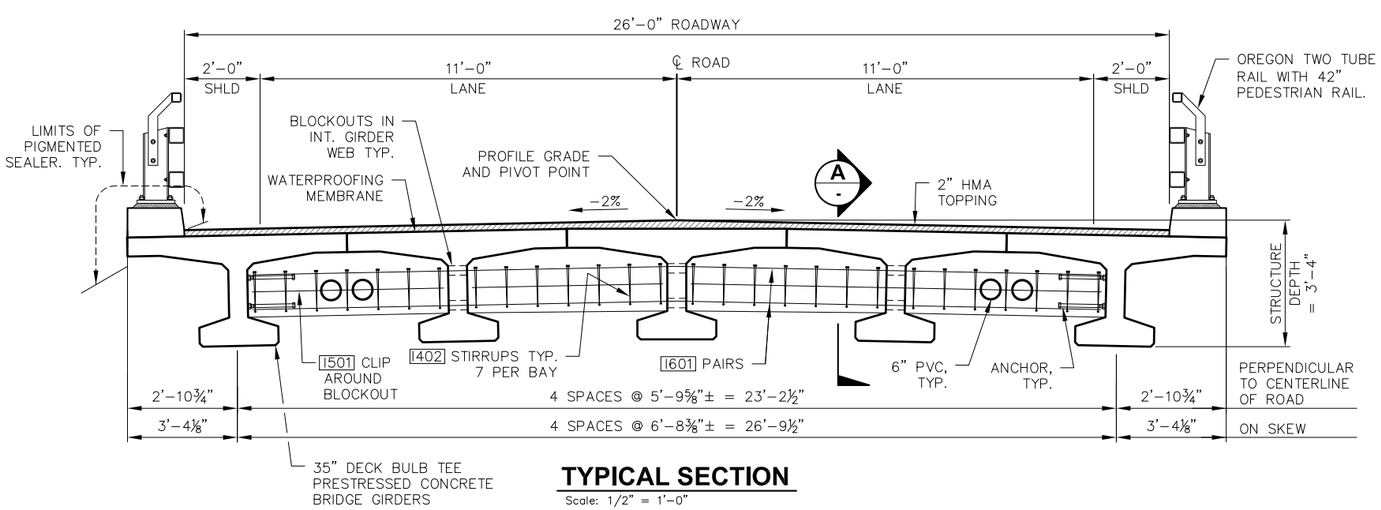

TYPICAL SECTION

Scale: 1/2" = 1'-0"

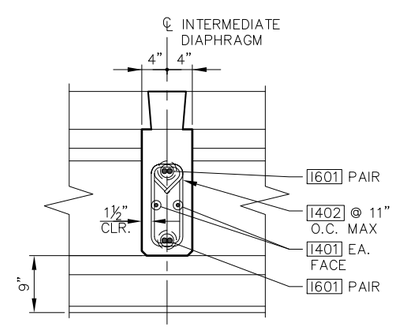

SECTION A

Scale: 1" = 1'-0"

SECTION DRAWN PERPENDICULAR TO DIAPHRAGM FACE

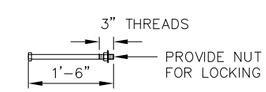

1"ø ASTM A307 GALVANIZED
(2) EACH EXTERIOR GIRDER (4) TOTAL

ANCHOR DETAIL

Scale: 3/4" = 1'-0"

100% DRAFT DESIGN SET

NO.	REVISION	BY	DATE

DESIGNED: JLP | CHECKED: DRS | PROJECT NO. 1805951934
DRAWN: JLP | PROJECT ENGR: DRS
APPROVED: _____ CITY ENGINEER
SCALE: AS NOTED
DATE: 8/27/2015
BAR IS ONE INCH ON ORIGINAL DRAWING ADJUST SCALES ACCORDINGLY 0" 1"

Jefferson County
Department of Public Works

SHEARER DESIGN LLC.
Bridge Design, Construction Engineering, Infrastructure Aesthetics
3613 Phinney Ave N, # B
Seattle WA 98103
(206) 781-7830
WWW.SHEARERDESIGN.NET

West Uncas Road Culvert Replacement
JEFFERSON COUNTY, WA
FRAMING PLAN & TYPICAL SECTION

SHEET 14 OF 22
FILE NO. SD-0265

Aug 27, 2015 - 4:18pm jpshua \\SHEARERSERVER\Jobs\0265 W Uncas\Design\DWG\0265 Framing Plan.dwg Layout Name: FRAMING PLAN & TYPICAL SECTION

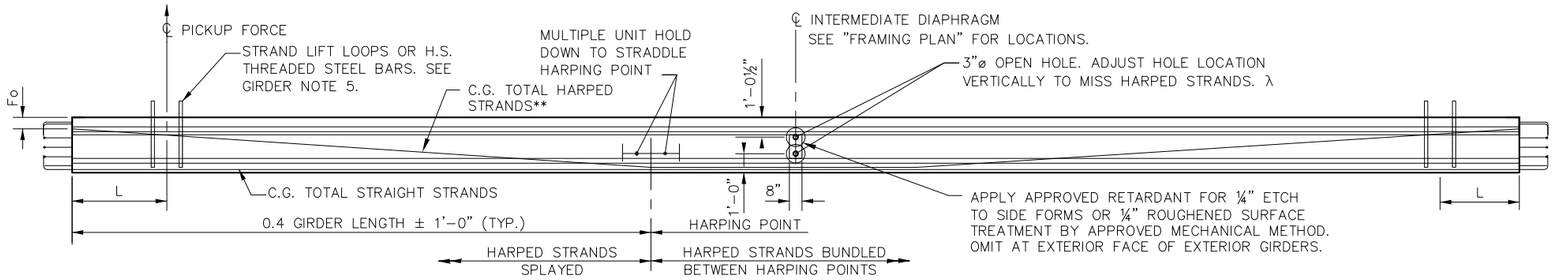

GIRDER ELEVATION

** 8 : 1 MAXIMUM SLOPE FOR EACH HARPED STRAND

λ SEE GIRDER NOTE 9.

▽ DENOTES EPOXY COATED

BENDING DIAGRAM (ALL DIMENSIONS ARE OUT TO OUT)

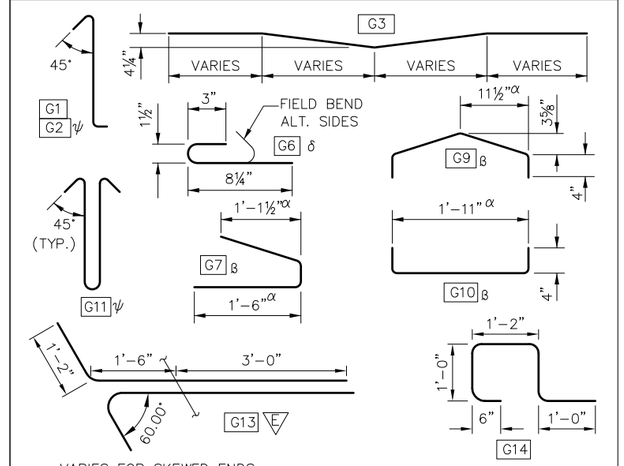

α – VARIES FOR SKEWED ENDS.
δ – #3 OR #4 MAY BE SUBSTITUTED. FIELD BENDING IS OPTIONAL.
β – PAIRS OF G7 BARS, OR G9 AND G10 BARS, MAY BE USED INTERCHANGEABLY AS BOTTOM FLANGE TIES.
ψ – 1 G11 MAY BE SUBSTITUTED FOR 2 G2 WITHIN THE V1 SPA. @ V2.

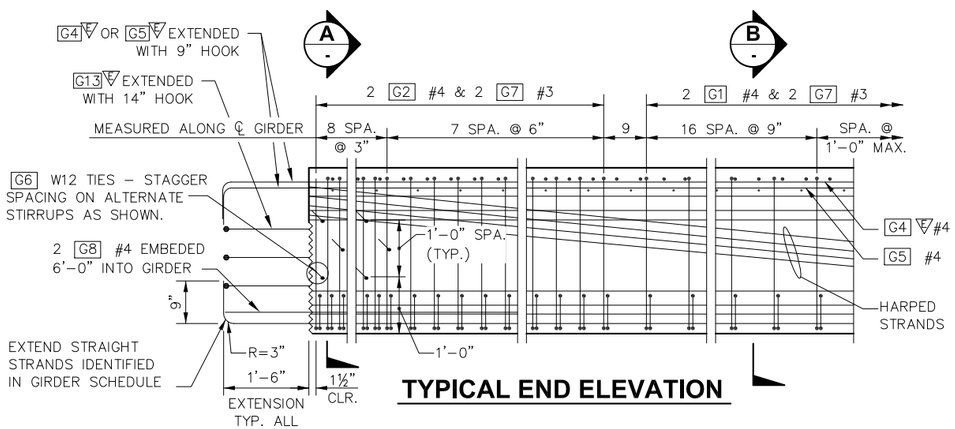

TYPICAL END ELEVATION

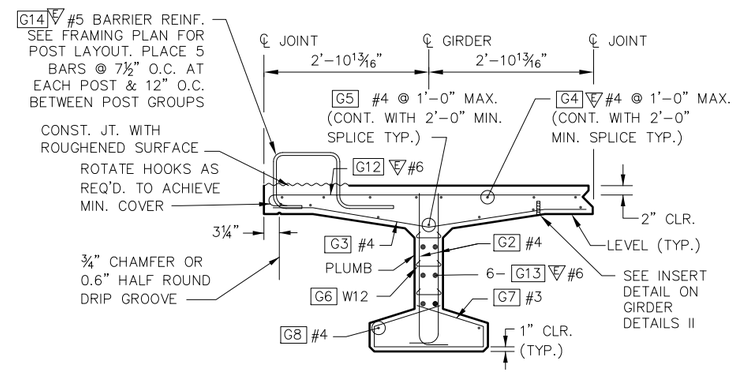

SECTION A

EXT. GIRDER SHOWN
INT. GIRDER SIMILAR

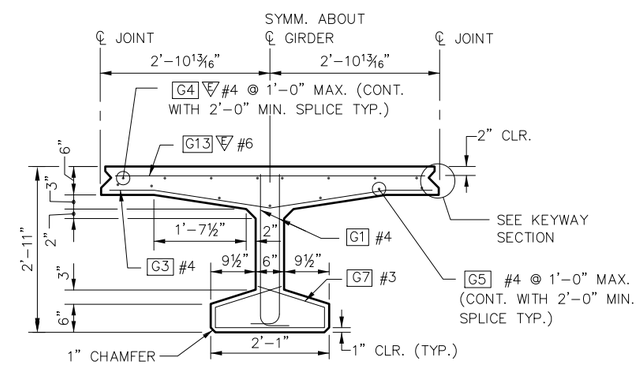

SECTION B

INT. GIRDER SHOWN
EXT. GIRDER SIMILAR

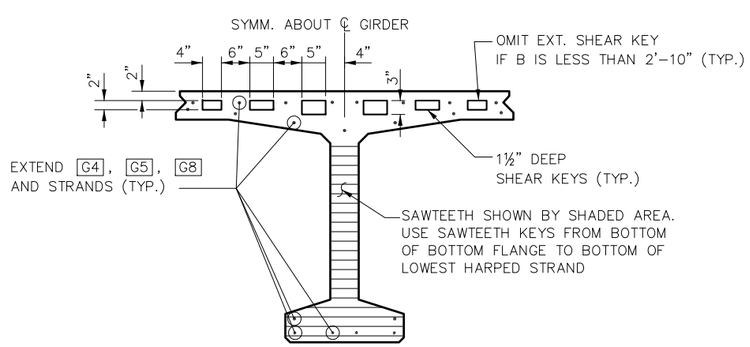

TYPICAL END ELEVATION

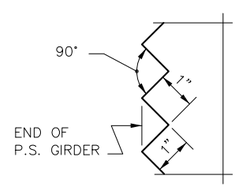

SAWTEETH DETAIL

SAWTEETH ARE FULL WIDTH

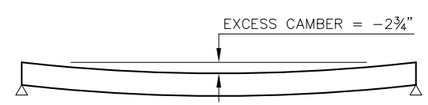

PRECAMBER DETAIL

Scale: 3/8" = 1'-0"

* NATURAL CAMBER (Dn) REPRESENTS THE EXPECTED CAMBER IF FORM DEFLECTION WAS NOT USED. FORM DEFLECTION SHALL BE EMPLOYED TO ACHIEVE THE DESIRED NEGATIVE CAMBER TO FIT SAG VERTICAL CURVE.

SPAN	GIRDER	L	Θ1 (DEG.)	Θ2 (DEG.)	PLAN LENGTH (ALONG GIRDER GRADE)	MIN. CONC. COMP. STRENGTH		HARPED		STRAIGHT		LOCATION OF C.G. STRANDS				* NATURAL CAMBER	DESIRED DEFLECTED CAMBER	SCREED CAMBER	EXCESS CAMBER
						@ FINAL F'C (KSI)	@ RELEASE F'CI (KSI)	NO. OF STRANDS	JACKING FORCE (KIPS)	NO. OF STRANDS	JACKING FORCE (KIPS)	E	F℄	Fb	Fo	Dn @ 120	D @ 120	C	△
1	EXT	1'–9"	60	60	76'–3⅜"	6.8	5.6	7	307	16	703	2.75	4.00	4.00	6.57	3.49	–2.60	0.15	–2.75
1	INT	1'–9"	60	60	76'–3⅜"	6.8	5.6	7	307	16	703	2.75	4.00	4.00	6.57	3.49	–2.60	0.15	–2.75

100% DRAFT DESIGN SET

NO.	REVISION	BY	DATE

DESIGNED: JLP | CHECKED: DRS | PROJECT NO. 1805951934
DRAWN: JLP | PROJECT ENGR: DRS
APPROVED: _____ CITY ENGINEER | DATE: 8/27/2015
SCALE: AS NOTED
BAR IS ONE INCH ON ORIGINAL DRAWING ADJUST SCALES ACCORDINGLY 0" 1"

Jefferson County
Department of Public Works

SHEARER DESIGN L.L.C.
Bridge Design, Construction Engineering, Infrastructure Aesthetics
3613 Phinney Ave N. # B
Seattle WA 98103
(206) 781-7830
WWW.SHEARERDESIGN.NET

West Uncas Road Culvert Replacement
JEFFERSON COUNTY, WA
GIRDER DETAILS

SHEET 15 OF 22
FILE NO. SD–0265

Aug 27, 2015 - 4:18pm joshua \\SHEARERSERVER\Jobs\0265 W Uncas\Design\DWG\0265 Girder Details.dwg Layout Name: GIRDER DETAILS

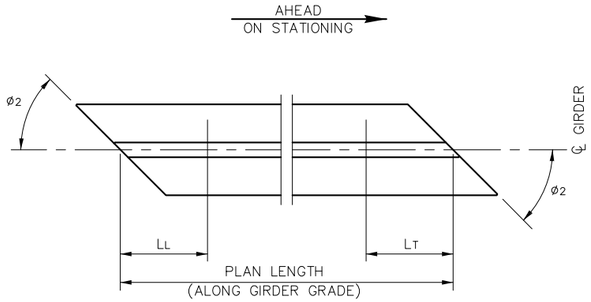

GIRDER SCHEDULE LEGEND

LL AND LT ARE SHIPPING SUPPORT LOCATIONS AT LEADING AND TRAILING ENDS, RESPECTIVELY.

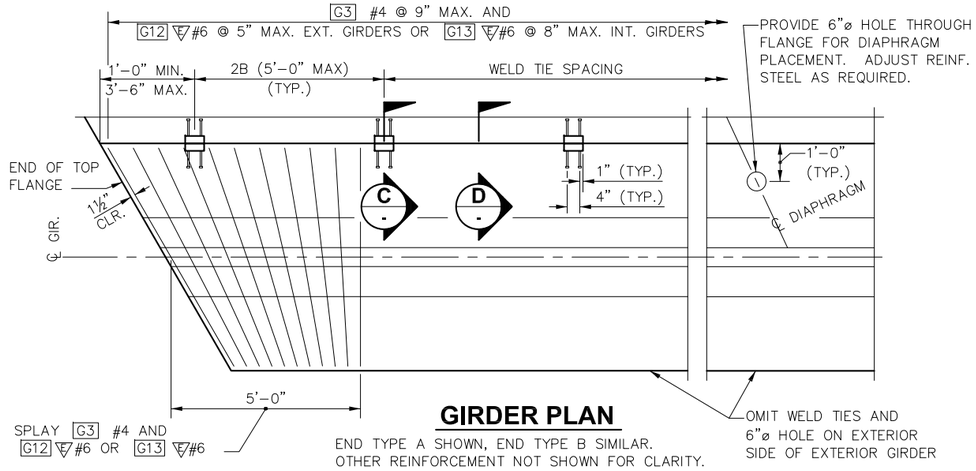

GIRDER PLAN

END TYPE A SHOWN, END TYPE B SIMILAR.
OTHER REINFORCEMENT NOT SHOWN FOR CLARITY.

GIRDER NOTES

1. PLAN LENGTH SHALL BE INCREASED AS NECESSARY TO COMPENSATE FOR SHORTENING DUE TO PRESTRESS AND SHRINKAGE.
2. ALL PRETENSIONED AND TEMPORARY STRANDS SHALL BE 0.6"ø AASHTO M203 GRADE 270 LOW RELAXATION STRANDS, JACKED TO 202.5 KSI.
3. CUT ALL STRANDS FLUSH WITH THE GIRDER ENDS AND PAINT WITH AN APPROVED EPOXY RESIN, EXCEPT FOR EXTENDED STRANDS AS SHOWN.
4. THE TOP SURFACE OF THE GIRDER FLANGE SHALL BE ROUGHENED IN ACCORDANCE WITH SECTION 6-02.3(25)H OF THE STANDARD SPECIFICATIONS IN THE REGIONS NOTED FOR THE INSTALLATION OF THE C.I.P. CURB.
5. LIFTING EMBEDMENTS SHALL BE INSTALLED IN ACCORDANCE WITH SECTION 6-02.3(25)L OF THE STANDARD SPECIFICATIONS. AFTER ERECTION, CUT OFF LIFTING EMBEDMENTS 1 INCH BELOW THE TOP OF THE FLANGE AND FILL WITH AN APPROVED GROUT.
6. ALL REINFORCING STEEL SPLICES SHALL BE 2'-0" MINIMUM, UNLESS SHOWN OTHERWISE.
7. STRUCTURAL STEEL SHAPES AND ASSEMBLIES SHALL BE ASTM A36. THEY SHALL BE PAINTED WITH A PRIMER COAT IN ACCORDANCE WITH STD. SPEC. 6-07.3(9). WELD TIES SHALL BE PAINTED WITH A FIELD PRIMER COAT OF AN ORGANIC ZINC PAINT AFTER FIELD WELDING.
8. CAUTION SHALL BE EXERCISED IN HANDLING AND PLACING GIRDERS. ALL GIRDERS SHALL BE CHECKED BY THE CONTRACTOR TO ENSURE THAT THEY ARE BRACED ADEQUATELY TO PREVENT TIPPING AND TO CONTROL LATERAL BENDING DURING SHIPPING. ONCE ERECTED, ALL GIRDERS SHALL BE BRACED LATERALLY TO PREVENT TIPPING UNTIL THE DIAPHRAGMS ARE CAST AND CURED.
9. FOR DIAPHRAGMS, OMIT HOLES AND PLACE INSERTS ON THE INTERIOR FACE OF EXTERIOR GIRDERS. PLACE HOLES AND INSERTS PARALLEL TO SKEW. INSERTS SHALL BE 1"ø MEADOWBURKE MX-3 HI-TENSILE, 1"ø x 5½" WILLIAMS F22 OPEN FERRULE INSERT, 1"ø x 4⅝" DAYTON-SUPERIOR F-62 FLARED THIN SLAB FERRULE INSERT OR APPROVED EQUAL.

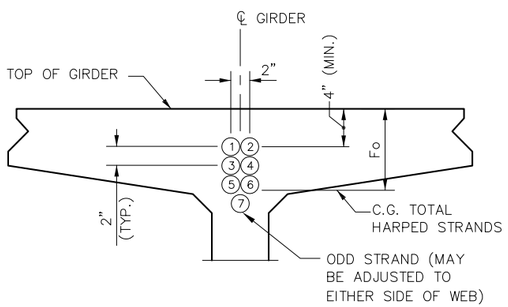

STRAND PATTERN AT GIRDER END

HARPED STRAND LOCATION SEQUENCE SHALL BE AS SHOWN (1), (2) ETC.

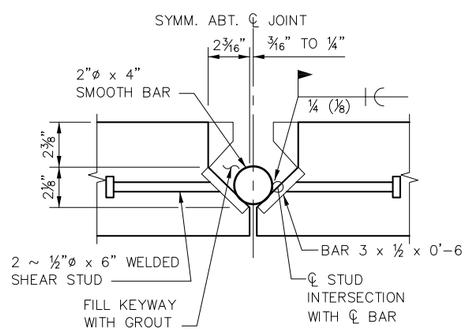

ALTERNATE 1

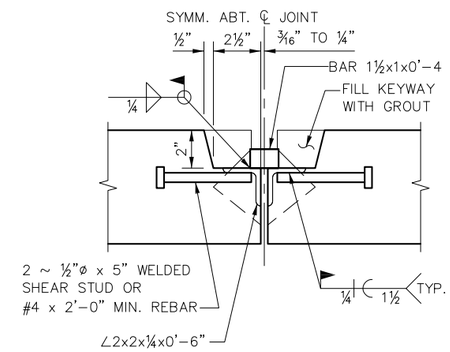

ALTERNATE 2

SECTION C
WELD TIE

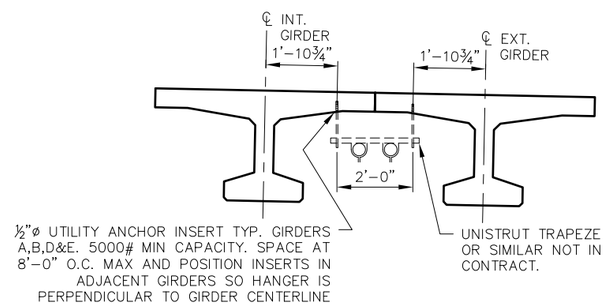

INSERTS FOR UTILITY HANGERS

Scale: 1/2" = 1'-0"

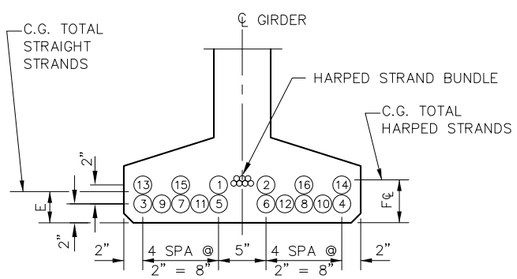

STRAND PATTERN AT MIDSPAN

STRAIGHT STRAND LOCATION SEQUENCE SHALL BE AS SHOWN (1), (2) ETC.

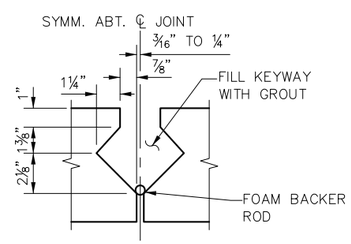

ALTERNATE 1

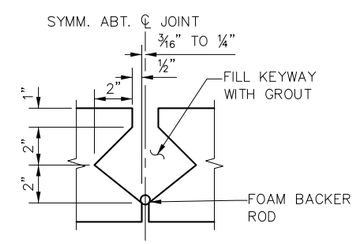

ALTERNATE 2

SECTION D
KEYWAY

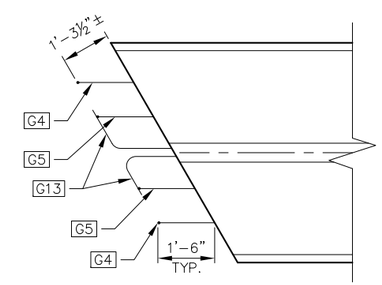

BAR EXTENSION DETAIL

Scale: 1/2" = 1'-0"

PROVIDE 9" HOOKS FOR G4 AND G5 AND 14" HOOKS FOR G13

100% DRAFT DESIGN SET

NO.	REVISION	BY	DATE

DESIGNED: JLP | CHECKED: DRS | PROJECT NO. 1805951934 | SCALE: AS NOTED
DRAWN: JLP | PROJECT ENGR: DRS
APPROVED: _____ CITY ENGINEER | DATE: 8/27/2015

BAR IS ONE INCH ON ORIGINAL DRAWING ADJUST SCALES ACCORDINGLY 0" 1"

Jefferson County
Department of Public Works

SHEARER DESIGN L.L.C.
Bridge Design, Construction Engineering, Infrastructure Aesthetics
3613 Phinney Ave N, # B
Seattle WA 98103
(206) 781-7830
WWW.SHEARERDESIGN.NET

West Uncas Road Culvert Replacement
JEFFERSON COUNTY, WA
GIRDER DETAILS II

SHEET 16 OF 22
FILE NO. SD-0265

Aug 27, 2015 - 4:19pm jashua \\SHEARERSERVER\Jobs\0265 W Uncas\Design\DWG\0265 Girder Details.dwg Layout Name: GIRDER DETAILS II

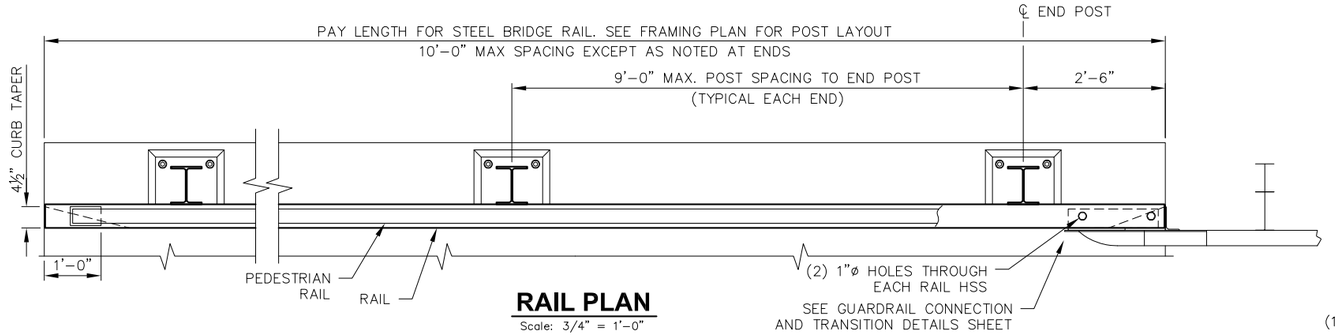

RAIL PLAN

Scale: 3/4" = 1'-0"

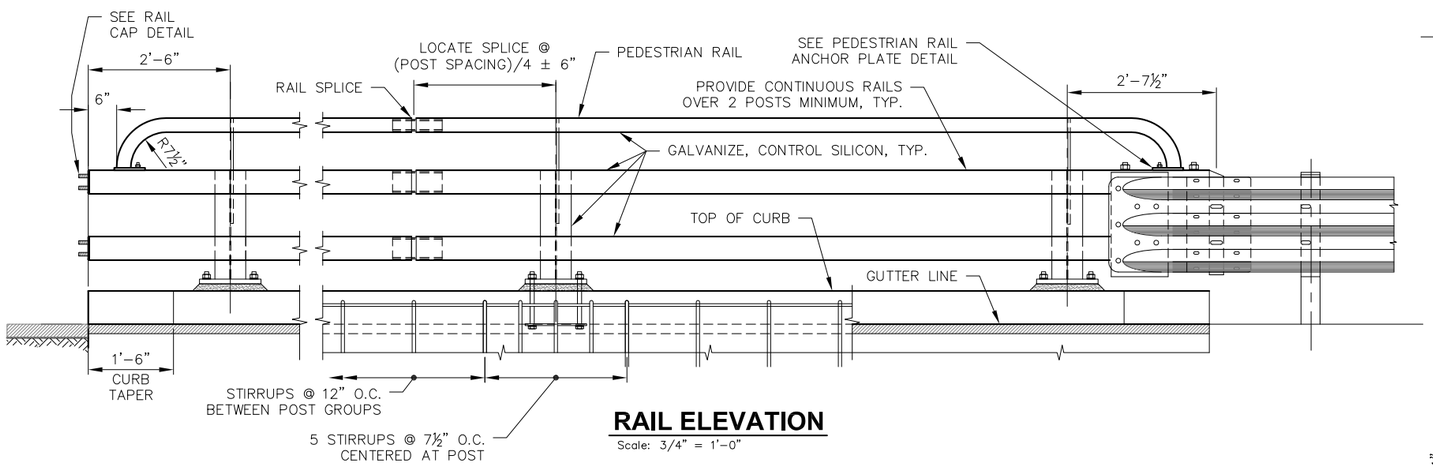

RAIL ELEVATION

Scale: 3/4" = 1'-0"

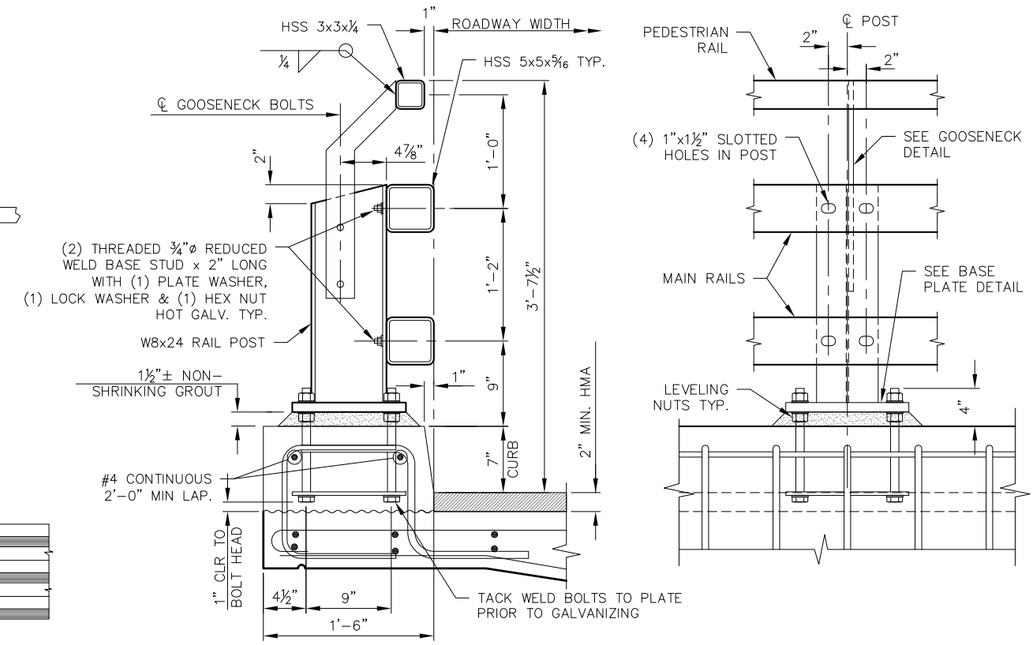

CURB AND POST DETAILS

Scale: 1-1/2" = 1'-0"

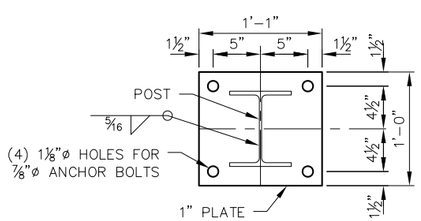

BASE PLATE DETAIL

Scale: 1-1/2" = 1'-0"

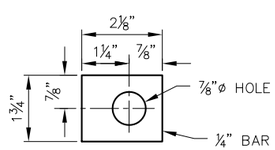

PLATE WASHER

Scale: 6" = 1'-0"

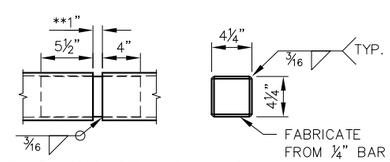

RAIL SPLICE DETAIL

Scale: 1-1/2" = 1'-0"

** 1" GAP UNLESS NOTED OTHERWISE ON PLANS. PROVIDE A RAIL SPLICE AT EACH BRIDGE DECK EXPANSION JOINT.

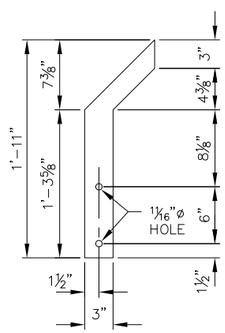

GOOSENECK DETAIL

Scale: 1-1/2" = 1'-0"

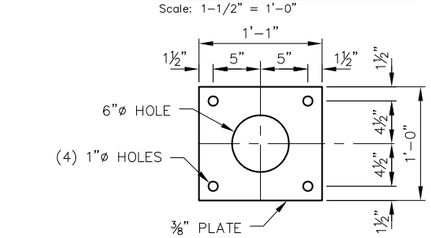

ANCHOR PLATE DETAIL

Scale: 1-1/2" = 1'-0"

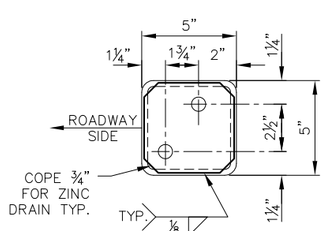

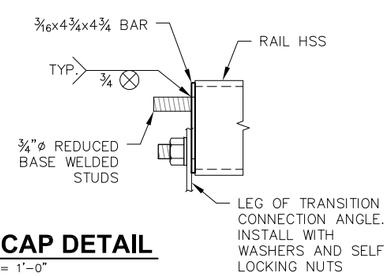

RAIL CAP DETAIL

Scale: 3" = 1'-0"

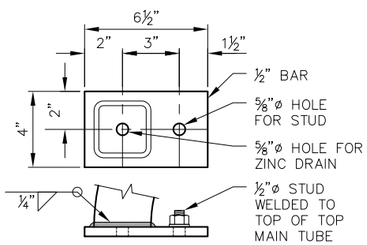

PEDESTRIAN RAIL BASE PLATE

Scale: 3" = 1'-0"

GENERAL NOTES

- RAIL BASED ON THE OREGON STANDARD 2-TUBE CURB MOUNT RAIL WHICH IS DESIGNED AND CRASH TESTED TO MEET NCHRP 350TL-4 REQUIREMENTS.
- ALL HSS RAILS SHALL CONFORM TO ASTM A500, GRADE B AND SHALL BE FABRICATED IN INTERVALS CONTINUOUS OVER TWO POSTS MINIMUM.
- ALL STEEL POSTS, PLATES, AND BARS SHALL CONFORM TO ASTM A36.
- ANCHOR BOLTS SHALL BE HIGH STRENGTH CONFORMING TO ASTM F1554 GRADE 105. ALL OTHER BOLTS NUTS AND WASHERS SHALL CONFORM TO ASTM A307 UNLESS NOTED OTHERWISE.
- AFTER FABRICATION ALL STEEL COMPONENTS SHALL BE HOT DIP GALVANIZED PER ASTM A123 OR ASTM A153 AS APPLICABLE. GALVANIZE-CONTROL SILICON MEANS SILICON CONTENT OF 0% TO 1.04%, OR 0.15% TO 0.25%.
- GROUT SHALL BE NON-SHRINK, NON-METALLIC, AND HAVE A MINIMUM 24 HOUR F'c OVER 3000 PSI.
- RAILS SHALL BE FABRICATED TAKING INTO ACCOUNT THE HORIZONTAL ALIGNMENT, AND VERTICAL PROFILE OF THE STRUCTURE. POSTS SHALL BE INSTALLED NORMAL TO GRADE.
- PAYMENT FOR THE RAILING SHALL INCLUDE COMPENSATION FOR FURNISHING AND INSTALLING THE NECESSARY GUARDRAIL TRANSITION CONNECTION PLATES AND CONNECTORS.

100% DRAFT DESIGN SET

NO.	REVISION	BY	DATE

DESIGNED: JLP | CHECKED: DRS | PROJECT NO. 1805951934 | SCALE: AS NOTED
DRAWN: JLP | PROJECT ENGR: DRS
APPROVED: _____ CITY ENGINEER | DATE: 8/27/2015
BAR IS ONE INCH ON ORIGINAL DRAWING ADJUST SCALES ACCORDINGLY 0" 1"

Jefferson County
Department of Public Works

SHEARER DESIGN L.L.C.
Bridge Design, Construction Engineering, Infrastructure Aesthetics
3613 Phinney Ave N. # B
Seattle WA 98103
(206) 781-7830
WWW.SHEARERDESIGN.NET

West Uncas Road Culvert Replacement
JEFFERSON COUNTY, WA
BRIDGE RAILING TYPE TWO TUBE PEDESTRIAN

SHEET 17 OF 22
FILE NO. SD-0265

Aug 27, 2015 - 4:19pm joshua \\SHEARERSERVER\Jobs\0265 W Uncas\Design\DWG\0265 Two Tube Rail Details.dwg Layout Name: BRIDGE RAILING TYPE TWO TUBE PEDESTRIAN

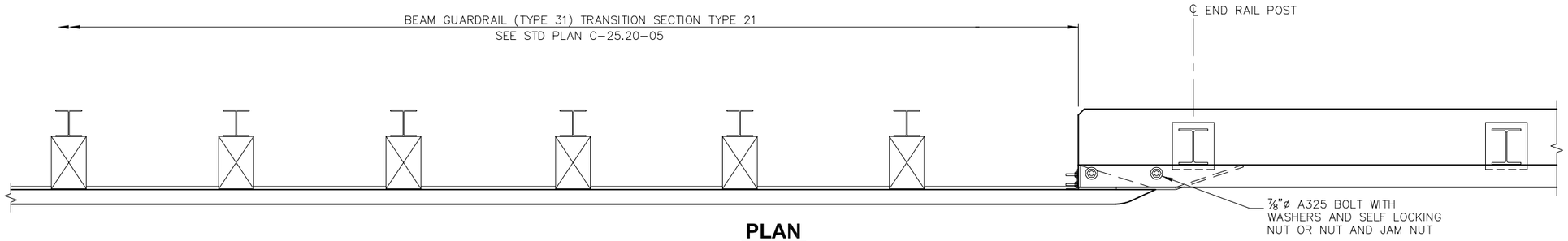

PLAN
Scale: NTS

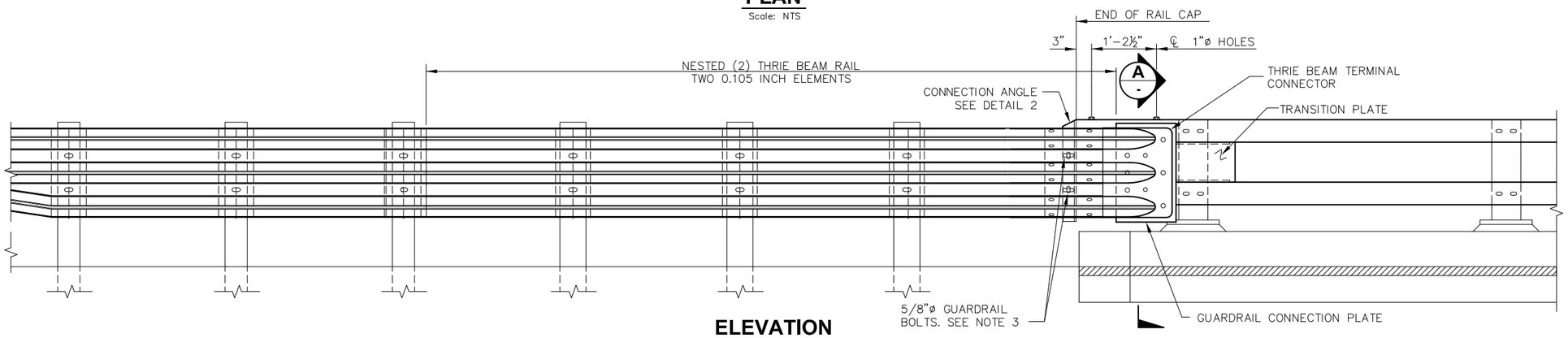

ELEVATION
Scale: NTS

GENERAL NOTES

1. ALL GUARDRAIL AND GUARDRAIL CONNECTION HARDWARE TO CONFORM TO AASHTO M-180. ALL OTHER STEEL TO CONFORM TO ASTM A709 GRADE 36.
2. LAP APPROACH GUARDRAIL TO PREVENT SNAGS FROM ONCOMING TRAFFIC.
3. PROVIDE 4½" HORIZONTAL SLOT IN APPROACH GUARDRAIL. ADJUST GUARDRAIL BOLTS FOR SLIDING FIT.
4. ALL POSTS FOR THE GUARDRAIL, TRANSITION AND END TERMINAL SHALL BE STEEL.

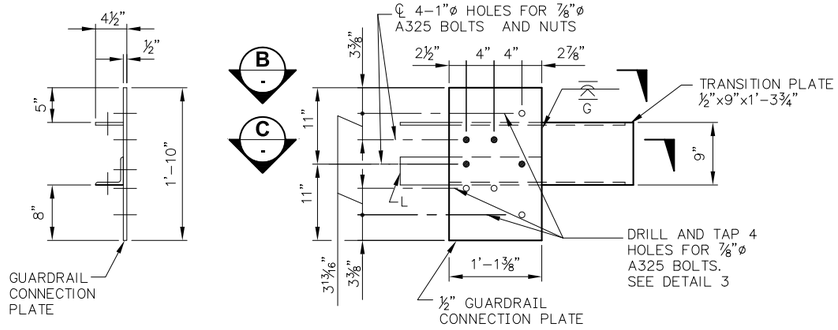

GUARDRAIL CONNECTION PLATE DETAIL (1)
Scale: NTS

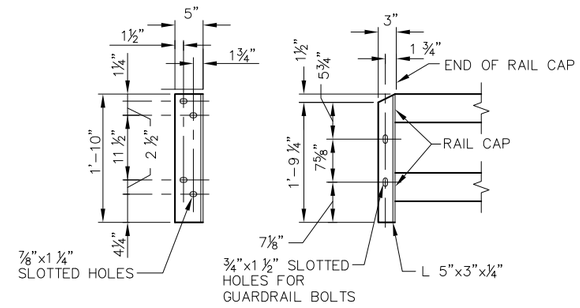

CONNECTION ANGLE DETAIL (2)
Scale: NTS

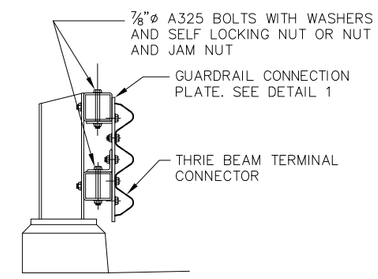

SECTION (A)
Scale: NTS

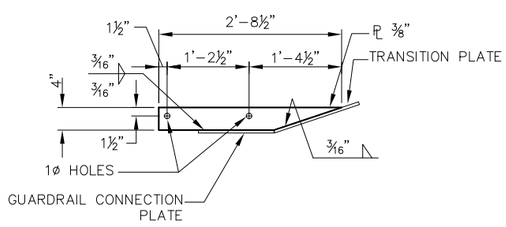

SECTION (B)
Scale: NTS

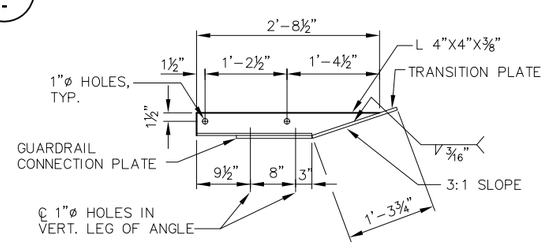

SECTION (C)
Scale: NTS

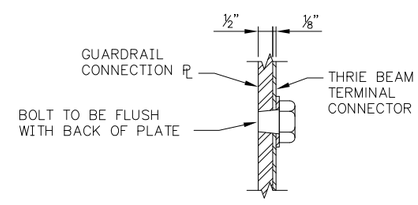

DETAIL (3)
Scale: NTS

100% DRAFT DESIGN SET

NO.	REVISION	BY	DATE

DESIGNED: JLP | CHECKED: DRS | PROJECT NO. 1805951934 | SCALE: AS NOTED
DRAWN: JLP | PROJECT ENGR: DRS
APPROVED: _____ CITY ENGINEER | DATE: 8/27/2015

BAR IS ONE INCH ON ORIGINAL DRAWING ADJUST SCALES ACCORDINGLY 0" 1"

Jefferson County
Department of Public Works

SHEARER DESIGN L.L.C.
Bridge Design, Construction Engineering, Infrastructure Aesthetics
3613 Phinney Ave N. # B
Seattle WA 98103
(206) 781-7830
WWW.SHEARERDESIGN.NET

West Uncas Road Culvert Replacement
JEFFERSON COUNTY, WA
GUARDRAIL TRANSITION DETAILS

SHEET 18 OF 22
FILE NO. SD-0265

Aug 27, 2015 - 4:19pm joshua \\SHEARERSERVER\Jobs\0265 W Uncas\Design\DWG\0265 Two Tube Rail Details.dwg Layout Name: GUARDRAIL TRANSITION DETAILS

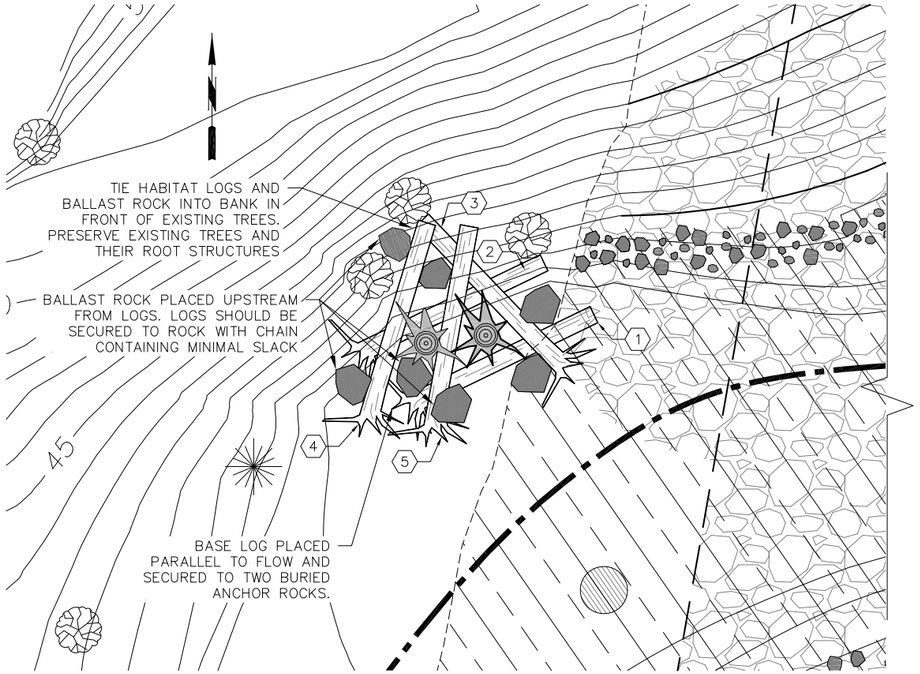

LARGE WOODY DEBRIS LAYOUT

Scale: 1"=5'-0"

LOG INSTALLATION AND STACKING ORDER INDICATED AS: (X)

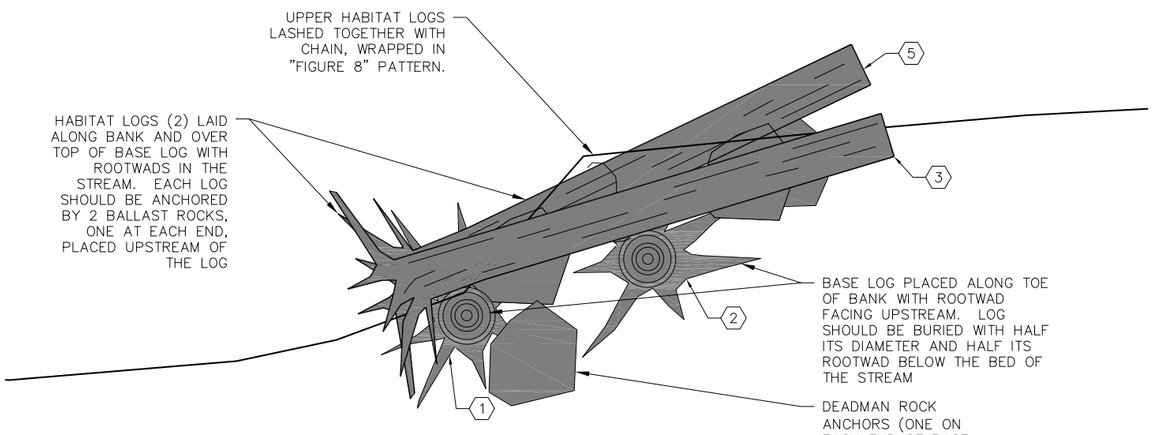

LARGE WOODY DEBRIS TYPICAL SECTION

Scale: 1"=2'-0"

NOTES:

FINAL PLACEMENT OF HABITAT LOGS AND ANCHORS WILL BE DIRECTED BY THE ENGINEER.

WOOD

WOOD SPECIES SHALL BE DOUGLAS FIR, RED CEDAR, OR SITKA SPRUCE. LOGS MUST BE GREEN (NOT STOCKPILED). DIAMETER AT CUT END SHALL BE 18 INCHES OR GREATER, AND ROOTWADS SHALL HAVE A MINIMUM DIAMETER OF 5 FEET

ANCHOR ROCK

ROCK USED TO ANCHOR LOGS SHALL BE A MINIMUM OF 4 FEET IN DIAMETER.

TWO ROCK ANCHORS, ONE AT EACH END, SHALL BE BURIED BENEATH BASE LOG.

BALLAST ROCK (2 PER LOG, ONE AT EACH END) SHALL BE PLACED UPSTREAM FROM REMAINING LOGS TO ALLOW CONNECTIONS. DRILL MINIMUM 8" HOLE IN ROCK, CLEAN HOLE THOROUGHLY, INSERT EYE BOLT (WITH HIGHER BREAK STRENGTH THAN CHAIN), AND SECURE WITH EPOXY ACCORDING TO MANUFACTURERS SPECIFICATIONS.

CONNECTIONS

USE MINIMUM 3/8" GRADE 70 TRANSPORT CHAIN, AND SHACKLES WITH A HIGHER BREAK STRENGTH THAN CHAIN. NOTCHES SHALL BE CUT IN LOGS BEFORE CHAIN IS WRAPPED.
USE GALVANIZED STAPLES TO SECURE CHAIN FROM SLIPPING.

WRAP UPPER LOGS TOGETHER WHERE THEY CROSS BY CUTTING A NOTCH AROUND EACH LOG AND WRAPPING CHAIN IN A FIGURE 8 PATTERN. SECURE CHAIN WITH SHACKLE AND GALVANIZED STAPLES.

EYE BOLT EPOXIED INTO MINIMUM 8", CLEAN, DRILLED HOLE IN ROCK. CHAIN CONNECTED TO EYE BOLT USING SHACKLE WITH HIGHER BREAK STRENGTH THAN CHAIN. SPOT WELD OR DEFORM THREADS AFTER INSTALLATION TO PREVENT UNSCREWING.

70 CHAIN RUN THROUGH NOTCH IN HABITAT LOG AND SECURED USING STAPLES. PROVIDE MINIMAL SLACK BETWEEN ANCHOR POINT AND LOG.

100% DRAFT DESIGN SET

NO.	REVISION	BY	DATE

DESIGNED: JLP | CHECKED: DRS | PROJECT NO. 1805951934 | SCALE: AS NOTED
DRAWN: JLP | PROJECT ENGR: DRS
APPROVED: _____ CITY ENGINEER | DATE: 8/27/2015

BAR IS ONE INCH ON ORIGINAL DRAWING ADJUST SCALES ACCORDINGLY 0" 1"

Jefferson County
Department of Public Works

SHEARER DESIGN L.L.C.
Bridge Design, Construction Engineering, Infrastructure Aesthetics

3613 Phinney Ave N, # B
Seattle WA 98103
(206) 781-7830
WWW.SHEARERDESIGN.NET

West Uncas Road Culvert Replacement
JEFFERSON COUNTY, WA
STREAM DETAILS

SHEET 19 OF 22
FILE NO. SD-0265

Aug 27, 2015 - 4:19pm joshua \\SHEARERSERVER\Jobs\0265 W Uncas\Design\DWG\0265 Stream Details.dwg Layout Name: STREAM DETAILS

GENERAL NOTES

1. FOLLOWING CONSTRUCTION OF IMPROVEMENTS, CONTRACTOR SHALL GRADE DISTURBED AREAS TO MATCH PROPOSED CONTOURS.
2. ON FINISHED GRADED AREA, CONTRACTOR SHALL APPLY THE SLOPE PROTECTION DETAIL AS SHOWN ON THIS SHEET TO ALL AREAS IDENTIFIED FOR RESTORATION OR AS BY DIRECTED BY ENGINEER IN THE FIELD.
3. AFTER COMPETITION OF THE SLOPE PROTECTION THE CONTRACTOR SHALL PLANT LIVE WILLOW STAKES TWO ROWS AT A GRID DENSITY OF 4'–0" O.C.
4. THE TERMINAL SEEDING PLAN SHALL APPLY TO ALL FOUR CORNERS OF THE BRIDGE. ALL DISTURBED AREAS DUE TO GUARDRAIL INSTALLATION AND RESULTING EMBANKMENT WIDENING SHALL BE SEEDED.

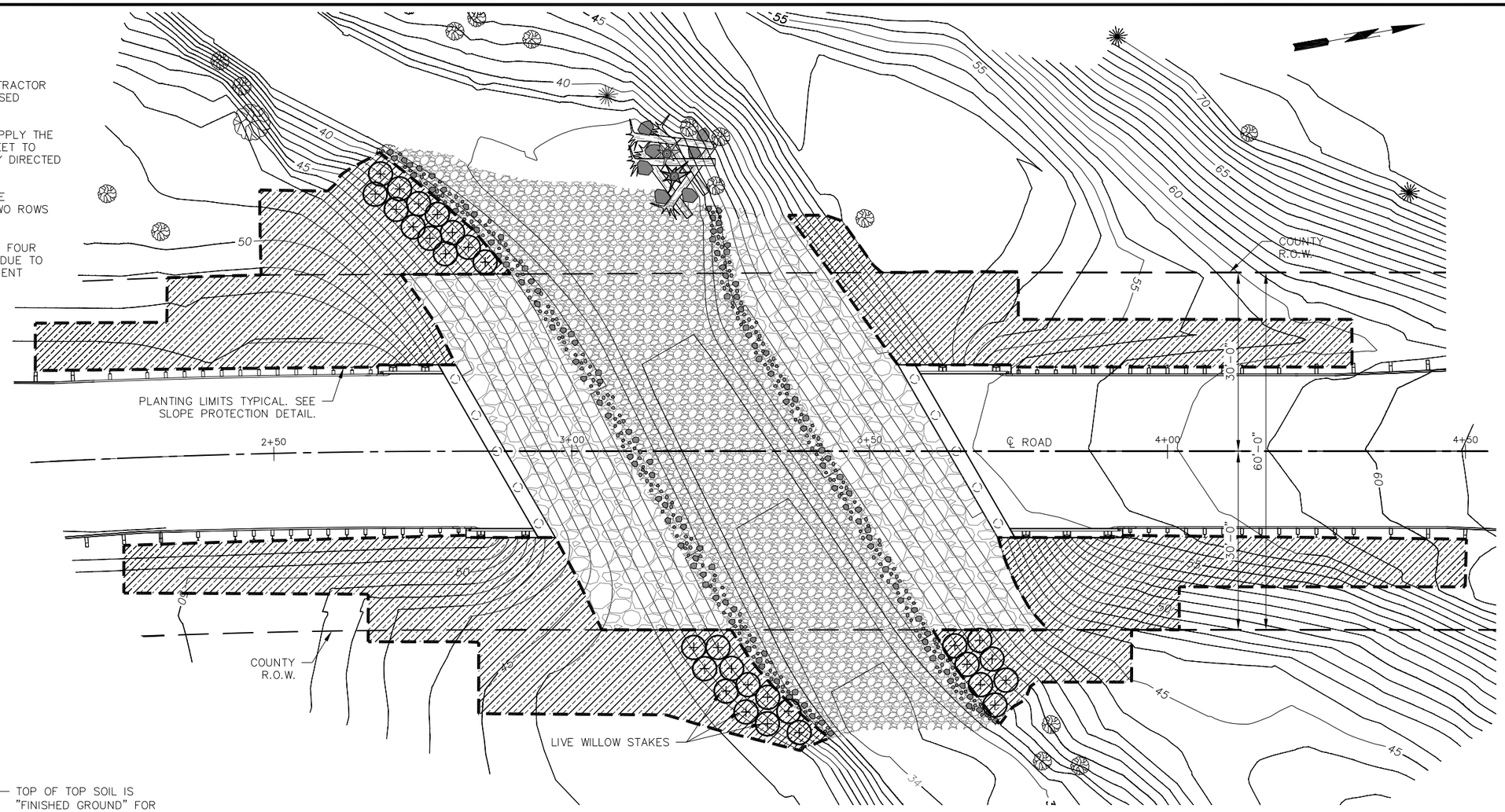

PLANTING PLAN

Scale: 1"=10'–0"

0 10' 20'

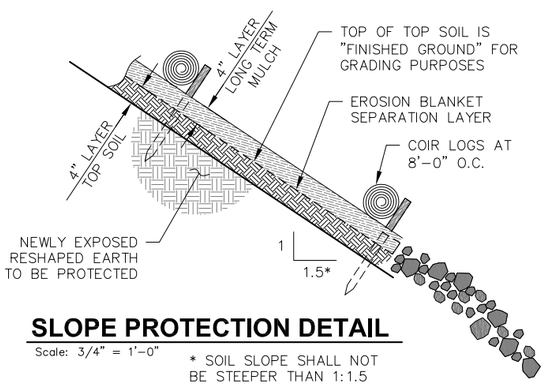

SLOPE PROTECTION DETAIL

Scale: 3/4" = 1'–0"

* SOIL SLOPE SHALL NOT BE STEEPER THAN 1:1.5

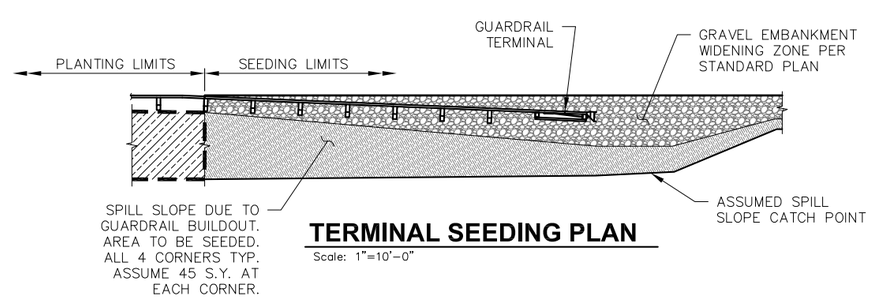

TERMINAL SEEDING PLAN

Scale: 1"=10'–0"

LAYOUT KEY

PLANTING LIMITS APPROX. 580 S.Y.

LIVE WILLOW STAKES

100% DRAFT DESIGN SET

NO.	REVISION	BY	DATE

DESIGNED: JLP | CHECKED: DRS | PROJECT NO. 1805951934 | SCALE: AS NOTED
DRAWN: JLP | PROJECT ENGR: DRS
APPROVED: _____ CITY ENGINEER | DATE: 8/27/2015

BAR IS ONE INCH ON ORIGINAL DRAWING ADJUST SCALES ACCORDINGLY 0" 1"

Jefferson County
Department of Public Works

SHEARER DESIGN L.L.C.
Bridge Design, Construction Engineering, Infrastructure Aesthetics
3613 Phinney Ave N. # B
Seattle WA 98103
(206) 781-7830
WWW.SHEARERDESIGN.NET

West Uncas Road Culvert Replacement
JEFFERSON COUNTY, WA
PLANTING PLAN

SHEET 20 OF 22
FILE NO. SD–0265

Aug 27, 2015 - 4:19pm joshua \\SHEARERSERVER\Jobs\0265 W Uncas\Design\DWG\0265 Planting Plan.dwg Layout Name: PLANTING PLAN

S = BAR IS INCLUDED SUBSTRUCTURE QUANTITIES
L = LUMP SUM QUANTITY
T = TRANSVERSE OR E = EARTHQUAKE
E = BAR IS TO BE EPOXY COATED
V = BAR DIMENSIONS VARY BETWEEN DIMENSIONS SHOWN ON THIS LINE AND THE FOLLOWING LINE

MARK NO.	LOCATION	SIZE	NO. REQ'D	BEND TYPE	TIE OR STIR	LUMP SUM	SUBSTR.	EPOXY COAT	VARIES	NO. EACH	DIMENSIONS (OUT TO OUT) U FEET	W FEET	X FEET	Y FEET	Z FEET	θ1 DEG.	θ2 DEG.	LENGTH FEET	MASS LB
	ABUTMENT 1																		
A301	Tie	3	50	58	T		S				2 3.0							2 8.9	52
A401	End Caps	4	18	74			S				2 0.0	1 0.0	1 0.0					3 9.5	46
A511	Hider Wall Verticals	5	10	74			S				1 2.0	9 0.0	4 0.0					13 10.9	145
A512	Hider Wall Stirrup	5	8	93	T		S				8 0.0	0 0.0	0 0.0	0 0.0	0 0.0			8 0.0	67
A601	Dowel Pin	6	30	50			S	E			4 0.0							4 0.0	180
A602	Wall Face Stream Side	6	4	80			S				33 0.0	1 0.0	1 0.0	0 4.0	0 4.0	120	60	34 4.9	207
A603	Main Cap	6	52	74	T		S				2 2.0	2 6.0	2 6.0					6 10.2	535
A605	Corner Cap	6	8	74	T		S		V	2	2 2.0	2 6.0	2 6.0					6 10.2	84
											2 6.0	2 6.0	2 6.0					7 2.2	
A606	Bottom U's Btwn Piles	6	8	74	T		S				5 0.0	3 0.0	3 0.0					10 8.2	128
A607	Bottom U's at Ext Pile	6	2	74	T		S				1 2.5	3 0.0	3 0.0					6 10.7	21
A608	Bottom U's at Ext Pile	6	2	74	T		S				1 8.5	3 0.0	3 0.0					7 4.7	22
A612	Main Stirrup	6	42	74	T		S				2 2.0	7 0.0	7 0.0					15 10.2	1000
A614	Corner Stirrup	6	8	74	T		S		V	2	2 2.0	7 0.0	7 0.0					15 10.2	192
											2 6.0	7 0.0	7 0.0					16 2.2	
A616	Vertical U at Pile	6	10	74	T		S				0 9.0	7 0.0	7 0.0					14 5.2	217
A801	Main Longits	8	6	56			S				33 0.0							35 3.0	565
A802	Main Pile Confinement	8	48	91			S				8 0.0	0 0.0	0 0.0	0 0.0	0 0.0			8 0.0	1025
A803	Corner Pile Confinement	8	12	92			S				8 5.0	0 0.0	0 0.0	0 0.0	0 0.0			8 5.0	270
A804	Wall Face	8	12	80			S				33 0.0	1 0.0	1 0.0	0 4.0	0 4.0	120	60	34 4.5	1101
D401	Diaph Face Longit	4	1	50				E			33 1.0							33 1.0	22
D402	Diaph Cantilever Stirrup	4	12	74	T			E			1 7.0	0 10.0	0 10.0					3 0.9	25
D404	Diaph Face Longit	4	1	50				E			18 0.0							18 0.0	12
D405	Diaph Face Longit	4	2	50				E			3 9.0							3 9.0	5
D406	Diaph Face Longit	4	1	50				E			29 8.0							29 8.0	20
D501	Main Diaph Stirrup	5	40	83	T			E			2 9.0	1 7.0						9 3.2	387
D502	Diaph Curb Stirrup	5	4	62				E			1 4.0	1 7.5	1 7.5	0 6.0	1 0.0			5 6.7	23
D801	Diaph Top Longit	8	3	52				E			33 1.0							34 11.0	280
D802	Diaph Bottom Longit	8	3	56				E			29 8.0							31 11.0	256
W422	Curb Longit Left WW	4	2	50				E	V	1	8 11.0							8 11.0	12
											9 6.0							9 6.0	
W423	Curb Longit Right WW	4	2	50				E	V	1	10 11.0							10 11.0	15
											11 6.0							11 6.0	
W503	Curb Bar	5	32	74				E			1 2.0	3 0.0	3 0.0					6 10.9	230
W513	Left WW Main Stirrup	5	11	74	T		S		V	1	1 2.0	3 7.0	3 7.0					8 1.4	167
											1 2.0	10 0.0	10 0.0					20 11.4	
W514	Right WW Main Stirrup	5	12	74	T		S		V	1	1 2.0	2 6.0	2 6.0					5 11.4	168
											1 2.0	10 0.0	10 0.0					20 11.4	
W601	WW End Caps	6	10	74	T		S				1 0.0	1 6.0	1 6.0					3 8.2	55
W611	Left WW Outside Face	6	9	50			S		V	1	11 9.0							11 9.0	108
											4 3.0							4 3.0	
W612	Right WW Outside Face	6	11	50	T		S		V	1	14 3.0							14 3.0	153
											4 3.0							4 3.0	
W613	Left WW Outside Face	6	4	50	T		S				11 11.0							11 11.0	72
W614	Right WW Outside Face	6	2	50			S				14 5.0							14 5.0	43
W615	Left WW Outside Face	6	1	50	T		S				8 11.0							8 11.0	13
W616	Right WW Outside Face	6	1	50			S				11 6.0							11 6.0	17
W805	Top of Right WW	8	1	56			S				11 6.0							13 9.0	37
W806	Top of Right WW	8	1	56			S				10 11.0							13 2.0	35
W807	Top of Left WW	8	1	56			S				9 6.0							11 9.0	31
W808	Top of Left WW	8	1	56			S				8 11.0							11 2.0	30
W811	Bot of Right WW	8	1	80			S				14 2.0	2 0.0	2 0.0	0 4.0	0 4.0	124	146	18 0.8	48
W812	Bot of Right WW	8	1	80			S				13 7.0	2 0.0	2 0.0	0 4.0	0 4.0	124	146	17 5.8	47
W813	Bot of Left WW	8	1	80	T		S				12 4.0	2 0.0	2 0.0	0 4.0	0 4.0	124	146	16 2.8	43
W814	Bot of Right WW	8	1	80	T		S				11 9.0	2 0.0	2 0.0	0 4.0	0 4.0	124	146	15 7.8	42

S = BAR IS INCLUDED SUBSTRUCTURE QUANTITIES
L = LUMP SUM QUANTITY
T = TRANSVERSE OR E = EARTHQUAKE
E = BAR IS TO BE EPOXY COATED
V = BAR DIMENSIONS VARY BETWEEN DIMENSIONS SHOWN ON THIS LINE AND THE FOLLOWING LINE

MARK NO.	LOCATION	SIZE	NO. REQ'D	BEND TYPE	TIE OR STIR	LUMP SUM	SUBSTR.	EPOXY COAT	VARIES	NO. EACH	DIMENSIONS (OUT TO OUT) U FEET	W FEET	X FEET	Y FEET	Z FEET	θ1 DEG.	θ2 DEG.	LENGTH FEET	MASS LB
W911	Left WW Inside Face	9	9	50			S		V	1	12 3.0							12 3.0	252
											4 3.0							4 3.0	
W912	Right WW Inside Face	9	11	50			S		V	1	13 9.0							13 9.0	327
											3 9.0							3 9.0	
W913	Left WW Inside Face	9	4	50	T		S				12 5.0							12 5.0	169
W914	Right WW Inside Face	9	2	50			S				13 11.0							13 11.0	95
W915	Left WW Inside Face	9	1	50	T		S				9 6.0							9 6.0	32
W916	Right WW Inside Face	9	1	50			S				10 11.0							10 11.0	37
W917	Left WW Tie	9	7	80			S				9 8.0	2 0.0	2 0.0	0 6.0	0 6.0	120	120	13 5.5	320
W918	Right WW Tie	9	8	80			S				5 8.0	2 0.0	2 0.0	0 6.0	0 6.0	120	120	9 5.5	257

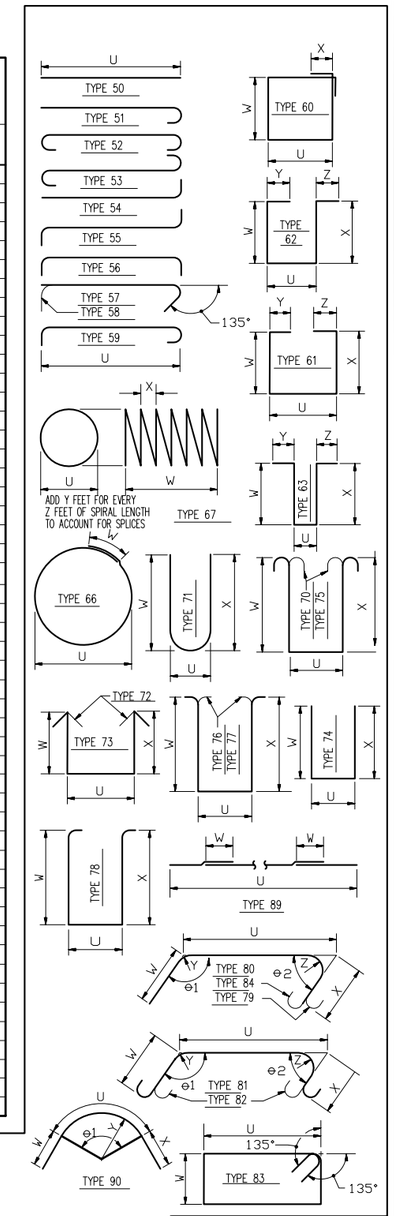

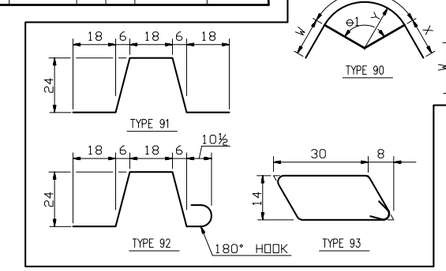

NOTES:

1. ALL REINFORCING BARS SHALL BE AASHTO M-31 GR. 60
2. BAR LIST PROVIDED AS INFORMATION ONLY. THE FINAL NUMBER AND LENGTH OF BARS SHALL BE DETERMINED BY THE CONTRACTOR FROM THE PLANS PRIOR TO FABRICATION.
3. QUANTITIES SHOWN ON THIS SHEET ARE FOR ABUTMENT 1 WITH WINGWALLS ONLY.

100% DRAFT DESIGN SET

NO.	REVISION	BY	DATE

DESIGNED: JLP | CHECKED: DRS | PROJECT NO. 1805951934 | SCALE: AS NOTED
DRAWN: JLP | PROJECT ENGR: DRS
APPROVED: _____ CITY ENGINEER | DATE: 8/27/2015
BAR IS ONE INCH ON ORIGINAL DRAWING ADJUST SCALES ACCORDINGLY 0" 1"

Jefferson County
Department of Public Works

SHEARER DESIGN L.L.C.
Bridge Design, Construction Engineering, Infrastructure Aesthetics
3613 Phinney Ave N. # B
Seattle WA 98103
(206) 781-7830
WWW.SHEARERDESIGN.NET

West Uncas Road Culvert Replacement
JEFFERSON COUNTY, WA
BAR LIST I

SHEET 21 OF 22
FILE NO. SD-0265

Aug 27, 2015 - 4:19pm joshua \\SHEARERSERVER\Jobs\0265 W Uncas\Design\DWG\0265 Bar list.dwg Layout Name: BAR LIST I

S = BAR IS INCLUDED SUBSTRUCTURE QUANTITIES
L = LUMP SUM QUANTITY
T = TRANSVERSE OR E = EARTHQUAKE
E = BAR IS TO BE EPOXY COATED
V = BAR DIMENSIONS VARY BETWEEN DIMENSIONS SHOWN ON THIS LINE AND THE FOLLOWING LINE

MARK NO.	LOCATION	SIZE	NO REQ'D	BEND TYPE	TIE OR STIR	LUMP SUM	SUBSTR.	EPOXY COAT	VARIES	NO. EACH	DIMENSIONS (OUT TO OUT) U FEET	W FEET	X FEET	Y FEET	Z FEET	θ1 DEG.	θ2 DEG.	LENGTH FEET	MASS LB
	ABUTMENT 2																		
A301	Tie	3	70	58	T		S				2 3.0							2 8.9	72
A401	End Caps	4	22	74			S				2 0.0	1 0.0	1 0.0					3 9.5	56
A521	Hider Wall Verticals	5	10	74			S				1 2.0	10 6.0	4 0.0					15 4.9	161
A522	Hider Wall Stirrup	5	8	93	T		S				8 0.0	0 0.0	0 0.0	0 0.0	0 0.0			8 0.0	67
A601	Dowel Pin	6	30	50			S	E			4 0.0							4 0.0	180
A602	Wall Face Stream Side	6	7	80			S				33 0.0	1 0.0	1 0.0	0 4.0	0 4.0	120	60	34 4.9	362
A603	Main Cap	6	52	74	T		S				2 2.0	2 6.0	2 6.0					6 10.2	535
A605	Corner Cap	6	8	74	T		S		V	2	2 2.0	2 6.0	2 6.0					6 10.2	84
											2 6.0	2 6.0	2 6.0					7 2.2	
A606	Bottom U's Btwn Piles	6	8	74	T		S				5 0.0	3 0.0	3 0.0					10 8.2	128
A607	Bottom U's at Ext Pile	6	2	74	T		S				1 2.5	3 0.0	3 0.0					6 10.7	21
A608	Bottom U's at Ext Pile	6	2	74	T		S				1 8.5	3 0.0	3 0.0					7 4.7	22
A622	Main Stirrup	6	42	74	T		S				2 2.0	9 0.0	9 0.0					19 10.2	1252
A624	Corner Stirrup	6	8	74	T		S		V	2	2 2.0	9 0.0	9 0.0					19 10.2	241
											2 6.0	9 0.0	9 0.0					20 2.2	
A626	Vertical U at Pile	6	10	74	T		S				0 9.0	9 0.0	9 0.0					18 5.2	277
A801	Main Longits	8	6	56			S				33 0.0							35 3.0	565
A802	Main Pile Confinement	8	48	91			S				8 0.0	0 0.0	0 0.0	0 0.0	0 0.0			8 0.0	1025
A803	Corner Pile Confinement	8	12	92			S				8 5.0	0 0.0	0 0.0	0 0.0	0 0.0			8 5.0	270
A804	Wall Face	8	8	80			S				33 0.0	1 0.0	1 0.0	0 4.0	0 4.0	120	60	34 4.5	734
D401	Diaph Face Longit	4	1	50				E			33 1.0							33 1.0	22
D402	Diaph Cantilever Stirrup	4	12	74	T			E			1 7.0	0 10.0	0 10.0					3 0.9	25
D404	Diaph Face Longit	4	1	50				E			18 0.0							18 0.0	12
D405	Diaph Face Longit	4	2	50				E			3 9.0							3 9.0	5
D406	Diaph Face Longit	4	1	50				E			29 8.0							29 8.0	20
D501	Main Diaph Stirrup	5	40	83	T			E			2 9.0	1 7.0						9 3.2	387
D502	Diaph Curb Stirrup	5	4	62				E			1 4.0	1 7.5	1 7.5	0 6.0	1 0.0			5 6.7	23
D801	Diaph Top Longit	8	3	52				E			33 1.0							34 11.0	280
D802	Diaph Bottom Longit	8	3	56				E			29 8.0							31 11.0	256
W421	Curb Longit Left WW	4	2	50				E	V	1	14 11.0							14 11.0	20
											15 6.0							15 6.0	
W424	Curb Longit Right WW	4	2	50				E	V	1	16 11.0							16 11.0	23
											17 6.0							17 6.0	
W503	Curb Bar	5	46	74				E			1 2.0	3 0.0	3 0.0					6 10.9	331
W523	Left WW Main Stirrup	5	17	74	T		S		V	1	1 2.0	2 6.0	2 6.0					5 11.4	274
											1 2.0	12 0.0	12 0.0					24 11.4	
W524	Right WW Main Stirrup	5	19	74	T		S		V	1	1 2.0	2 0.0	2 0.0					4 11.4	311
											1 2.0	12 9.0	12 9.0					26 5.4	
W601	WW End Caps	6	9	74	T		S				1 0.0	1 6.0	1 6.0					3 8.2	50
W621	Left WW Outside Face	6	20	50			S		V	1	18 6.0							18 6.0	342
											4 3.0							4 3.0	
W622	Right WW Outside Face	6	22	50			S		V	1	20 0.0							20 0.0	401
											4 3.0							4 3.0	
W623	Left WW Outside Face	6	1	50			S				18 6.0							18 6.0	28
W624	Right WW Outside Face	6	4	50			S				17 8.0							17 8.0	106
W625	Left WW Outside Face	6	3	50			S				15 8.0							15 8.0	71
W905	Top of Right WW	9	1	56			S				18 0.0							20 7.8	70
W906	Top of Right WW	9	1	56			S				17 6.0							20 1.8	69
W907	Top of Left WW	9	1	56			S				15 6.0							18 1.8	62
W908	Top of Left WW	9	1	56			S				15 0.0							17 7.8	60
W821	Bot of Right WW	8	1	80			S				21 11.0	1 9.0	2 0.0	0 4.0	0 4.0	124	146	25 6.8	68
W822	Bot of Right WW	8	1	80			S				21 4.0	1 9.0	2 0.0	0 4.0	0 4.0	124	146	24 11.8	67
W823	Bot of Left WW	8	1	80	T		S				18 11.0	2 0.0	2 0.0	0 4.0	0 4.0	124	146	22 9.8	61
W824	Bot of Right WW	8	1	80	T		S				11 4.0	2 0.0	2 0.0	0 4.0	0 4.0	124	146	15 2.8	41
W921	Left WW Inside Face	9	20	50			S		V	1	18 0.0							18 0.0	740
											3 9.0							3 9.0	
W922	Right WW Inside Face	9	22	50			S		V	1	20 6.0							20 6.0	944
											4 9.0							4 9.0	
W923	Left WW Inside Face	9	1	50			S				18 0.0							18 0.0	61
W924	Right WW Inside Face	9	4	50			S				18 2.0							18 2.0	247
W925	Left WW Inside Face	9	3	50			S				15 2.0							15 2.0	155
W928	Right WW Tie	9	15	80			S				9 8.0	2 0.0	2 0.0	0 6.0	0 6.0	120	120	13 5.5	687
W927	Left WW Tie	9	15	80			S				5 8.0	2 0.0	2 0.0	0 6.0	0 6.0	120	120	9 5.5	483

S = BAR IS INCLUDED SUBSTRUCTURE QUANTITIES
L = LUMP SUM QUANTITY
T = TRANSVERSE OR E = EARTHQUAKE
E = BAR IS TO BE EPOXY COATED
V = BAR DIMENSIONS VARY BETWEEN DIMENSIONS SHOWN ON THIS LINE AND THE FOLLOWING LINE

MARK NO.	LOCATION	SIZE	NO REQ'D	BEND TYPE	TIE OR STIR	LUMP SUM	SUBSTR.	EPOXY COAT	VARIES	NO. EACH	DIMENSIONS (OUT TO OUT) U FEET	W FEET	X FEET	Y FEET	Z FEET	θ1 DEG.	θ2 DEG.	LENGTH FEET	MASS LB
	PILES																		
C601	Longit	6	80	50			S				25 0.0							25 0.0	3004
C303	Spiral	3	10	67			S				1 3.0	14 6.0	0 3.0	2 0.0	8 0.0			278 2.4	1047
C304	Spiral	3	10	67			S				1 3.0	8 0.0	0 6.0	2 0.0	16 0.0			69 6.1	262
	BRIDGE CURB																		
C401	Curb	4	4	89				E			79 8.0	2 0.0						81 8.0	218

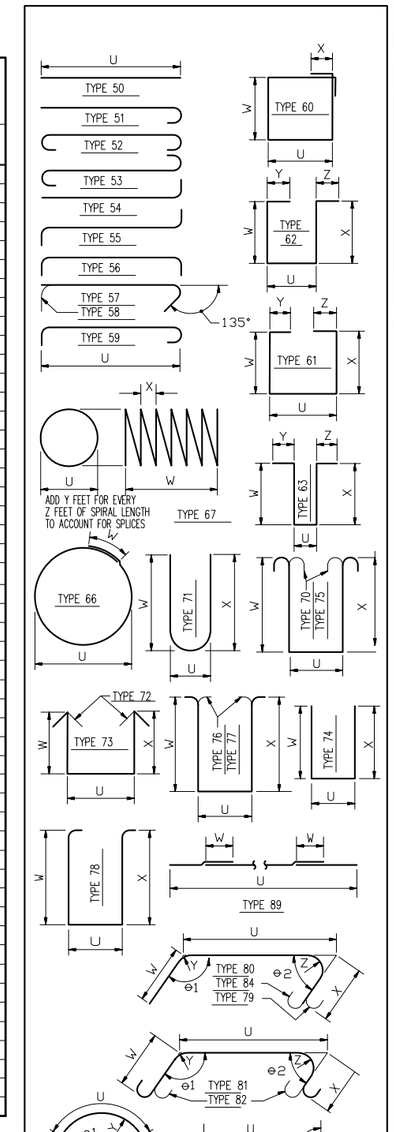

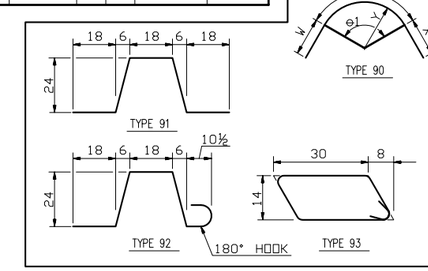

NOTES:

1. ALL REINFORCING BARS SHALL BE AASHTO M-31 GR. 60
2. BAR LIST PROVIDED AS INFORMATION ONLY. THE FINAL NUMBER AND LENGTH OF BARS SHALL BE DETERMINED BY THE CONTRACTOR FROM THE PLANS PRIOR TO FABRICATION.
3. QUANTITIES SHOWN ON THIS SHEET ARE FOR ABUTMENT 2 WITH WINGWALLS, ALL PILING, AND CURB LONGITUDINAL BARS.

100% DRAFT DESIGN SET

NO.	REVISION	BY	DATE

DESIGNED: JLP | CHECKED: DRS | PROJECT NO. 1805951934 | SCALE: AS NOTED
DRAWN: JLP | PROJECT ENGR: DRS
APPROVED: _____ CITY ENGINEER | DATE: 8/27/2015
BAR IS ONE INCH ON ORIGINAL DRAWING ADJUST SCALES ACCORDINGLY 0" 1"

Jefferson County
Department of Public Works

SHEARER DESIGN L.L.C.
Bridge Design, Construction Engineering, Infrastructure Aesthetics
3613 Phinney Ave N. # B
Seattle WA 98103
(206) 781-7830
WWW.SHEARERDESIGN.NET

West Uncas Road Culvert Replacement
JEFFERSON COUNTY, WA
BAR LIST II

SHEET 22 OF 22
FILE NO. SD-0265

Aug 27, 2015 - 4:19pm joshua \\SHEARERSERVER\Jobs\0265 W Uncas\Design\DWG\0265 Bar list.dwg Layout Name: BAR LIST II