CITY OF BOTHELL
SAMMAMISH RIVER OFF-CHANNEL HABITAT RESTORATION PROJECT
100% DESIGN

PROJECT NO. 84065113.0305

CONTACT PERSONNEL

NAME	AGENCY	PHONE
REGINA DERDA	COB PROJECT ENGINEER	425-806-6831
PAUL DEVRIES	R2 RESOURCE CONSULTANTS	425-556-1288

City of Bothell™

CITY OFFICIALS

ANDY RHEAUME	MAYOR
DAVINA DUERR	DEPUTY MAYOR
JOSHUA FREED	COUNCIL MEMBER
DEL SPIVEY	COUNCIL MEMBER
JAMES MCNEAL	COUNCIL MEMBER
TRIS SAMBERG	COUNCIL MEMBER
TOM AGNEW	COUNCIL MEMBER
LAURA HATHAWAY	CITY CLERK
JOE BECK	CITY ATTORNEY
ROBERT STOWE	CITY MANAGER

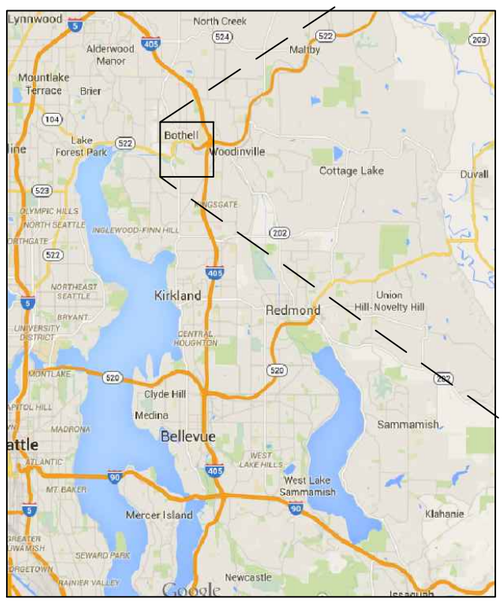

VICINITY MAP

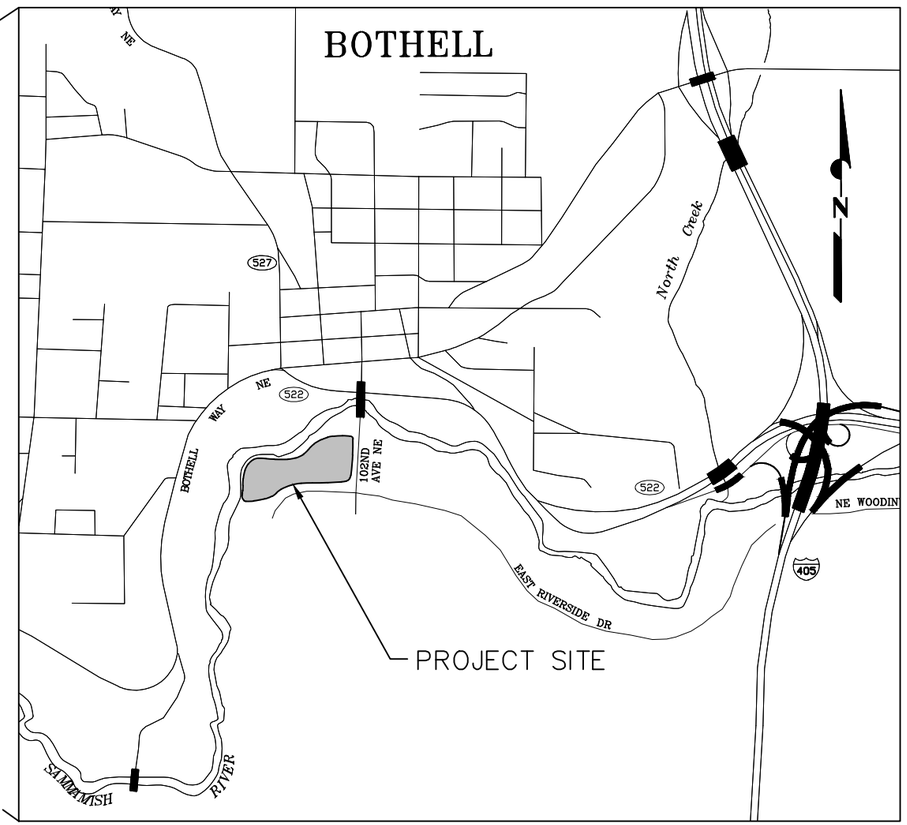

SITE MAP

SHEET INDEX

SHEET NAME	SHEET #
COVER SHEET	1
LEGEND, ABBREVIATIONS, SURVEY NOTES	2
SITE PLAN; ACCESS/STAGING PLAN; PROPERTY BOUNDARIES	3
TESC/DEWATERING PLANS	4
TRAIL DETOUR PLAN AND DETAILS	5
CULVERT PLANS	6
CULVERT SECTIONS I	7
CULVERT SECTIONS II	8
CULVERT CONNECTION/RAILING DETAILS	9
CHANNEL EXCAVATION PLAN	10
PROPOSED CHANNEL PROFILE	11
PROPOSED CHANNEL SECTIONS, LOG INSTALLATION DETAIL	12
FLOODPLAIN FILL/GRADING PLAN	13
PLANTING PLAN, DETAILS	14
PLANTING SPECIFICATIONS	15

47.7577 N lat./-122.2053 W long.

0 1"
BAR MEASURES ONE INCH ON ORIGINAL DRAWINGS

PAUL EDWARD DEVRIES — STATE OF WASHINGTON — 37861 — REGISTERED PROFESSIONAL ENGINEER

CITY OF BOTHELL NWS-2015-465

DESIGNED BY: PDV, GSA, KLF, KKM
DRAWN BY: PWH
CHECKED BY: BAJ
PROJECT MGR: PDV
FILENAME:

Resource Consultants, Inc.
REDMOND, WA.

SAMMAMISH RIVER
OFF-CHANNEL HABITAT RESTORATION

COVER SHEET

100% DESIGN

DATE: MAR 4, 2016
SHEET: 1
REV: –

FILED IN: Z:\2050_Bothell\Drawings\100percent_SammSideChannel_FULL SIZE_BidDraft_030416.dwg SAVED: Paul 3/4/2016 11:55 AM PLOTTED: Paul 3/4/2016 11:57 AM

SURVEY NOTES

SURVEY HORIZONTAL DATUM FOR THIS PROJECT IS WASHINGTON STATE PLANE NORTH ZONE COORDINATES, NORTH AMERICAN DATUM NAD83/07; VERTICAL DATUM IS NAVD88.

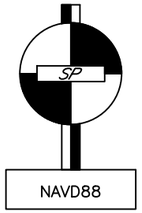

WSDOT SURVEY CONTROL POINT DATA

PROJECT CONTROL POINTS:	#1	#2
POINT ID#	R2 MON-1	R2 MON-2
NORTHING (FT)	279357.62	278761.23
EASTING (FT)	1302567.19	1302035.94
ELEVATION (FT; NAVD88)	25.56	23.86

DRAWING REFERENCES

THE DRAWINGS ARE REFERENCED IN THE FOLLOWING MANNER

SECTION CUT ON SHEET 5, SHOWN ON SHEET 7:

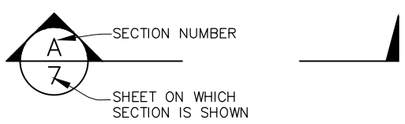

ON SHEET 7 THIS SECTION IS DEFINED AS:

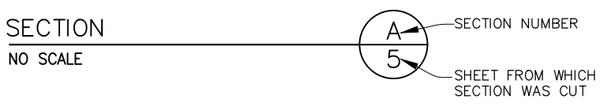

DETAILS ARE CROSS REFERENCED IN A SIMILAR MANNER.

SPECIFICATIONS NOTE

WSDOT 2014 STANDARD SPECIFICATIONS W/ AMENDMENTS APPLY WHERE CALLED OUT.

LEGEND

- APPROXIMATE PARCEL LINES
- PRESENT SAMMAMISH RIVER ALIGNMENT
- 23 EXISTING CONTOURS
- 23 PROPOSED CONTOURS
- CHAIN LINK FENCING
- SF SF SILT FENCING
- EXCAVATION LIMITS
- WATER SURFACE ELEVATION
- SIGNIFICANT TREE
- SURVEY CONTROL POINT
- EXISTING TRAIL
- TEMPORARY CLOSED TRAIL
- TRAIL DETOUR
- CONSTRUCTION ENTRANCE
- STAGING AREA
- POOL
- CUT
- FILL
- UNDISTURBED EARTH
- GRAVEL/ROCK FILL
- WOOD
- ASPHALT
- CRUSHED ROCK

ABBREVIATIONS

BM	BENCH MARK
CG	CENTER OF GRAVITY
CL, ℄	CENTERLINE
CP	CONTROL POINT
CS	CROSS SECTION
CY	CUBIC YARD
DBH	DIA AT BREAST HEIGHT
DIA	DIAMETER
DS, D/S	DOWNSTREAM
DSEL	DOWNSTREAM ELEVATION
DWG	DRAWING
E	EAST
EA	EACH
ELEV, EL	ELEVATION
ELJ	ENGINEERED LOG JAM
EXIST	EXISTING
FIRM	FLOOD INSURANCE RATE MAP
FT	FOOT, FEET
HPA	HYDRAULIC PROJECT APPROVAL
ID	IDENTIFICATION, INNER DIA
IN	INCH, INCHES
LB	POUNDS
LT	LEFT
LF	LINEAR FOOT
LWD	LARGE WOODY DEBRIS
MAX	MAXIMUM
MIN	MINIMUM
MISC	MISCELLANEOUS
MON	MONUMENT
N	NORTH
NO	NUMBER
NTS	NOT TO SCALE
OC	ON CENTER
OHWL	ORDINARY HIGH WATER LEVEL
OHWM	ORDINARY HIGH WATER MARK
RT	RIGHT
S	SLOPE, SOUTH
SHT	SHEET
SP	STATE PLANE COORDINATES
SPEC	SPECIFICATION
STA	STATION
STD	STANDARD
SF	SQUARE FOOT
SY	SQUARE YARD
TESC	TEMPORARY EROSION AND SEDIMENT CONTROL
TYP	TYPICAL
USEL	UPSTREAM ELEVATION
VAR	VARIES
VERT	VERTICAL
W	WEST, WIDE
W/	WITH
WM	WATER MARK
W/O	WITHOUT
WSDOT	WA DEPT OF TRANSPORTATION
WSEL	WATER SURFACE ELEVATION
WT	WEIGHT
YR	YEAR

FILED IN: Z:\2050_Bothell\Drawings\100percent_SammSideChannel_FULL SIZE_BldDraft_030416.dwg SAVED: Paul 3/4/2016 11:55 AM PLOTTED: Paul 3/4/2016 11:57 AM

0 1"
BAR MEASURES ONE INCH ON ORIGINAL DRAWINGS

PAUL EDWARD DEVRIES
STATE OF WASHINGTON
37861
REGISTERED PROFESSIONAL ENGINEER

CITY OF BOTHELL NWS-2015-465

DESIGNED BY: PDV, GSA, KLF, KKM
DRAWN BY: PWH
CHECKED BY: BAJ
PROJECT MGR: PDV
FILENAME:

Resource Consultants, Inc.
REDMOND, WA.

SAMMAMISH RIVER
OFF-CHANNEL HABITAT RESTORATION

LEGEND, ABBREVIATIONS, SURVEY NOTES
100% DESIGN

DATE: MAR 4, 2016
SHEET: 2
REV: –

RECOMMENDED CONSTRUCTION SEQUENCING:

1. INITIATE TRAFFIC CONTROL AND TESC/DEWATERING PLAN.
2. ESTABLISH CONSTRUCTION SURVEY CONTROL.
3. PREPARE AND SECURE STAGING AREAS AND STABILIZED ENTRANCES.
4. CLEAR AND GRUB ACCESS ROUTES, NEW CHANNEL EXCAVATION ROUTE; PLACE WETLAND MATS AND LAY DOWN LOGS IN SWALES AS NEEDED TO PREVENT EXCESSIVE RUTTING BY EQUIPMENT.
5. CUT REED CANARY GRASS AND BLACKBERRIES IN AREAS TO BE RESTORED. DISPOSE OF OFFSITE AT APPROVED LOCATION.
6. INSTALL TEMPORARY TRAIL DETOURS AND FENCING.
7. HAUL CULVERTS, ROCK/BORROW TO STAGING AREAS.
8. PLACE DOWNSTREAM SAND BAG COFFERDAM PER SHEET 4.
9. EXCAVATE CHANNEL CONNECTION DOWNSTREAM OF DOWNSTREAM CULVERT.
10. EXCAVATE AND INSTALL DOWNSTREAM CULVERT AND TRANSITION LOGS; PUMP WATER TO DESIGNATED INFILTRATION AREAS.
11. RESTORE SITE IN VICINITY OF DOWNSTREAM CULVERT AND CHANNEL CONNECTION.
12. PLACE UPSTREAM SAND BAG COFFERDAMS PER SHEET 4.
13. EXCAVATE AND INSTALL UPSTREAM CULVERT DURING JULY 16–31 IN–WATER WORK WINDOW, AND TRANSITION LOGS; PUMP WATER TO DESIGNATED DEPRESSION AREA.
14. INSTALL SAND BAGS INSIDE CULVERT PER SHEET 4.
15. RESTORE DISTURBED AREAS ALONG TRAIL.
16. REMOVE TEMPORARY DETOUR.
17. BEGIN EXCAVATION OF NEW CHANNEL ABOVE DOWNSTREAM CULVERT, HAUL SPOILS AND DISPOSE ONSITE PER PLANS; ENSURE EFFECTIVE DEWATERING; USE WETLAND MATS AS NEEDED FOR EQUIPMENT ROUTE PROTECTION.
18. SPOILS SHALL BE DISPOSED OF IN SINGLE 1.5 FT OR 2 FT THICK LAYERS PER GRADING PLAN, STARTING AT SOUTH FILL LIMITS AND PROGRESSING NORTH AND EAST, WITHOUT TRACKING EQUIPMENT OVER THE PLACED MATERIAL; LEAVE AN ACCESS ROUTE ALONG NORTH PERIMETER OF FILL AREA FOR EQUIPMENT TO LEAVE SITE AT END OF EXCAVATION.
19. EXCAVATE CHANNEL WORKING IN UPSTREAM DIRECTION TO ~STA 9+75; INSTALL LOGS WITH ROOTWADS IN POOLS AS EXCAVATION PROCEEDS; USE SAND BAGS TO ISOLATE WORK AREA PROGRESSIVELY FROM PREVIOUSLY EXCAVATED CHANNEL REACH, WORKING INCREMENTALLY IN 50 FT OR APPROVED ALTERNATIVE LENGTH SEGMENTS; ENSURE EFFECTIVE DEWATERING TO PREVENT SIDEWALL SLOUGHING.
20. EXCAVATE CHANNEL WORKING IN DOWNSTREAM DIRECTION FROM UPSTREAM CULVERT TO ~STA 10+25, HAUL SPOILS AND DISPOSE ONSITE PER GRADING PLAN; ENSURE EFFECTIVE DEWATERING.
21. COMPLETE CHANNEL EXCAVATION BETWEEN ~STA 9+75 AND STA 10+25, HAUL SPOILS AND DISPOSE ONSITE PER GRADING PLAN; ENSURE EFFECTIVE DEWATERING.
22. REMOVE WETLAND MATS AND LOGS AS EQUIPMENT LEAVES EXCAVATION AREA.
23. REMOVE SAND BAGS AT DOWNSTREAM AND UPSTREAM ENDS OF CONSTRUCTION LIMITS, LEAVE SAND BAGS IN CULVERTS IN PLACE.
24. PREPARE PLANTING SURFACES, MULCH, ETC.
25. INSTALL PLANTS PER PLANTING PLAN SPECIFICATIONS.
26. RESTORE SITE AT CONSTRUCTION ENTRANCE, STAGING AND ACCESS LOCATIONS.
27. REMOVE SAND BAGS INSIDE UPSTREAM CULVERT THE FOLLOWING YEAR AFTER CONSTRUCTION, IN LATE SUMMER AFTER RIVER LEVEL DROPS BELOW CULVERT INVERT ELEVATION PER APPROVAL OF ENGINEER OF RECORD.

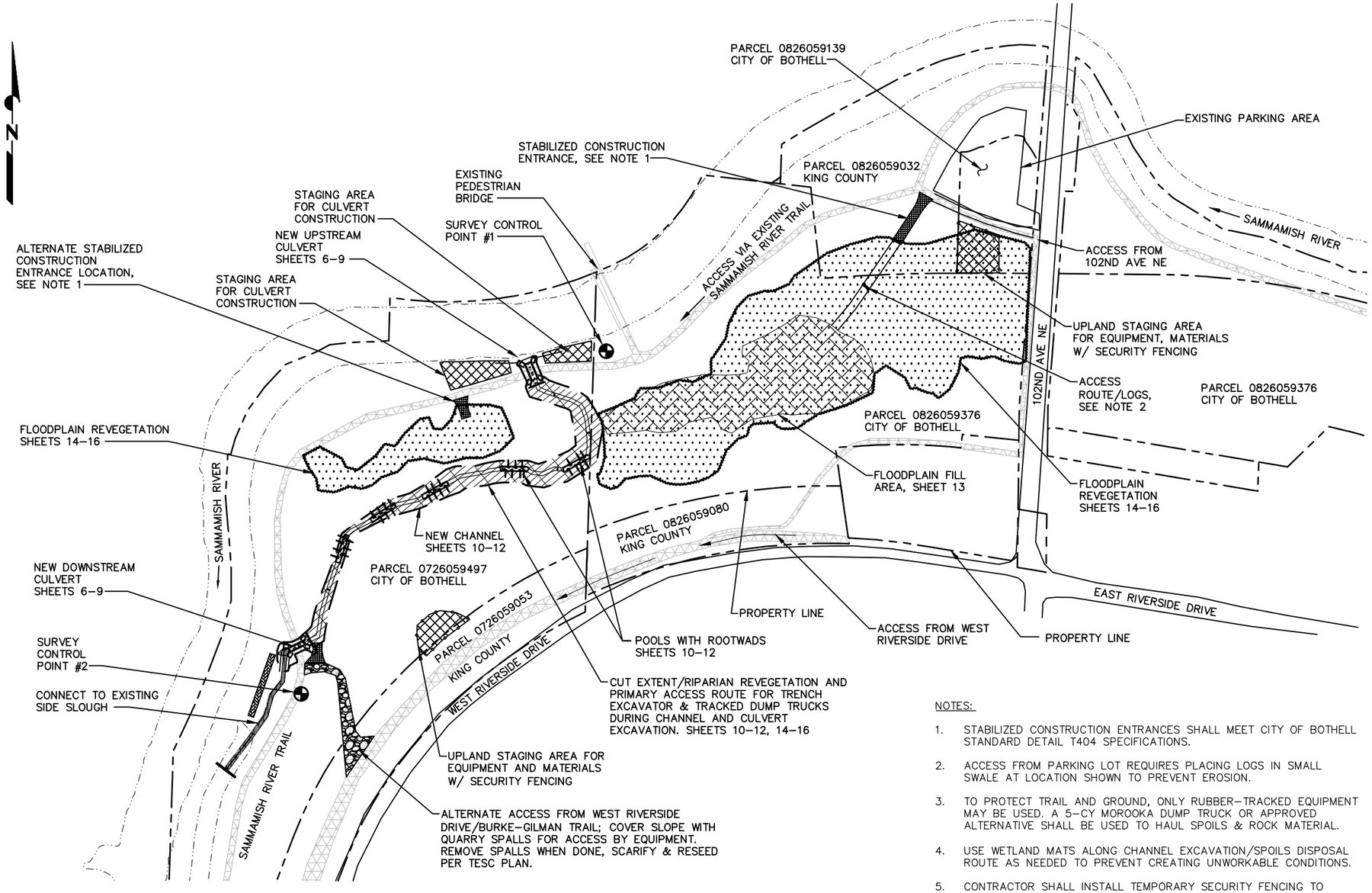

PLAN VIEW

100 0 50 100
SCALE: 1"= 100'

NOTES:

1. STABILIZED CONSTRUCTION ENTRANCES SHALL MEET CITY OF BOTHELL STANDARD DETAIL T404 SPECIFICATIONS.
2. ACCESS FROM PARKING LOT REQUIRES PLACING LOGS IN SMALL SWALE AT LOCATION SHOWN TO PREVENT EROSION.
3. TO PROTECT TRAIL AND GROUND, ONLY RUBBER–TRACKED EQUIPMENT MAY BE USED. A 5–CY MOROOKA DUMP TRUCK OR APPROVED ALTERNATIVE SHALL BE USED TO HAUL SPOILS & ROCK MATERIAL.
4. USE WETLAND MATS ALONG CHANNEL EXCAVATION/SPOILS DISPOSAL ROUTE AS NEEDED TO PREVENT CREATING UNWORKABLE CONDITIONS.
5. CONTRACTOR SHALL INSTALL TEMPORARY SECURITY FENCING TO SECURE STAGING AREAS. CHAIN LINK FENCE SHALL FOLLOW WSDOT SPECIFICATION 8–12 AND STANDARD PLAN FS–1.1.
6. CONTRACTOR SHALL NOT DAMAGE TRAIL OR OTHER PUBLIC PROPERTY, AND SHALL BE SUBJECT to WSDOT SPECIFICATION 1–07.16.

0 1"
BAR MEASURES ONE INCH ON ORIGINAL DRAWINGS

PAUL EDWARD DEVRIES
STATE OF WASHINGTON
37861
REGISTERED PROFESSIONAL ENGINEER

CITY OF BOTHELL NWS-2015-465

DESIGNED BY: PDV, GSA, KLF, KKM
DRAWN BY: PWH
CHECKED BY: BAJ
PROJECT MGR: PDV
FILENAME:

Resource Consultants, Inc.
REDMOND, WA.

SAMMAMISH RIVER
OFF–CHANNEL HABITAT RESTORATION

SITE PLAN; ACCESS/STAGING
PROPERTY BOUNDARIES
100% DESIGN

DATE: MAR 4, 2016
SHEET: 3
REV: –

FILED IN: Z:\2050_Bothell\Drawings\100percent_SammiSideChannel_FULL SIZE_BidDraft_030416.dwg SAVED: Paul 3/4/2016 11:55 AM PLOTTED: Paul 3/4/2016 11:57 AM

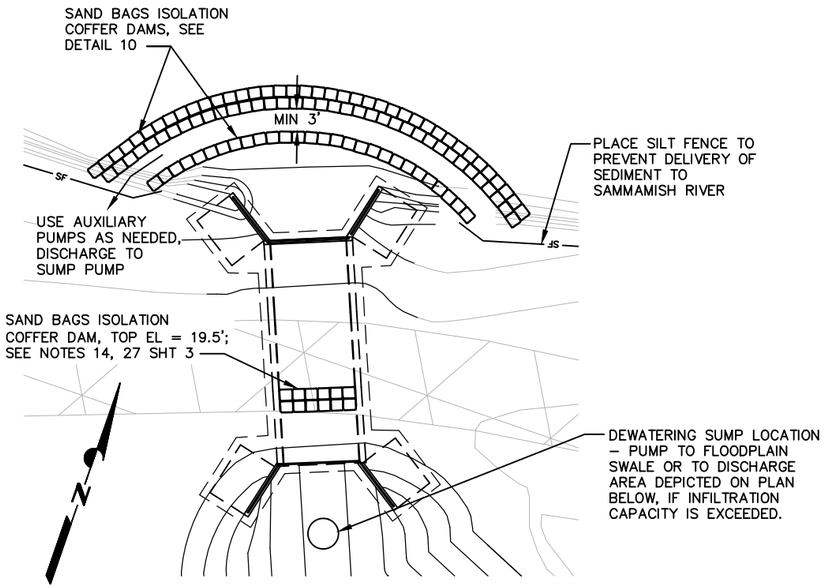

TESC & WATER MANAGEMENT PLAN (–/–)

UPSTREAM CULVERT

10 0 5 10
SCALE: 1"= 10'

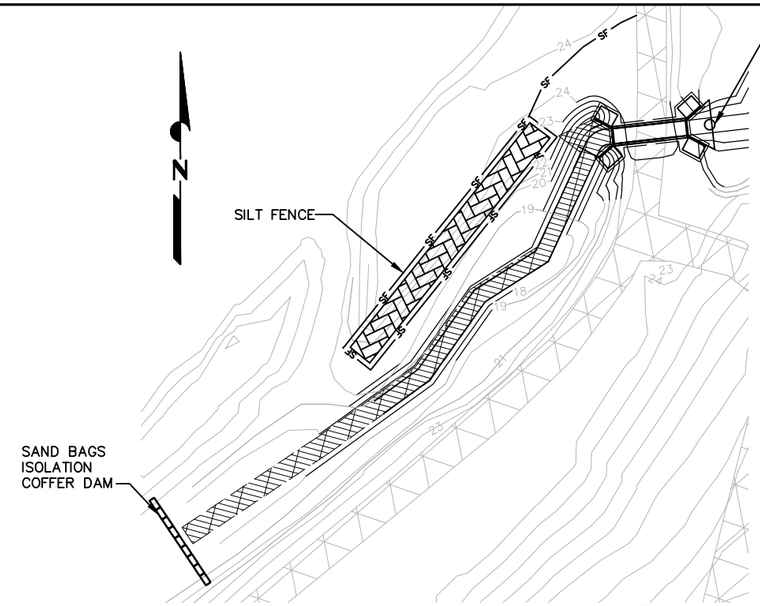

TESC & WATER MANAGEMENT PLAN (–/–)

DOWNSTREAM CULVERT

30 0 15 30
SCALE: 1"= 30'

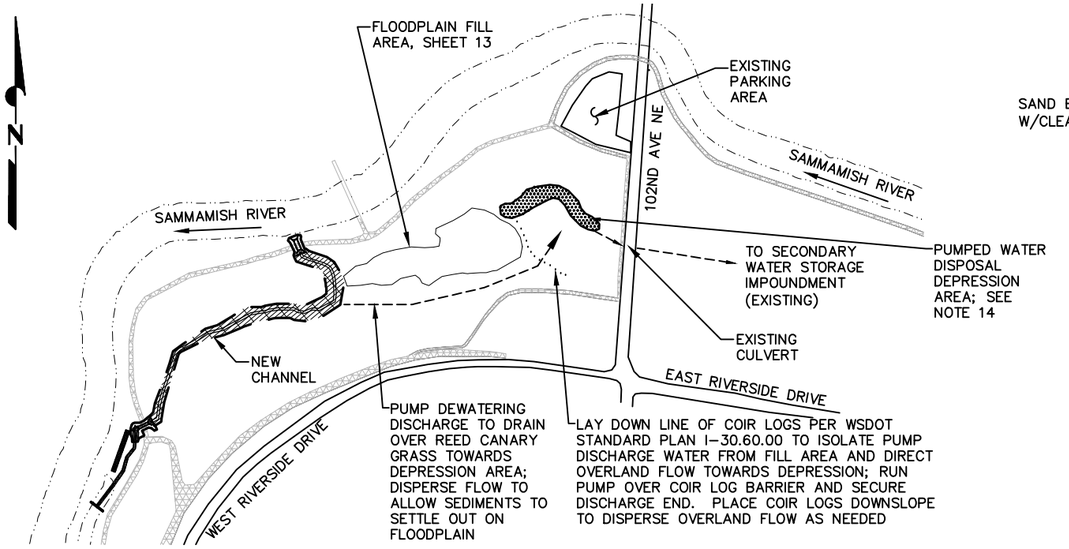

PLAN VIEW – PUMPED WATER DISCHARGE

200 0 100 200
SCALE: 1"= 200'

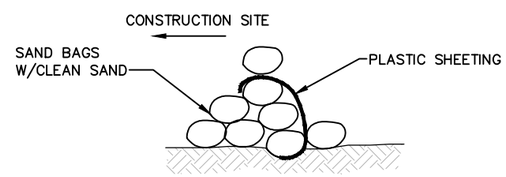

DETAIL (10/–)

SAND BAG COFFER DAM, NTS

TEMPORARY EROSION AND SEDIMENT CONTROL NOTES:

1. ALL UPSTREAM CULVERT EXCAVATION AND INSTALLATION WORK WILL BE CONDUCTED PER US ARMY CORPS OF ENGINEERS PROGRAMMATIC IN-WATER WORK TIMING WINDOW FOR THE SAMMAMISH RIVER OF JULY 16-31.
2. THE IMPLEMENTATION OF THESE TESC PLANS AND THE CONSTRUCTION, MAINTENANCE, REPLACEMENT, AND UPGRADING OF THESE TESC FACILITIES SHALL BE REVIEWED AND SUPERVISED BY AN INDIVIDUAL WITH CESCL CERTIFICATION AND EXPERIENCE IN IMPLEMENTING TESC PLANS.
3. BOUNDARIES OF CLEARING LIMITS IN VEGETATION AREAS SHALL BE CLEARLY FLAGGED WITH SURVEY TAPE BY ENGINEER OF RECORD PRIOR TO CONSTRUCTION; DURING CONSTRUCTION PERIOD, NO DISTURBANCE BEYOND THE CLEARING LIMITS SHALL BE PERMITTED WITHOUT AUTHORIZATION OF OWNER PROJECT MANAGER. THE CLEARING LIMITS SHALL BE MAINTAINED BY CONTRACTOR FOR THE DURATION OF CONSTRUCTION.
4. THE TESC FACILITIES SHOWN ON THIS PLAN MUST BE CONSTRUCTED PRIOR TO OR IN CONJUNCTION WITH ALL CLEARING AND GRADING SO AS TO ENSURE THAT THE TRANSPORT OF SEDIMENT TO SURFACE WATERS, AND ADJACENT PROPERTIES IS PREVENTED.
5. THE TESC FACILITIES SHOWN ON THIS PLAN ARE THE MINIMUM REQUIREMENTS FOR THE ANTICIPATED SITE CONDITIONS. DURING THE CONSTRUCTION PERIOD THESE TESC FACILITIES SHALL BE UPGRADED BY CONTRACTOR AND APPROVED BY THE ENGINEER AS NEEDED FOR UNEXPECTED STORM EVENTS AND MODIFIED TO ACCOUNT FOR CHANGING SITE CONDITIONS (E.G., SUMP PUMP, INSTALLATION/RELOCATION OF SILT FENCES, ETC.)
6. THE TESC FACILITIES SHALL BE INSPECTED DAILY AND MAINTAINED BY CONTRACTOR TO ENSURE CONTINUED PROPER FUNCTIONING. THE TESC FACILITIES ON INACTIVE SITES SHALL BE INSPECTED AND MAINTAINED A MINIMUM OF ONCE A WEEK OR WITHIN 48 HOURS OF FOLLOWING A STORM EVENT.
7. SILT FENCE SHALL FOLLOW CITY OF BOTHELL STANDARD DETAIL T409 AND SHALL ALSO FOLLOW THESE SPECIFICATIONS:
   - FABRIC SHALL BE EQUAL TO "MIRAFI" WITH 100LB GRAB TENSILE STRENGTH
   - 200 PSI BURST STRENGTH AND 70-200 SIEVE # APPARENT OPENING
8. WHERE TEMPORARY EROSION CONTROL IS REQUIRED STRAW MULCH SHALL BE APPLIED AT A MINIMUM 2-INCH THICKNESS.
9. ALL CONSTRUCTION MATERIALS, WASTE MATERIALS, AND DEMOLITION DEBRIS SHALL BE HANDLED AND DISPOSED OF IN A MANNER SO AS TO PREVENT CONTAMINATION OF STORMWATER RUNOFF AND ADJACENT WATERWAYS.
10. MAINTENANCE AND FUELING OF CONSTRUCTION EQUIPMENT SHALL BE PERFORMED AT UPLAND STAGING AREA AND IN SUCH A MANNER TO PREVENT THE POTENTIAL CONTAMINATION OF STORMWATER RUNOFF AND ADJACENT WATERWAYS. SPILL CONTAINMENT AND CLEANUP KITS SHALL BE MAINTAINED ONSITE AND ANY SPILLS OF FUELS, HYDRAULIC FLUID (VEGETABLE OIL REQUIRED), LUBRICANTS, OR OTHER HAZARDOUS MATERIAL SHALL BE CLEANED UP AND IMMEDIATELY AND DISPOSED OF PROPERLY.
11. EROSION CONTROL WILL MEET ALL WSDOT DESIGN AND CONSTRUCTION STANDARDS.
12. ALL DISTURBED AREAS SHALL BE SEEDED AT END OF CONSTRUCTION WITH WSDOT NO CLOVER EROSION CONTROL MIX, APPLICATION RATE 80 LB/ACRE, UNLESS OTHERWISE SPECIFIED ON SHEET 15 FOR REVEGETATION.
13. CHANGES MUST BE APPROVED BY ENGINEER AND OWNER PROJECT MANAGER.

DEWATERING NOTES:

14. ALL CHANNEL AND CULVERT EXCAVATION REQUIRES LOCAL DEWATERING. WATER HANDLING ON SITE CAN BE PERFORMED BY USE OF A SUMP AND 6" PUMP DISCHARGING TO DRAIN OVER REED CANARY GRASS TOWARDS DEPRESSION AREA INDICATED ON THIS SHEET. THERE SHALL BE A BACKUP PUMP AVAILABLE ON THE PROJECT SITE. DEPRESSION STORAGE VOLUME IS ESTIMATED TO BE SUFFICIENT FOR ALL PUMPED WATER AS-IS, BUT CONTRACTOR SHALL USE SAND BAGS W/PLASTIC SHEATHING PER DETAIL 10 TO PROVIDE FREEBOARD AS NEEDED. IF NECESSARY, USE BACKUP PUMP TO DISCHARGE EXCESS WATER TO IMPOUNDED AREA TO EAST OF 102ND AVE NE, VIA CULVERT.
15. CONTRACTOR SHALL HAVE BIOBAGS ON SITE AS BACKUP IF PUMPING OF DIRTY WATER EXCEEDS FLOODPLAIN INFILTRATION AND/OR STORAGE CAPACITY.
16. CONTRACTOR SHOULD ASSESS SITE CONDITIONS AND MAY PROPOSE ALTERNATIVE WATER MANAGEMENT PLAN FOR APPROVAL BY CITY ENGINEER.

0 1"
BAR MEASURES ONE INCH ON ORIGINAL DRAWINGS

PAUL EDWARD DEVRIES — STATE OF WASHINGTON — 37861 — REGISTERED PROFESSIONAL ENGINEER

CITY OF BOTHELL NWS-2015-465

DESIGNED BY: PDV, GSA, KLF, KKM
DRAWN BY: PWH
CHECKED BY: BAJ
PROJECT MGR: PDV
FILENAME:

Resource Consultants, Inc.
REDMOND, WA.

SAMMAMISH RIVER
OFF-CHANNEL HABITAT RESTORATION

TESC/DEWATERING PLANS

100% DESIGN

DATE: MAR 4, 2016
SHEET: 4
REV: –

FILED IN: Z:\2050_Bothell\Drawings\100percent_SammiSideChannel_FULL SIZE_BidDraft_030416.dwg SAVED: Paul 3/4/2016 11:55 AM PLOTTED: Paul 3/4/2016 11:58 AM

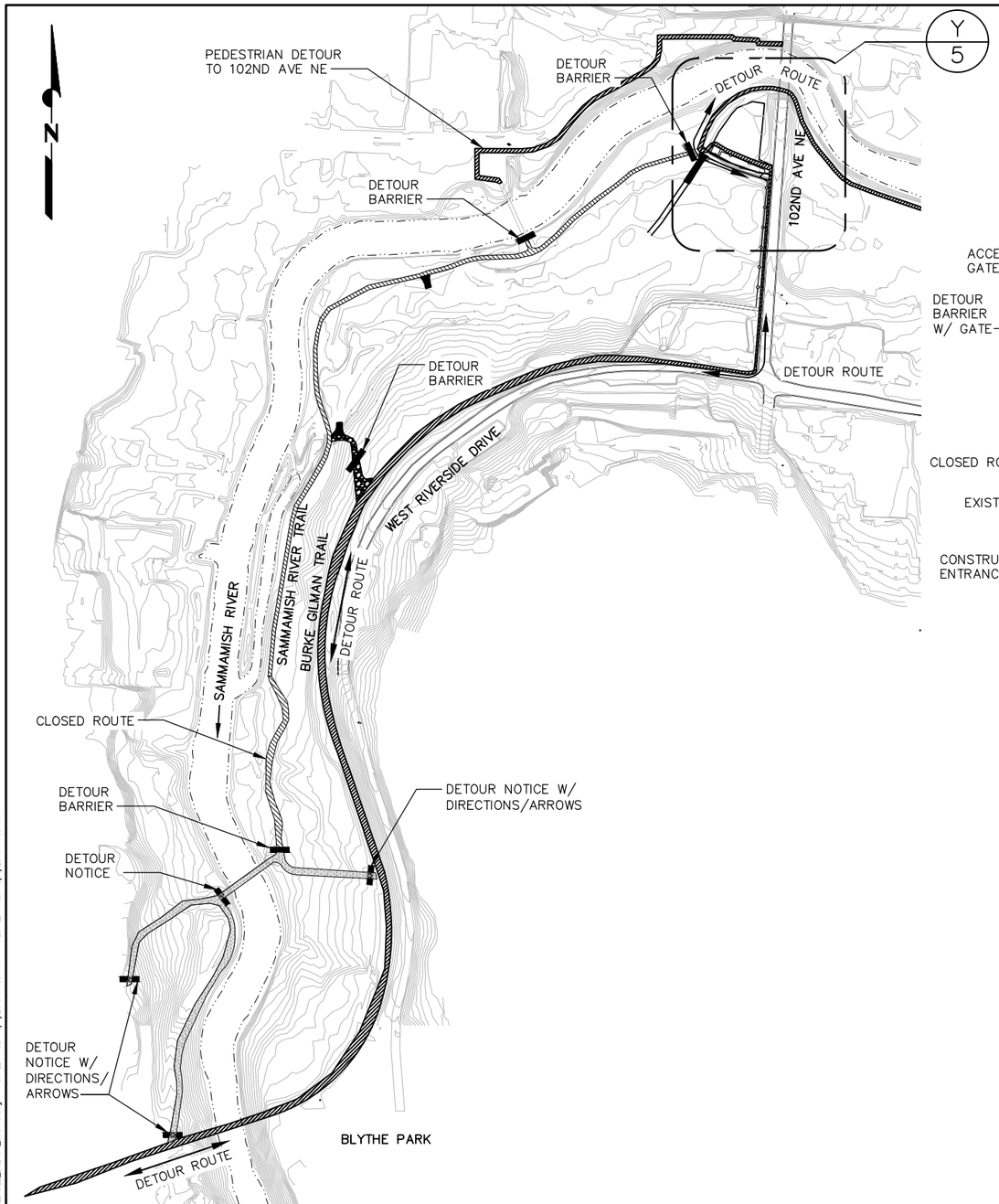

DETOUR PLAN

200 0 100 200

SCALE: 1"= 200'

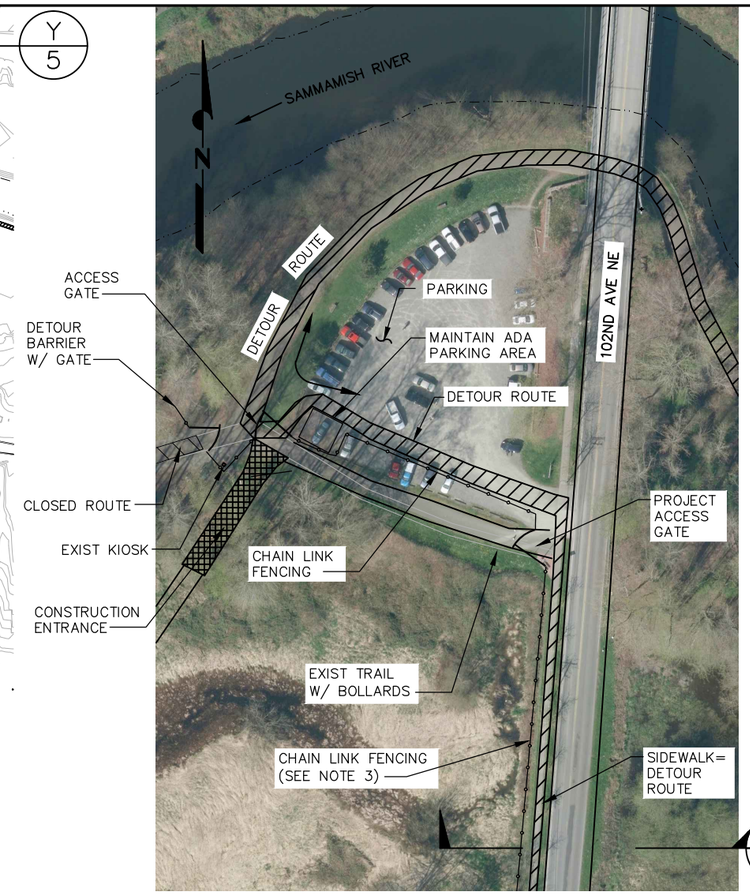

PARKING LOT ACCESS PLAN Y/5

50 0 25 50

SCALE: 1"= 50'

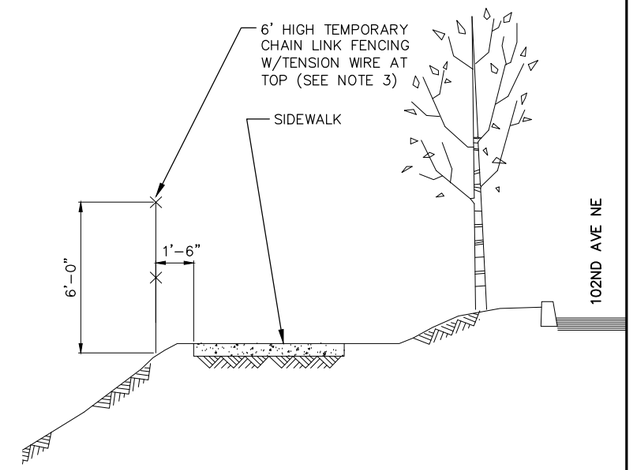

SECTION 0/5

102ND AVE NE SIDEWALK FENCING (NTS)

NOTES:

1. TRAIL DETOUR HAS BEEN DEVELOPED IN CONSULTATION WITH KING COUNTY PARKS DEPARTMENT. ANY CHANGES TO PLAN MUST BE APPROVED BY BOTH CITY OF BOTHELL AND KING COUNTY.
2. CONTRACTOR TO PREPARE TRAIL AND STREET TRAFFIC MANAGEMENT PLAN AND SUBMIT TO CITY OF BOTHELL FOR APPROVAL, CONSISTENT WITH WSDOT SPECIFICATION 1-10.2(2).
3. TO PREVENT DETOUR TRAVELERS AND PEDESTRIANS FROM FALLING DOWN SIDE SLOPE ON WEST SIDE OF 102ND AVE NE SIDEWALK, A TEMPORARY CHAIN LINK FENCING SHALL BE INSTALLED PER WSDOT SPECIFICATION 8-12 AND STANDARD PLAN FS-1.1. FENCING SHALL EXTEND FROM DETOUR BARRIER WEST OF PARKING LOT TO DRIVEWAY OPPOSITE CITY SEWER PUMP FACILITY. FENCING SHALL BE MAINTAINED UNTIL FLOODPLAIN EARTHWORK IS COMPLETE.
4. DETOUR BARRIERS SHALL BE CONSTRUCTED USING CHAIN LINK FENCING AND GATES PER WSDOT SPECIFICATION 8-12 AND STANDARD PLAN FS-1.1. BARRIER SHALL EXTEND TO VEGETATION OR BRIDGE RAILING AT EACH END.
5. DETOUR NOTICES SHALL BE INSTALLED WITH A CITY OF BOTHELL TYPE 3 BARRIER, PER STANDARD DETAIL 713.

0 1"

BAR MEASURES ONE INCH ON ORIGINAL DRAWINGS

PAUL EDWARD DEVRIES — STATE OF WASHINGTON — 37861 — REGISTERED PROFESSIONAL ENGINEER

CITY OF BOTHELL NWS-2015-465

DESIGNED BY: PDV, GSA, KLF, KKM
DRAWN BY: PWH
CHECKED BY: BAJ
PROJECT MGR: PDV
FILENAME:

Resource Consultants, Inc.
REDMOND, WA.

SAMMAMISH RIVER
OFF-CHANNEL HABITAT RESTORATION

TRAIL DETOUR PLAN AND DETAILS
100% DESIGN

DATE: MAR 4, 2016
SHEET: 5
REV: –

FILED IN: Z:\2050_Bothell\Drawings\10Percent_SammiSideChannel_FULL SIZE_BidDraft_030416.dwg SAVED: Paul 3/4/2016 11:55 AM PLOTTED: Paul 3/4/2016 11:58 AM

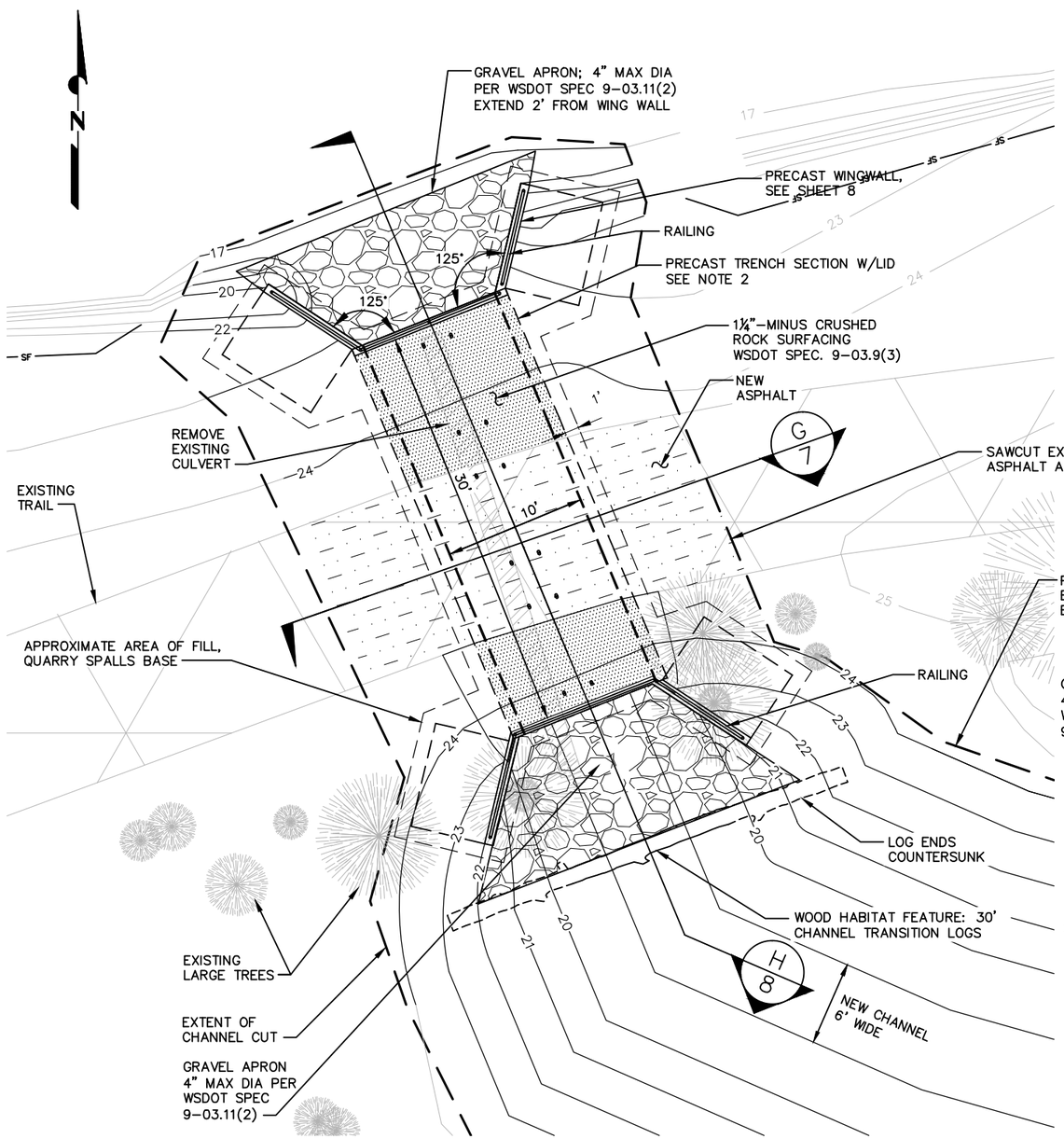

PLAN

UPSTREAM CULVERT

SCALE: 1"= 5'

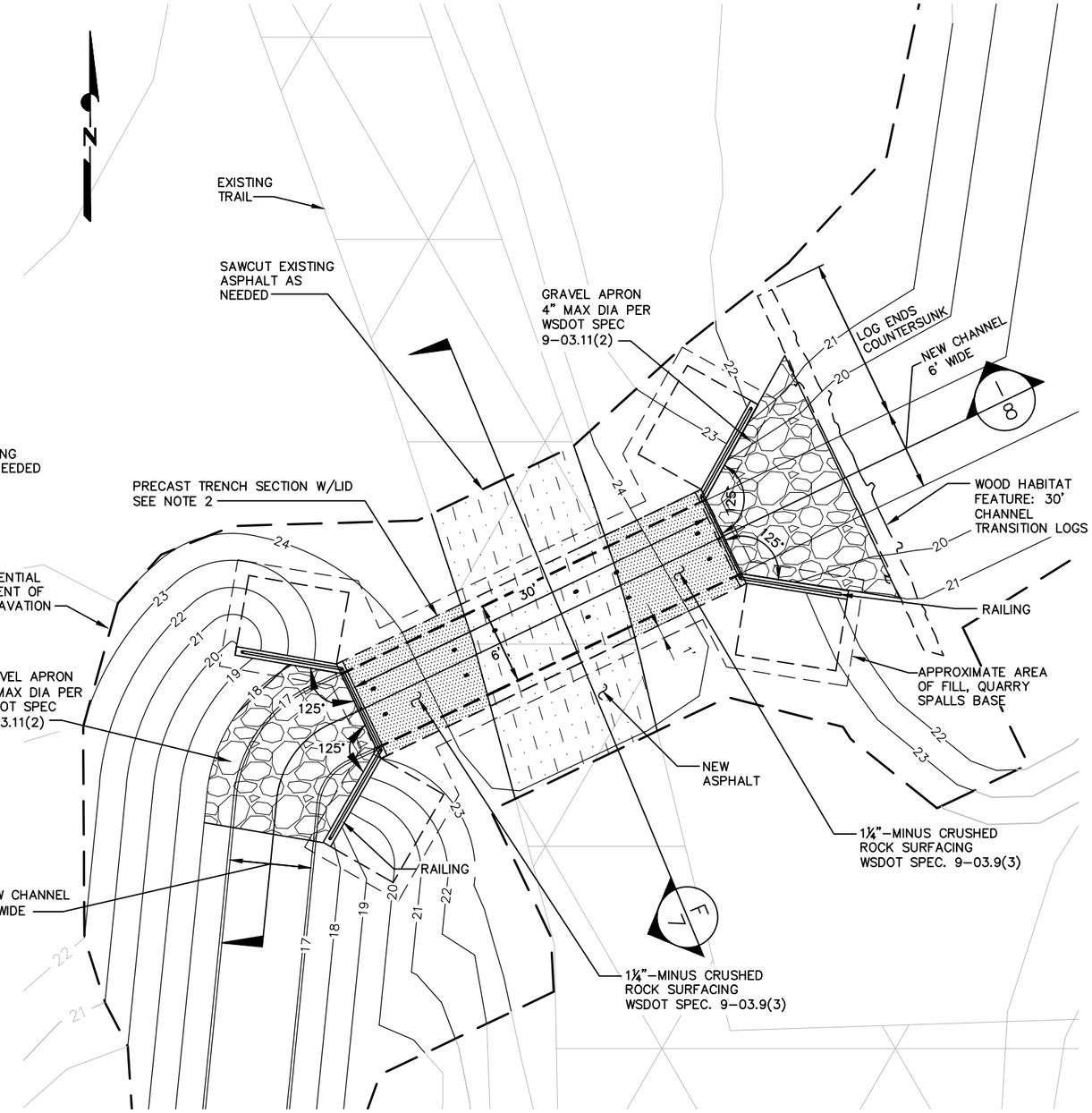

PLAN

DOWNSTREAM CULVERT

SCALE: 1"= 5'

NOTES:

1. ONLY REMOVE TREES WITHIN FOOTPRINT OF EXCAVATION, RESTRICT EQUIPMENT ACCESS, OR THAT POSE A SAFETY HAZARD TO WORK CREW.
2. CULVERTS SHALL BE PRECAST CONCRETE BOX TYPE WITH LIDS, AND MEET WSDOT SPEC 7-02. CULVERT SECTIONS MAY BE 5' OR 10' LONG.

0 1"

BAR MEASURES ONE INCH ON ORIGINAL DRAWINGS

PAUL EDWARD DEVRIES
STATE OF WASHINGTON
37861
REGISTERED PROFESSIONAL ENGINEER

CITY OF BOTHELL NWS-2015-465

DESIGNED BY: PDV, GSA, KLF, KKM
DRAWN BY: PWH
CHECKED BY: BAJ
PROJECT MGR: PDV
FILENAME:

Resource Consultants, Inc.
REDMOND, WA.

SAMMAMISH RIVER
OFF-CHANNEL HABITAT RESTORATION

CULVERT PLANS

100% DESIGN

DATE: MAR 4, 2016
SHEET: 6
REV: –

FILED IN: Z:\2050_Bothell\Drawings\100percent_SammSideChannel_FULL SIZE_BldDraft_030416.dwg SAVED: Paul 3/4/2016 11:55 AM PLOTTED: Paul 3/4/2016 11:58 AM

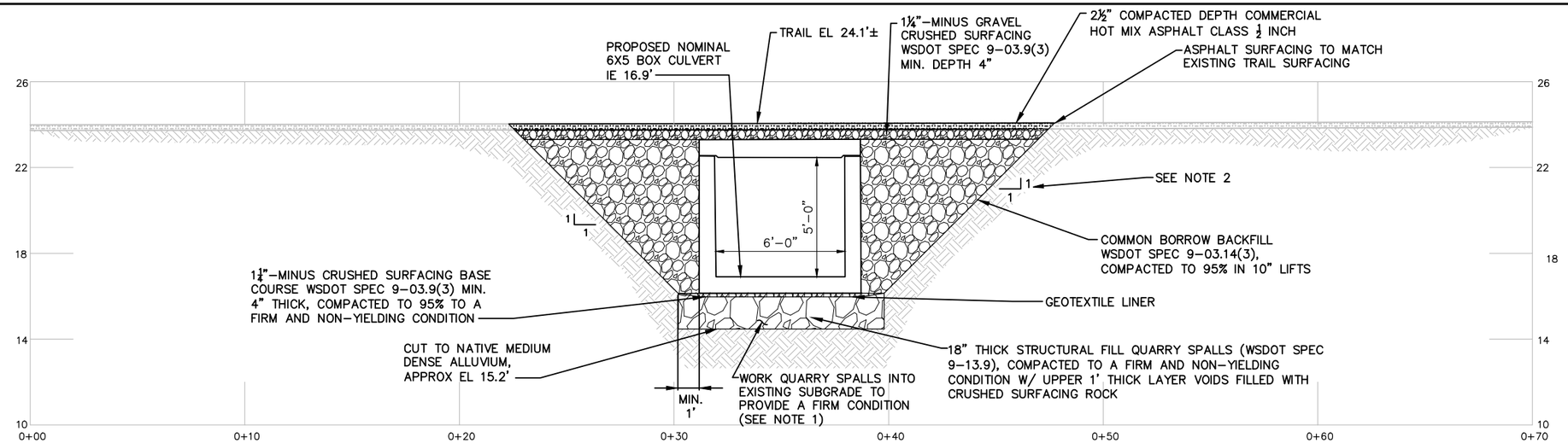

SECTION F/6

DOWNSTREAM CULVERT

SCALE: 1"= 3'

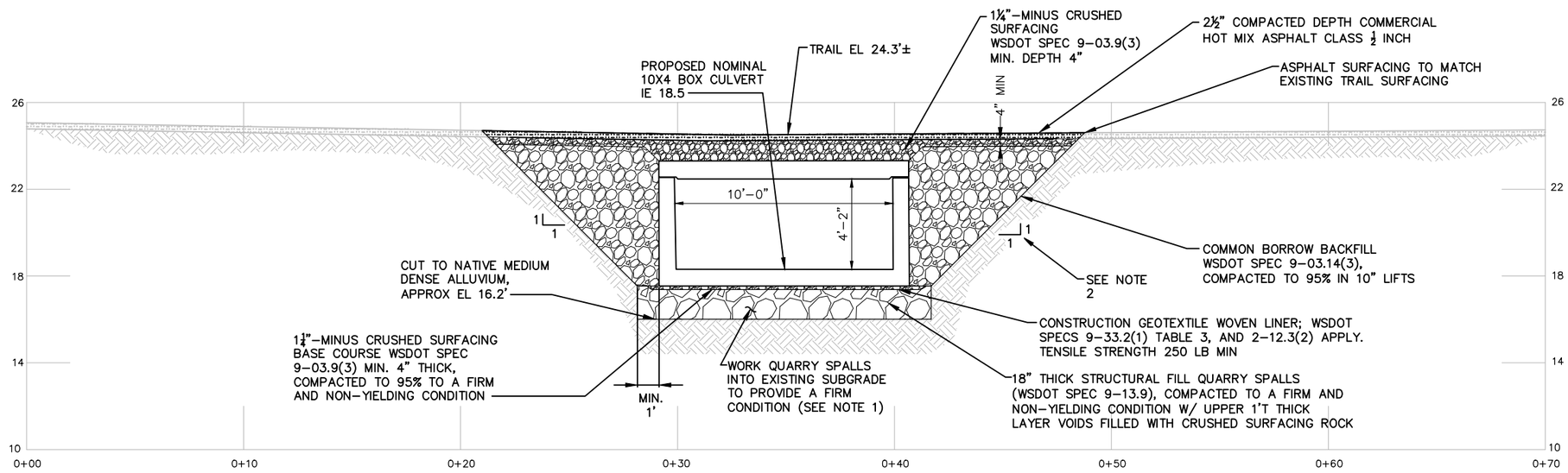

SECTION G/6

UPSTREAM CULVERT

SCALE: 1"= 3'

NOTES:

1. IF ORGANIC RICH ZONES ARE ENCOUNTERED IN EXISTING SUBGRADE AT THE DESIGN SUBGRADE ELEVATION THEY MUST BE REMOVED AND REPLACED WITH QUARRY SPALLS.
2. NO STANDING WATER SHALL BE PERMITTED AT THE TIME OF QUARRY SPALLS PLACEMENT.
3. A 1H:1V SIDE SLOPE IS SHOWN FOR REFERENCE THE CONTRACTOR SHOULD MAKE A DETERMINATION OF EXCAVATION SIDE SLOPES BASED ON CLASSIFICATION OF SOILS ENCOUNTERED AT THE TIME OF EXCAVATION. ADJUSTMENTS TO THE SLOPE ANGLES SHOULD BE DETERMINED BY THE CONTRACTOR AT THAT TIME. SHORING MAY ALSO BE USED. REMOVAL OF LARGE DIAMETER TREES LIKELY REQUIRED AT UPSTREAM CULVERT.

BAR MEASURES ONE INCH ON ORIGINAL DRAWINGS

PAUL EDWARD DEVRIES — STATE OF WASHINGTON — 37861 — REGISTERED PROFESSIONAL ENGINEER

CITY OF BOTHELL NWS-2015-465

DESIGNED BY: PDV, GSA, KLF, KKM
DRAWN BY: PWH
CHECKED BY: BAJ
PROJECT MGR: PDV
FILENAME:

Resource Consultants, Inc.
REDMOND, WA.

SAMMAMISH RIVER
OFF–CHANNEL HABITAT RESTORATION

CULVERT SECTIONS I

100% DESIGN

DATE: MAR 4, 2016
SHEET: 7
REV: –

FILED IN: Z:\2050_Bothell\Drawings\100percent_Sammi5dechannel_FULL SIZE_B&Dtrefl_030416.dwg SAVED: Paul 3/4/2016 11:55 AM PLOTTED: Paul 3/4/2016 11:58 AM

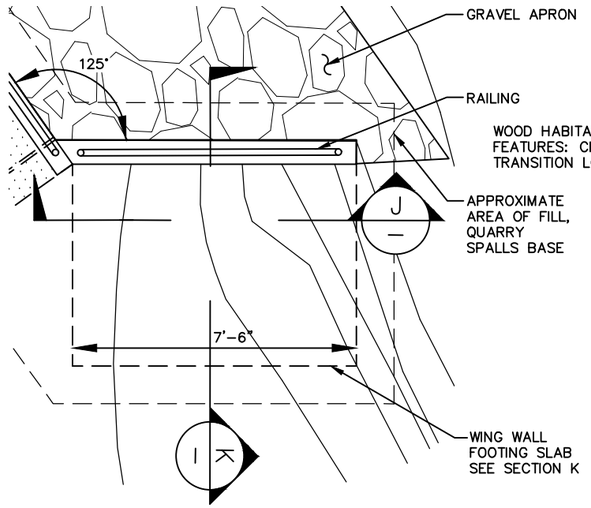

WING WALL PLAN

SCALE: 1"= 2'

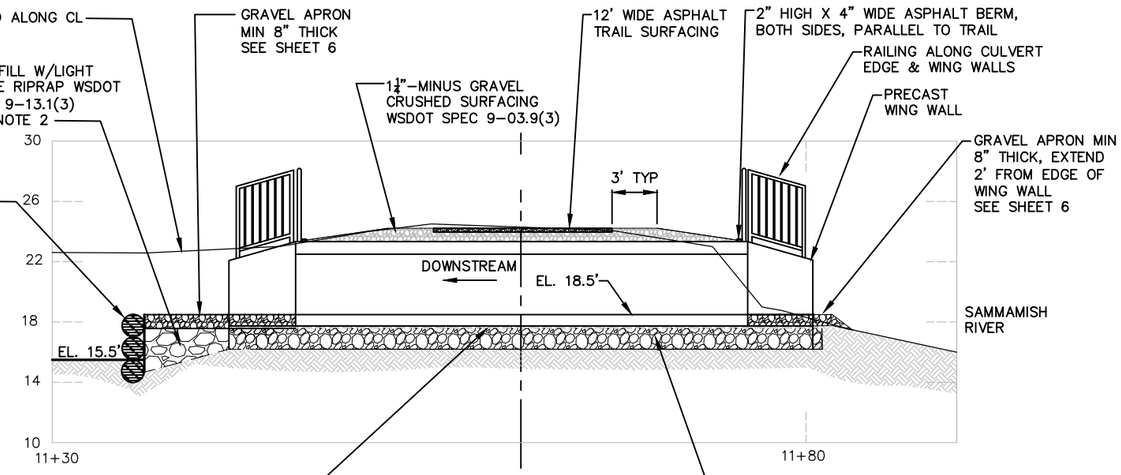

SECTION (STREAMWISE) H/6

UPSTREAM CULVERT

SCALE: 1"= 5'

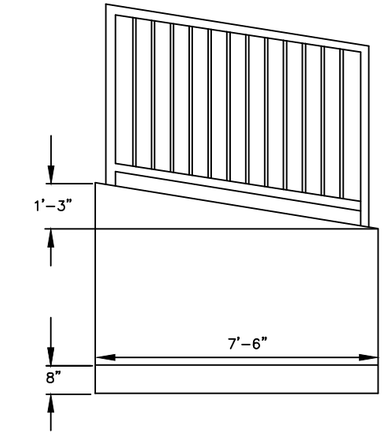

SECTION J/—

WING WALL, RAILING, TYP

SCALE: 1"= 2'

NOTES:

1. CONCRETE WING WALLS TO BE DESIGNED BY PRECAST CONTRACTOR. RAILING ON WING WALLS HAS SLANTED FOOTINGS MOUNTED FLUSH WITH WING WALL TOP, SUCH THAT BALLUSTERS ARE PLUMB VERTICAL, AND CROSS-RAILS ARE PARALLEL TO WING WALL TOP SURFACE

2. PLACE LIGHT LOOSE RIPRAP TO FILL ANY REMAINING EXCAVATED AREAS BETWEEN CULVERT STRUCTURES/QUARRY SPALLS BASE AND TRANSITIION LOGS. COVER W/ GRAVEL TO TARGET GRADES.

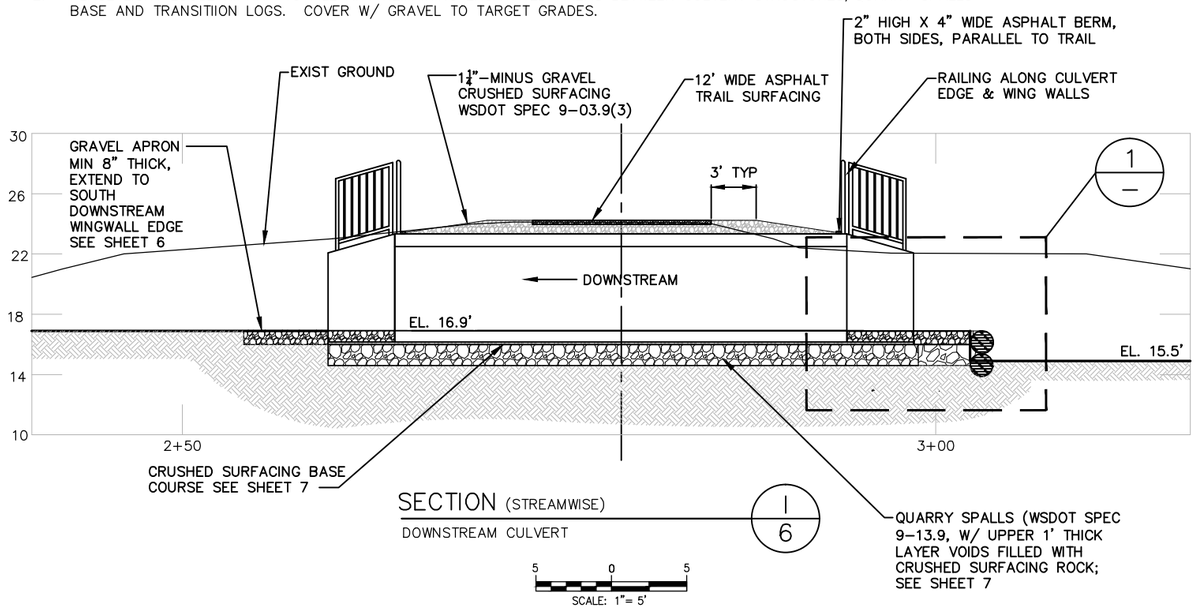

SECTION (STREAMWISE) I/6

DOWNSTREAM CULVERT

SCALE: 1"= 5'

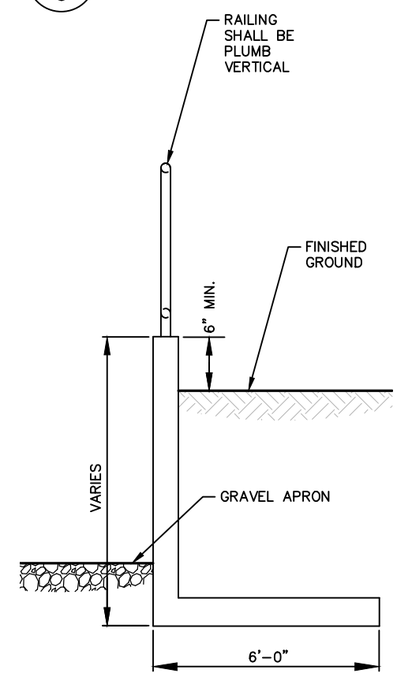

SECTION K/—

WING WALL, RAILING

SCALE: 1"= 2'

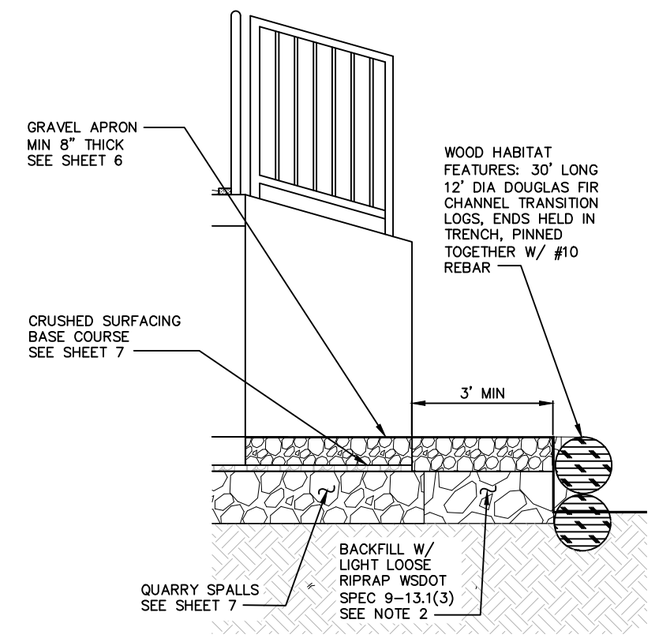

DETAIL 1/11,8

PRECAST TRENCH & LOGS

SCALE: 1"= 2'

BAR MEASURES ONE INCH ON ORIGINAL DRAWINGS

PAUL EDWARD DEVRIES — STATE OF WASHINGTON — 37861 — REGISTERED PROFESSIONAL ENGINEER

CITY OF BOTHELL NWS-2015-465

DESIGNED BY: PDV, GSA, KLF, KKM
DRAWN BY: PWH
CHECKED BY: BAJ
PROJECT MGR: PDV
FILENAME:

Resource Consultants, Inc.
REDMOND, WA.

SAMMAMISH RIVER
OFF-CHANNEL HABITAT RESTORATION

CULVERT SECTIONS II

100% DESIGN

DATE: MAR 4, 2016
SHEET: 8
REV: —

FILED IN: Z:\2050_Bothell\Drawings\100percent_SammSideChannel_FULL SIZE_BidDraft_020416.dwg SAVED: Paul 3/4/2016 11:55 AM PLOTTED: Paul 3/4/2016 11:58 AM

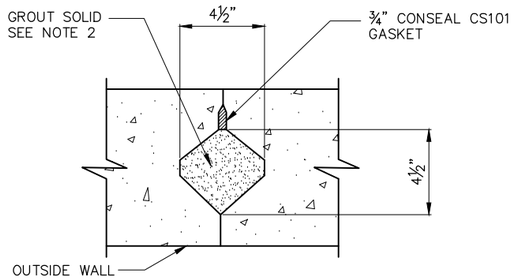

WALL GROUT DETAIL, TYP (2/–)

SCALE: 3"=1'-0"

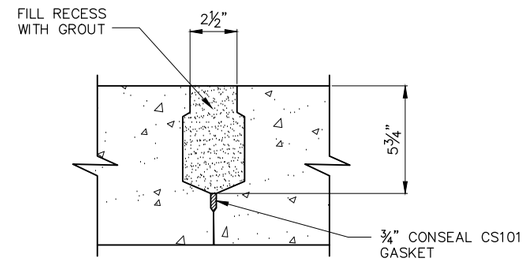

TOP SEAM DETAIL, TYP (3/–)

SCALE: 3"=1'-0"

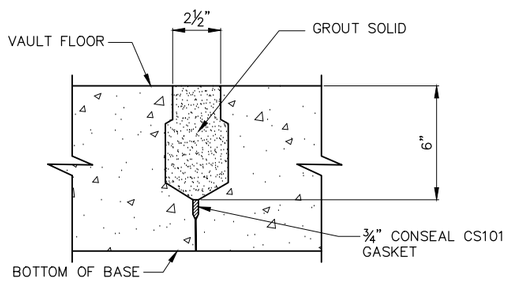

BASE GROUT DETAIL, TYP (4/–)

SCALE: 3"=1'-0"

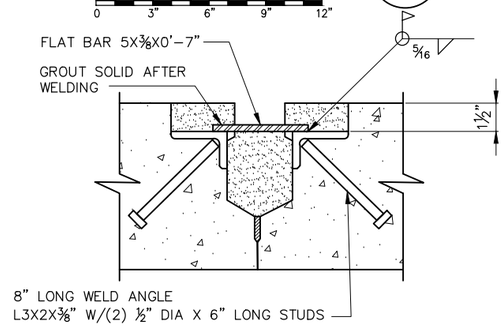

BASE WELD CONNECTION DETAIL, TYP (5/–)

SCALE: 3"=1'-0"

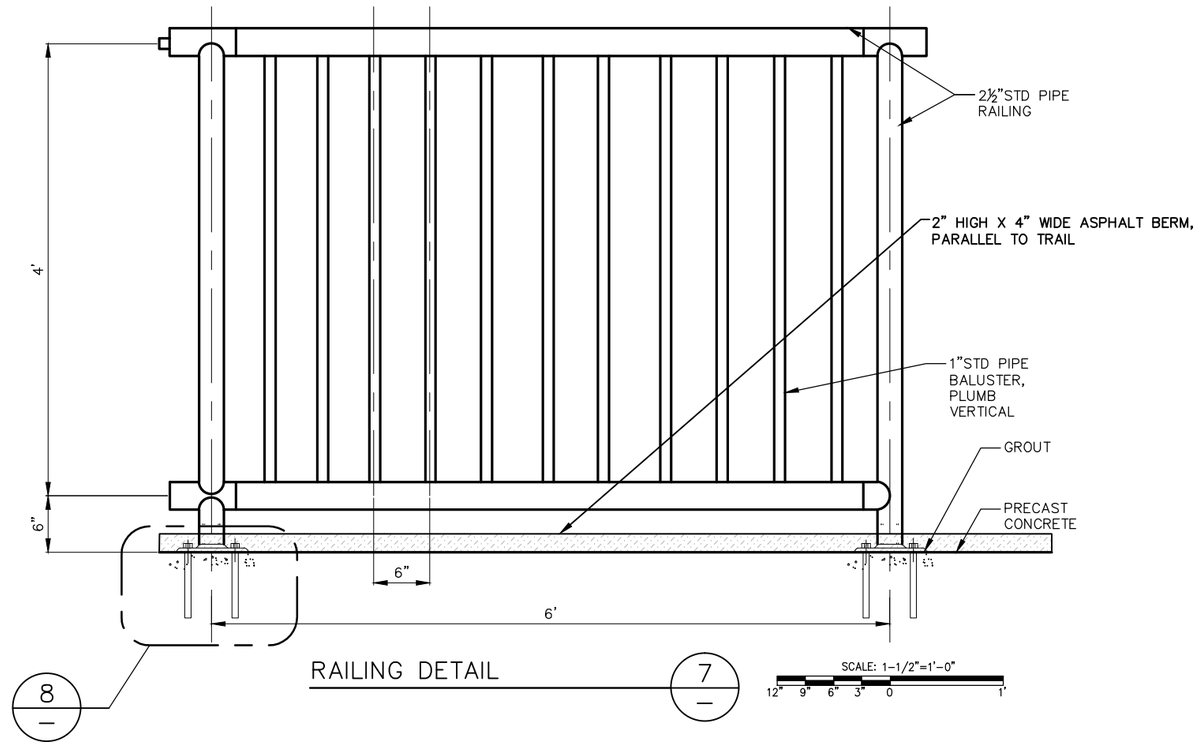

RAILING DETAIL (7/–)

SCALE: 1-1/2"=1'-0"

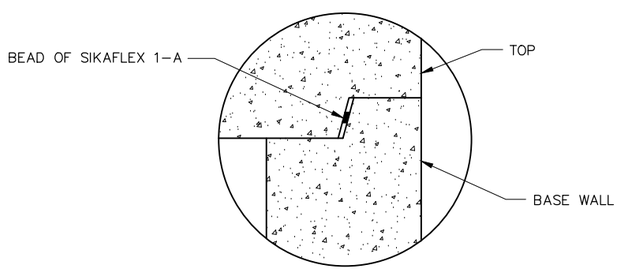

KEYWAY DETAIL (6/–)

SCALE: 3"=1'-0"

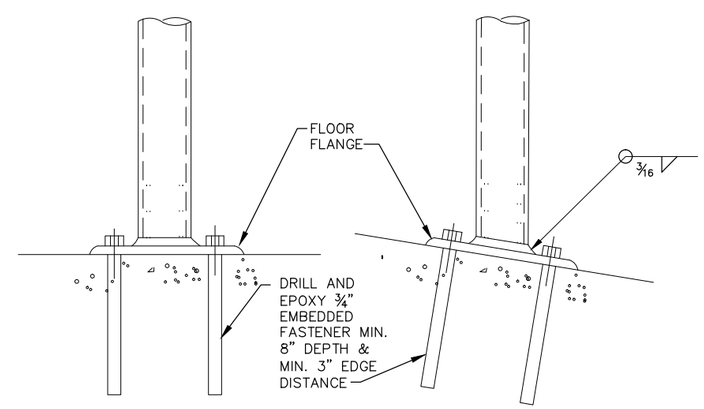

SECTION – CULVERT

SECTION – WING WALL

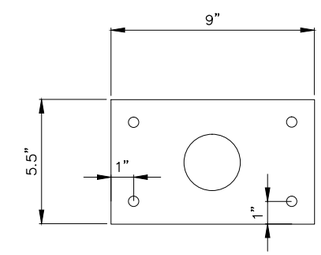

PLAN – FLANGE

RAILING FLOOR FLANGE DETAILS (8/–)

NTS

NOTES:

1. CONTRACTOR TO FOLLOW MANUFACTURER RECOMMENDATIONS AND WSDOT SPECIFICATION 7-02.3(6)C3 ERECTION WHEN JOINING CULVERT SECTIONS.
2. GROUT SHALL MEET WSDOT SPECIFICATION 9-20.3(2) FOR NONSHRINK APPLICATIONS.
3. MINIMUM (2) BASE WELDS PER JOINT.
4. CONTRACTOR TO PULL BASES TOGETHER TO COMPRESS GASKET.

0 1"
BAR MEASURES ONE INCH
ON ORIGINAL DRAWINGS

PAUL EDWARD DAVIES
STATE OF WASHINGTON
37861
REGISTERED
PROFESSIONAL ENGINEER

CITY OF BOTHELL NWS-2015-465

DESIGNED BY: PDV, GSA, KLF, KKM
DRAWN BY: PWH
CHECKED BY: BAJ
PROJECT MGR: PDV
FILENAME:

Resource Consultants, Inc.
REDMOND, WA.

SAMMAMISH RIVER
OFF-CHANNEL HABITAT RESTORATION

CULVERT CONNECTION/
RAILING DETAILS
100% DESIGN

DATE: MAR 4, 2016
SHEET: 9
REV: –

FILED IN: Z:\2050_Bothell\Drawings\100percent_SammiSideChannel_FULL SIZE_B4Draft_030415.dwg SAVED: Paul 3/4/2016 11:55 AM PLOTTED: Paul 3/4/2016 11:58 AM

NEW CHANNEL FINISHED GRADE CONTROL DETAILS; SEE NOTE 5				
STA (FT)	E (FT)	N (FT)	EL (FT)	NOTE
0+00	1301906.6	278632.1	16.9	EXIST SIDE SLOUGH BOTTOM
2+64	1302014.4	278837.6	16.9	EDGE CULVERT
2+94	1302041.5	278850.5	16.9	EDGE CULVERT
3+04	1302050.6	278854.9	16.9	EDGE LOG
3+05	1302051.6	278855.4	16.4	EDGE LOG
3+05	1302051.6	278855.4	15.5	BEGIN CHANNEL
4+50	1302099.3	278990.3	15.5	
4+50	1302099.3	278990.3	14.5	POOL EDGE
5+00	1302115.0	279037.6	14.5	POOL EDGE
5+00	1302115.0	279037.6	15.5	
5+50	1302157.7	279063.5	15.5	
5+50	1302157.7	279063.5	14.5	POOL EDGE
6+00	1302199.4	279090.2	14.5	POOL EDGE
6+00	1302199.4	279090.2	15.5	
6+50	1302247.2	279103.8	15.5	
6+50	1302247.2	279103.8	14.5	POOL EDGE
7+00	1302291.0	279128.1	14.5	POOL EDGE
7+00	1302291.0	279128.1	15.5	
7+95	1302382.6	279153.0	15.5	
7+95	1302382.6	279153.0	14.5	POOL EDGE
8+45	1302430.7	279151.1	14.5	POOL EDGE
8+45	1302430.7	279151.1	15.5	
9+10	1302492.3	279152.0	15.5	
9+10	1302492.3	279152.0	14.5	POOL EDGE
9+60	1302534.8	279176.7	14.5	POOL EDGE
9+60	1302534.8	279176.7	15.5	
11+36	1302446.7	279299.0	15.5	
11+36	1302446.7	279299.0	17.8	EDGE LOG
11+37	1302446.2	279300.0	18.3	EDGE LOG
11+46	1302442.4	279309.3	18.3	EDGE CULVERT
11+76	1302430.8	279337.0	18.3	EDGE CULVERT
11+80	1302429.5	279340.8	18.3	EXIST RIVER BOTTOM

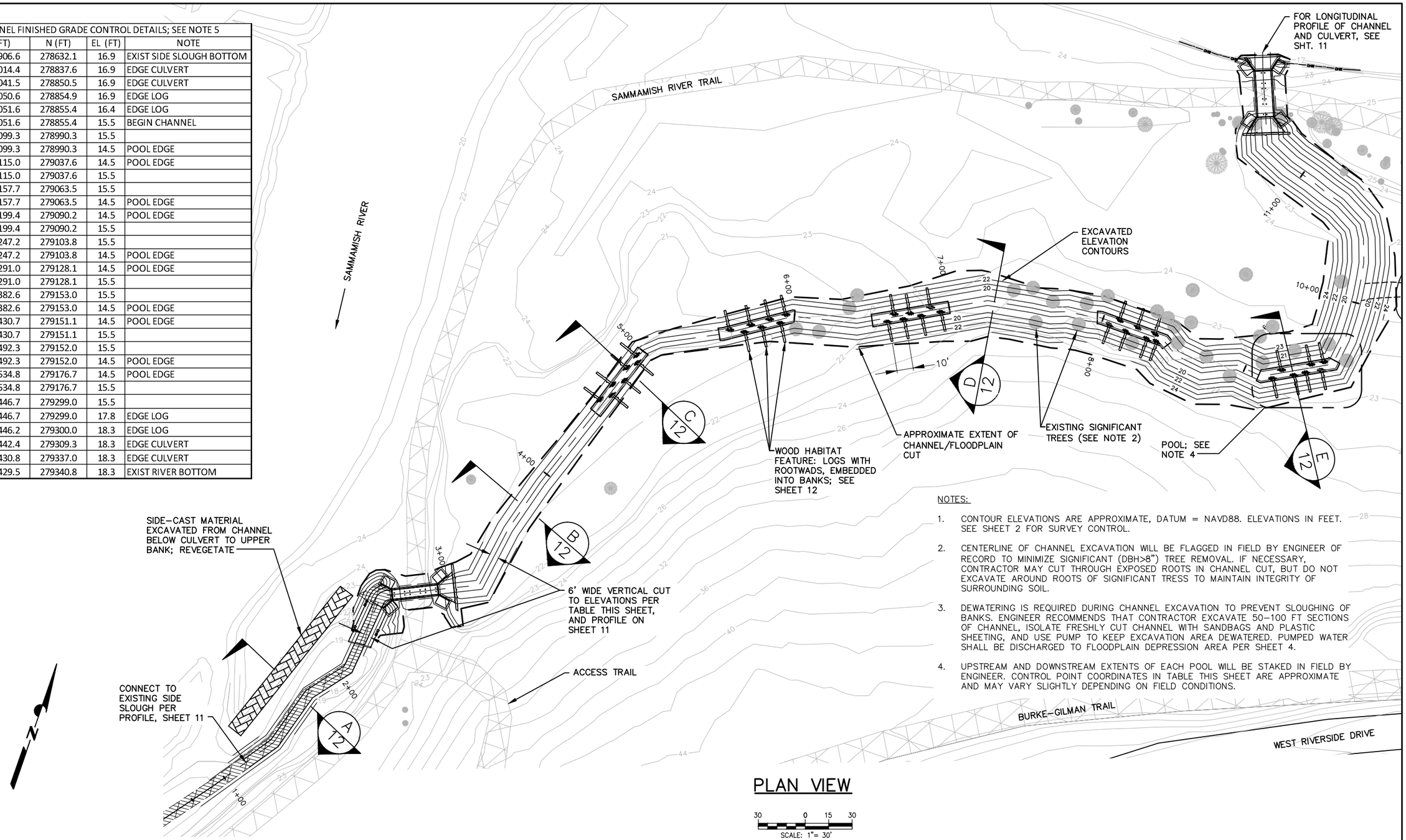

NOTES:

1. CONTOUR ELEVATIONS ARE APPROXIMATE, DATUM = NAVD88. ELEVATIONS IN FEET. SEE SHEET 2 FOR SURVEY CONTROL.
2. CENTERLINE OF CHANNEL EXCAVATION WILL BE FLAGGED IN FIELD BY ENGINEER OF RECORD TO MINIMIZE SIGNIFICANT (DBH>8") TREE REMOVAL. IF NECESSARY, CONTRACTOR MAY CUT THROUGH EXPOSED ROOTS IN CHANNEL CUT, BUT DO NOT EXCAVATE AROUND ROOTS OF SIGNIFICANT TRESS TO MAINTAIN INTEGRITY OF SURROUNDING SOIL.
3. DEWATERING IS REQUIRED DURING CHANNEL EXCAVATION TO PREVENT SLOUGHING OF BANKS. ENGINEER RECOMMENDS THAT CONTRACTOR EXCAVATE 50–100 FT SECTIONS OF CHANNEL, ISOLATE FRESHLY CUT CHANNEL WITH SANDBAGS AND PLASTIC SHEETING, AND USE PUMP TO KEEP EXCAVATION AREA DEWATERED. PUMPED WATER SHALL BE DISCHARGED TO FLOODPLAIN DEPRESSION AREA PER SHEET 4.
4. UPSTREAM AND DOWNSTREAM EXTENTS OF EACH POOL WILL BE STAKED IN FIELD BY ENGINEER. CONTROL POINT COORDINATES IN TABLE THIS SHEET ARE APPROXIMATE AND MAY VARY SLIGHTLY DEPENDING ON FIELD CONDITIONS.

PLAN VIEW

30 0 15 30
SCALE: 1"= 30'

0 1"
BAR MEASURES ONE INCH ON ORIGINAL DRAWINGS

PAUL EDWARD DEVRIES
STATE OF WASHINGTON
37861
REGISTERED PROFESSIONAL ENGINEER

CITY OF BOTHELL NWS-2015-465

DESIGNED BY: PDV, GSA, KLF, KKM
DRAWN BY: PWH
CHECKED BY: BAJ
PROJECT MGR: PDV
FILENAME:

Resource Consultants, Inc.
REDMOND, WA.

SAMMAMISH RIVER
OFF-CHANNEL HABITAT RESTORATION

CHANNEL EXCAVATION PLAN

100% DESIGN

DATE: MAR 4, 2016
SHEET: 10
REV: –

FILED IN: Z:\2050_Bothell\Drawings\100percent_SammSideChannel_FULL SIZE_Biddraft_030416.dwg SAVED: Paul 3/4/2016 11:55 AM PLOTTED: Paul 3/4/2016 11:58 AM

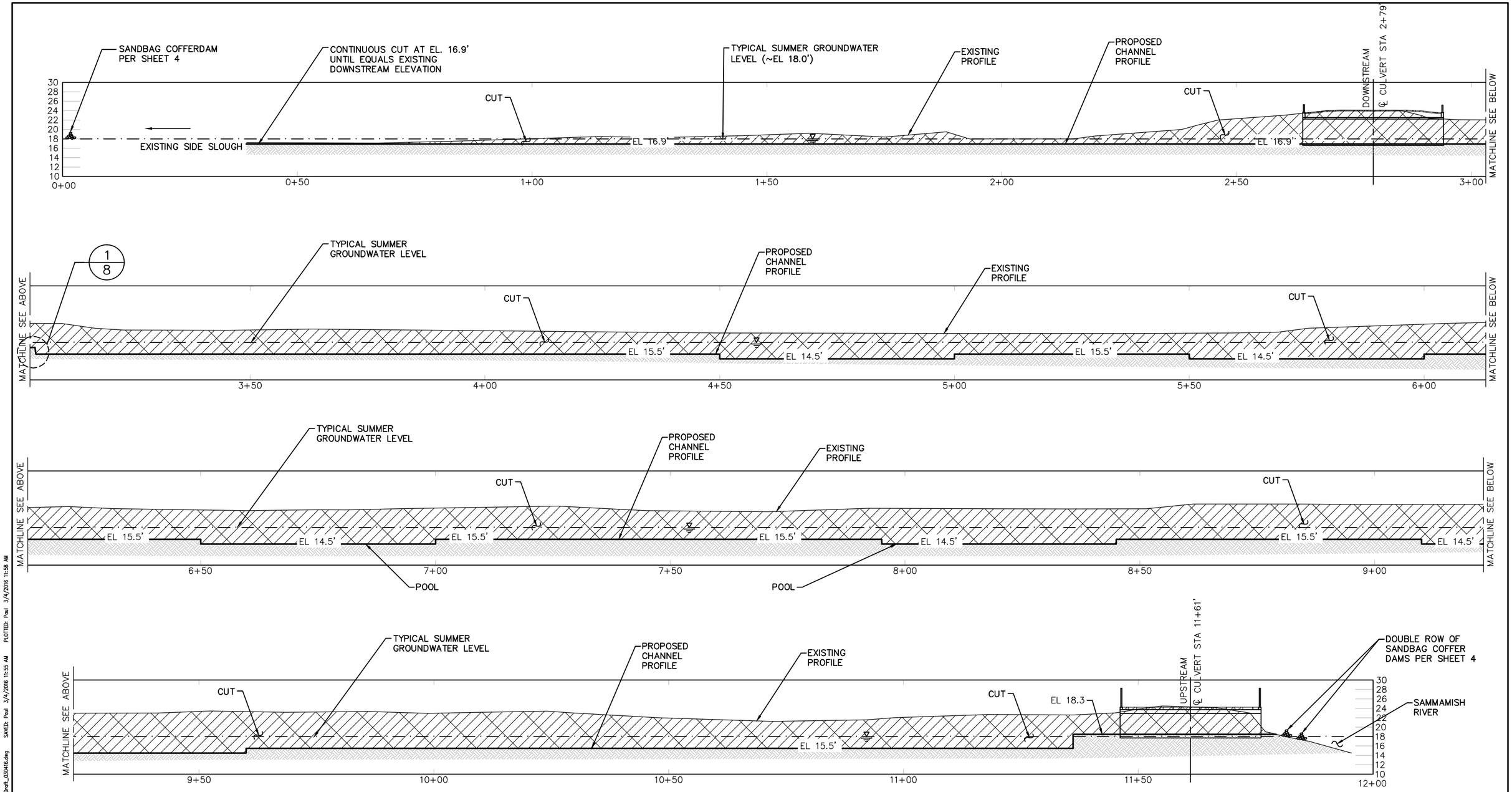

PROPOSED CHANNEL PROFILE

10 0 5 10
SCALE: 1"= 10'

0 1"
BAR MEASURES ONE INCH ON ORIGINAL DRAWINGS

PAUL EDWARD DEVRIES
STATE OF WASHINGTON
37861
REGISTERED PROFESSIONAL ENGINEER

CITY OF BOTHELL NWS-2015-465

DESIGNED BY: PDV, GSA, KLF, KKM
DRAWN BY: PWH
CHECKED BY: BAJ
PROJECT MGR: PDV
FILENAME:

Resource Consultants, Inc.
REDMOND, WA.

SAMMAMISH RIVER
OFF-CHANNEL HABITAT RESTORATION

PROPOSED CHANNEL PROFILE

100% DESIGN

DATE: MAR 4, 2016
SHEET: 11
REV: –

FILED IN: Z:\2050_Bothell\Drawings\100percent_SammSideChannel_FULL SIZE_Bidkraft_030416.dwg SAVED: Paul 3/4/2016 11:55 AM PLOTTED: Paul 3/4/2016 11:58 AM

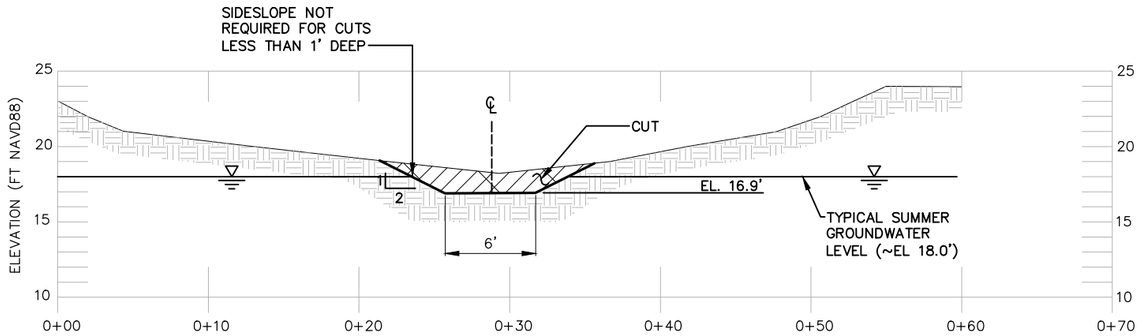

SECTION A/10
PROPOSED CHANNEL CUT, TYP
SCALE: 1"= 5'

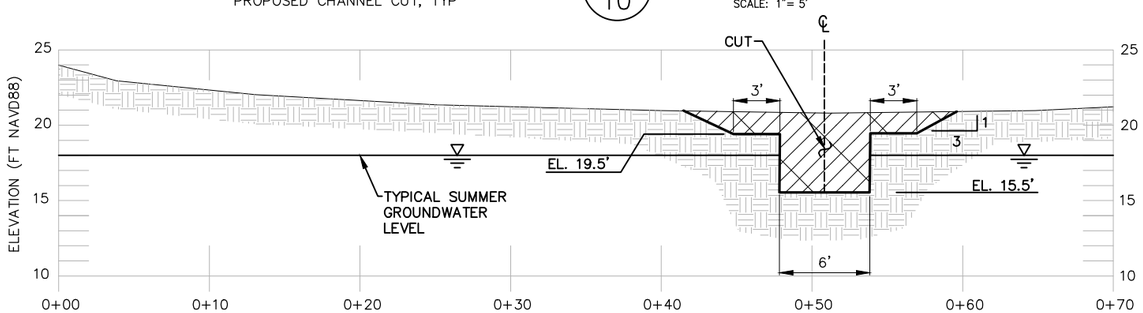

SECTION B/10
PROPOSED CHANNEL CUT, TYP
SCALE: 1"= 5'

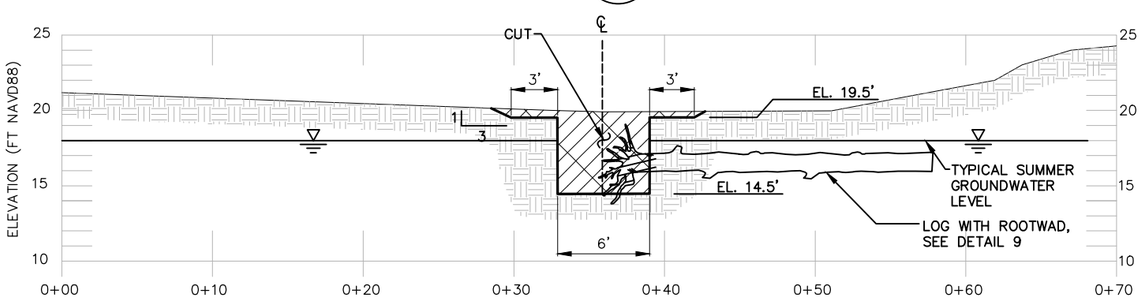

SECTION C/10
PROPOSED CHANNEL CUT, TYP
SCALE: 1"= 5'

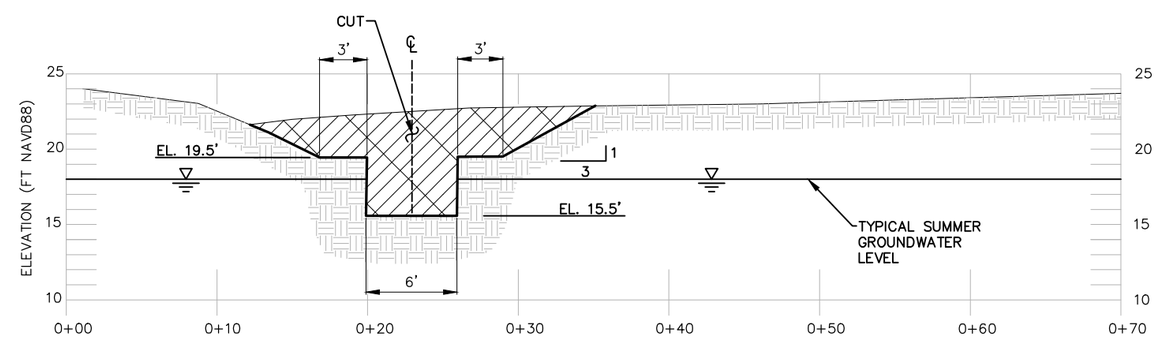

SECTION D/10
PROPOSED CHANNEL CUT, TYP
SCALE: 1"= 5'

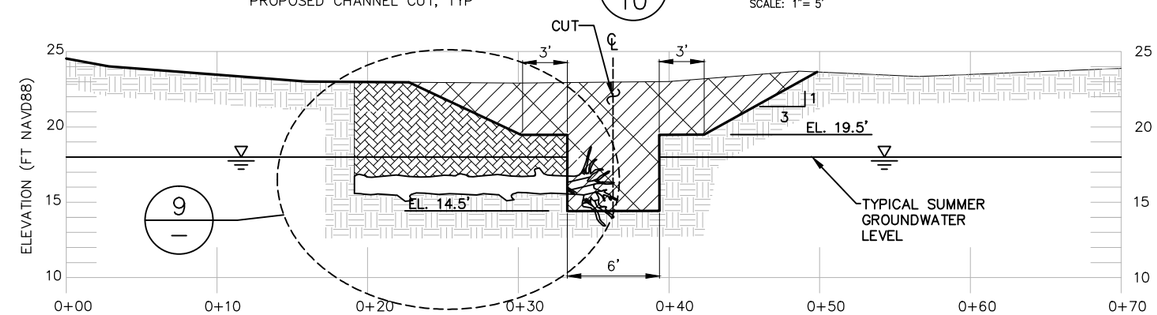

SECTION E/10
PROPOSED CHANNEL CUT, TYP
SCALE: 1"= 5'

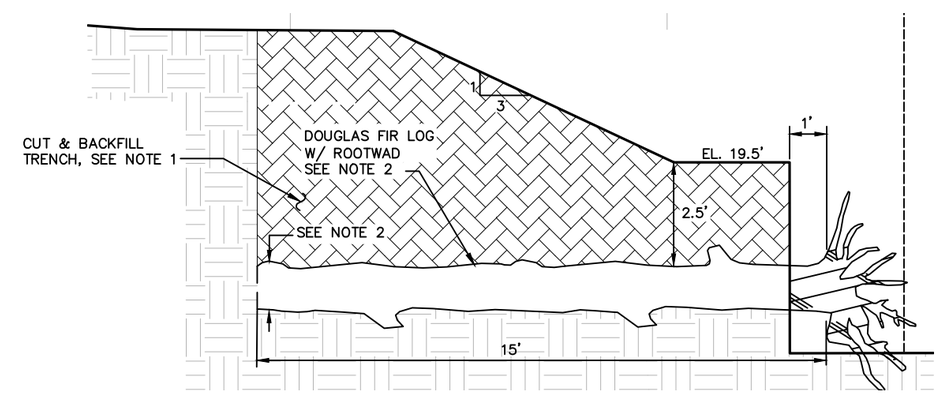

DETAIL 9/—
LOG INSTALLATION, TYP
SCALE: 1"= 2'

NOTES:

1. DEWATER CHANNEL IN VICINITY OF LOG INSTALLATION PRIOR TO CUTTING TRENCH. USE NATIVE SOIL FOR BACKFILL, COMPACT BACKFILL.
2. LOGS SHALL VARY UNIFORMLY IN DBH BETWEEN 7" AND 14". EACH POOL SHALL HAVE A MIX OF LOG SIZES, WITH SIZE VARYING RANDOMLY IN UPSTREAM–DOWNSTREAM DIRECTION. ENGINEER SHALL IDENTIFY EACH PIECE BY LOCATION.

0 1"
BAR MEASURES ONE INCH ON ORIGINAL DRAWINGS

PAUL EDWARD DEVRIES
STATE OF WASHINGTON
37861
REGISTERED PROFESSIONAL ENGINEER

CITY OF BOTHELL NWS-2015-465

DESIGNED BY: PDV, GSA, KLF, KKM
DRAWN BY: PWH
CHECKED BY: BAJ
PROJECT MGR: PDV
FILENAME:

Resource Consultants, Inc.
REDMOND, WA.

SAMMAMISH RIVER
OFF–CHANNEL HABITAT RESTORATION

PROPOSED CHANNEL SECTIONS, LOG INSTALLATION DETAIL
100% DESIGN

DATE: MAR 4, 2016
SHEET: 12
REV: –

FILED IN: Z:\2050_Bothell\Drawings\100percent_SammSideChannel_FULL SIZE_BldDraft_030416.dwg SAVED: Paul 3/4/2016 11:55 AM PLOTTED: Paul 3/4/2016 11:58 AM

NOTES:

1. CONTOUR ELEVATIONS IN FEET. DATUM = NAVD88.
2. IN AREAS WHERE FILL IS TO BE PLACED, COMPLETELY GRUB OUT ROOTSTOCKS OF ALL HIMALAYAN BLACKBERRY (RUBUS ARMENIACUS) AND HAUL OFFSITE TO APPROVED DISPOSAL LOCATION. MOW REED CANARYGRASS CLOSE TO GROUND PRIOR TO PLACING FILL. REVEGETATE PER SHEETS 14,15
3. CONTRACTOR SHALL START AT FAR END OF FILL AREA AND PROCEED FILLING BACK TOWARDS CHANNEL. AN ACCESS ROUTE SHALL BE PRESERVED AROUND NORTH PERIMETER OF FILL AREA TO ALLOW EQUIPMENT TO EXIT SITE WHEN EXCAVATION AND GRADING ARE COMPLETED.
4. SPOILS SHALL BE DUMPED IN PILES AND SPREAD LIGHTLY TO FIRM BUT NON-COMPACTED STATE WHILE ACHIEVING TARGET GRADE. NO HEAVY EQUIPMENT SHALL BE ALLOWED TO TRAVERSE ACROSS SPOILS, WHICH SHALL BE PLANTED MANUALLY PER NOTES, SHEET 15 AND FOLLOWING CONTRACT PROVISIONS.

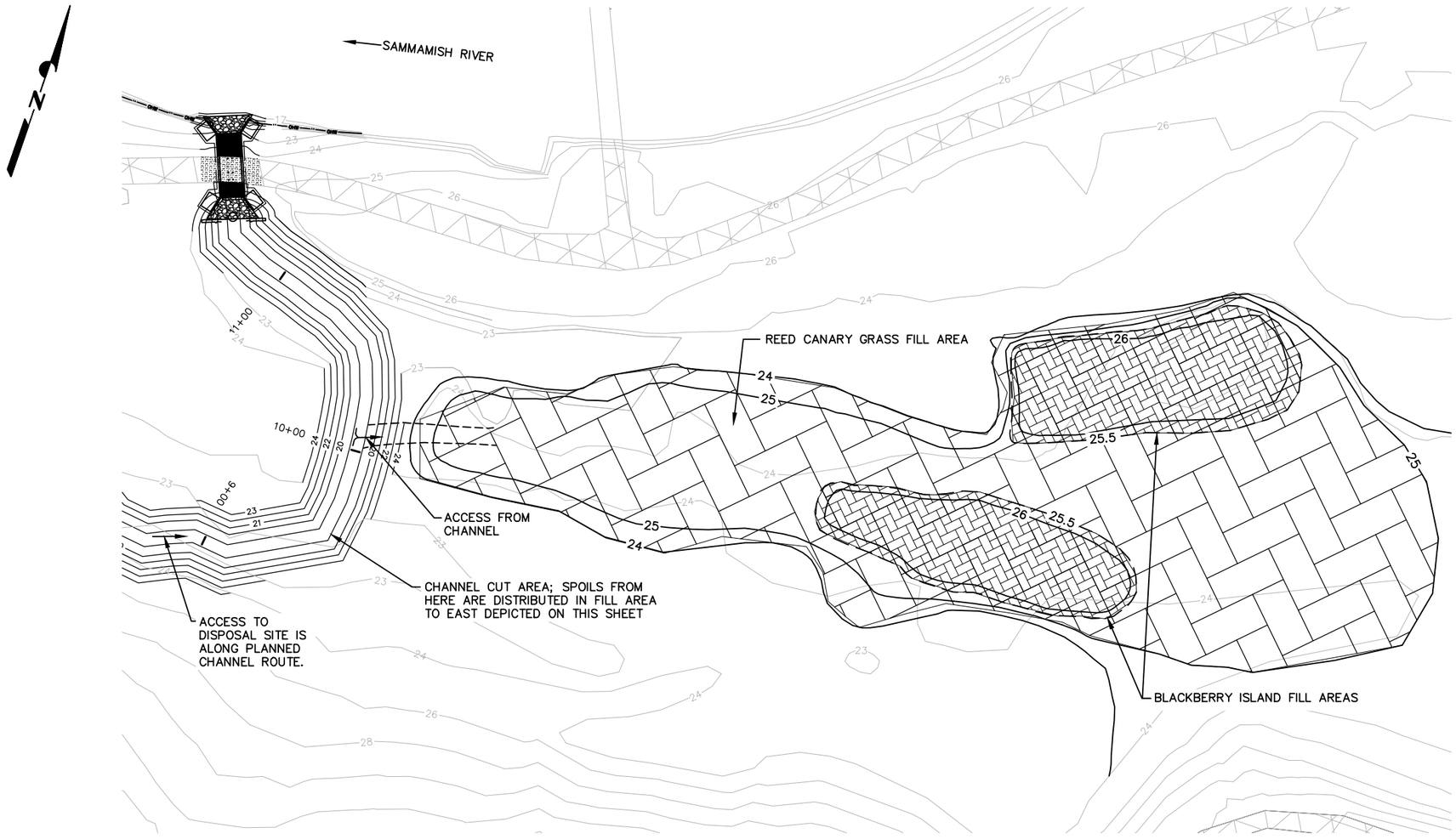

GRADING PLAN

REED CANARY GRASS FILL AREA

30 0 15 30

SCALE: 1"= 30'

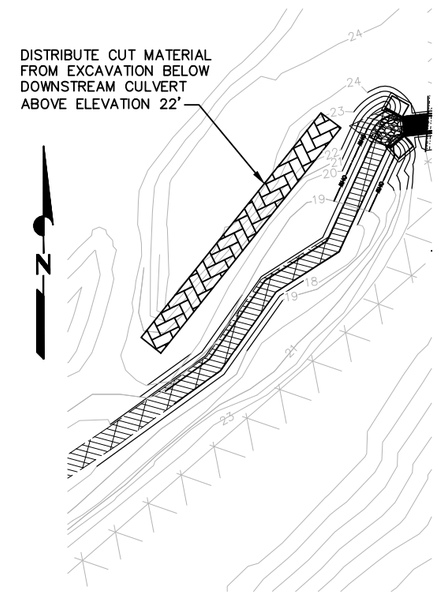

GRADING PLAN

CHANNEL CONNECTION AREA BELOW DOWNSTREAM CULVERT

30 0 15 30

SCALE: 1"= 30'

FILED IN: Z:\2050_Bothell\Drawings\100percent_SammSideChannel_FULL SIZE_BidDraft_030416.dwg SAVED: Paul 3/4/2016 11:55 AM PLOTTED: Paul 3/4/2016 11:58 AM

0 1"

BAR MEASURES ONE INCH ON ORIGINAL DRAWINGS

PAUL EDWARD DEVRIES
STATE OF WASHINGTON
37861
REGISTERED PROFESSIONAL ENGINEER

CITY OF BOTHELL NWS-2015-465

DESIGNED BY: PDV, GSA, KLF, KKM
DRAWN BY: PWH
CHECKED BY: BAJ
PROJECT MGR: PDV
FILENAME:

Resource Consultants, Inc.
REDMOND, WA.

SAMMAMISH RIVER
OFF-CHANNEL HABITAT RESTORATION

FLOODPLAIN FILL/GRADING PLAN

100% DESIGN

DATE: MAR 4, 2016

SHEET: 13

REV: –

NOTES:

1. SEE SHEET 15 FOR PLANTING QUANTITIES. BOUNDARIES OF PLANTING AREA WILL BE STAKED IN FIELD BY PROJECT ECOLOGIST. SEE PLANTING AREA TYPE NUMBER AND HATCH KEY ON SHEET 15.
2. PRIOR TO PLANTING REED CANARY GRASS FLOODPLAIN NON-FILL AREAS AND BLACKBERRY HILLSLOPE AREAS, CONTRACTOR SHALL (I) MOW EXTENT OF REED CANARY GRASS FLOODPLAIN RESTORATION AREA 1 AND REED CANARY GRASS FOREST INCLUSION AREA 5 TO A MAXIMUM HEIGHT OF 4"-6" PRIOR TO INSTALLATION OF LIVE STAKES PER AMENDED SPECIFICATION 8-02.3(8) IN CONTRACT PROVISIONS, AND (II) COMPLETELY GRUB OUT ROOTSTOCKS OF ALL HIMALAYAN BLACKBERRY (RUBUS ARMENIACUS) WITHIN BLACKBERRY HILLSLOPE RESTORATION AREA, WITH ROOTSTOCKS GRUBBED TO THE EXTENT POSSIBLE WITHOUT DAMAGING NATIVE VEGETATION. NO TREES GREATER THAN 2"DIAMETER BREAST HEIGHT ARE TO BE REMOVED FOR WEED CONTROL EFFORTS.
3. ALL NATIVE TREES IN THE EXISTING FLOODPLAIN FOREST UNDERSTORY ENHANCEMENT AREAS 6 ARE TO REMAIN AND BE PROTECTED FROM DAMAGE DURING CONSTRUCTION. CONTRACTOR SHALL ENSURE NO DISTURBANCE TO NATIVE VEGETATION OUTSIDE PROJECT AREA BOUNDARIES.
4. PLANTING METHODS SHALL FOLLOW AMENDMENTS TO WSDOT STANDARD SPECIFICATIONS IN CONTRACT PROVISIONS, AND STANDARD SPECIFICATIONS LISTED BELOW.
5. WSDOT SPECIFICATION 8-02.3(12) COMPLETION OF INITIAL PLANTING SHALL APPLY.
6. WSDOT SPECIFICATION 8-02.3(2)C PLANT ESTABLISHMENT PLAN AND 8-02.3(13) PLANT ESTABLISHMENT SHALL APPLY.
7. WSDOT SPECIFICATION 8-02.3(14) PLANT REPLACEMENT SHALL APPLY.
8. WSDOT SPECIFICATION 8-01.3(2)F DATES FOR APPLICATION OF FINAL SEED, FERTILIZER, AND MULCH, AND 8-01.3(2)G PROTECTION AND CARE OF SEEDED AREAS, SHALL APPLY, WITH THE CONDITION THAT NO FERTILIZERS OR MULCH SHALL BE USED ON THIS SITE
9. NO TREES SHALL BE PLANTED WITHIN 12' OF TRAIL. NO COTTONWOODS SHALL BE PLANTED WITHIN 20' OF TRAIL.

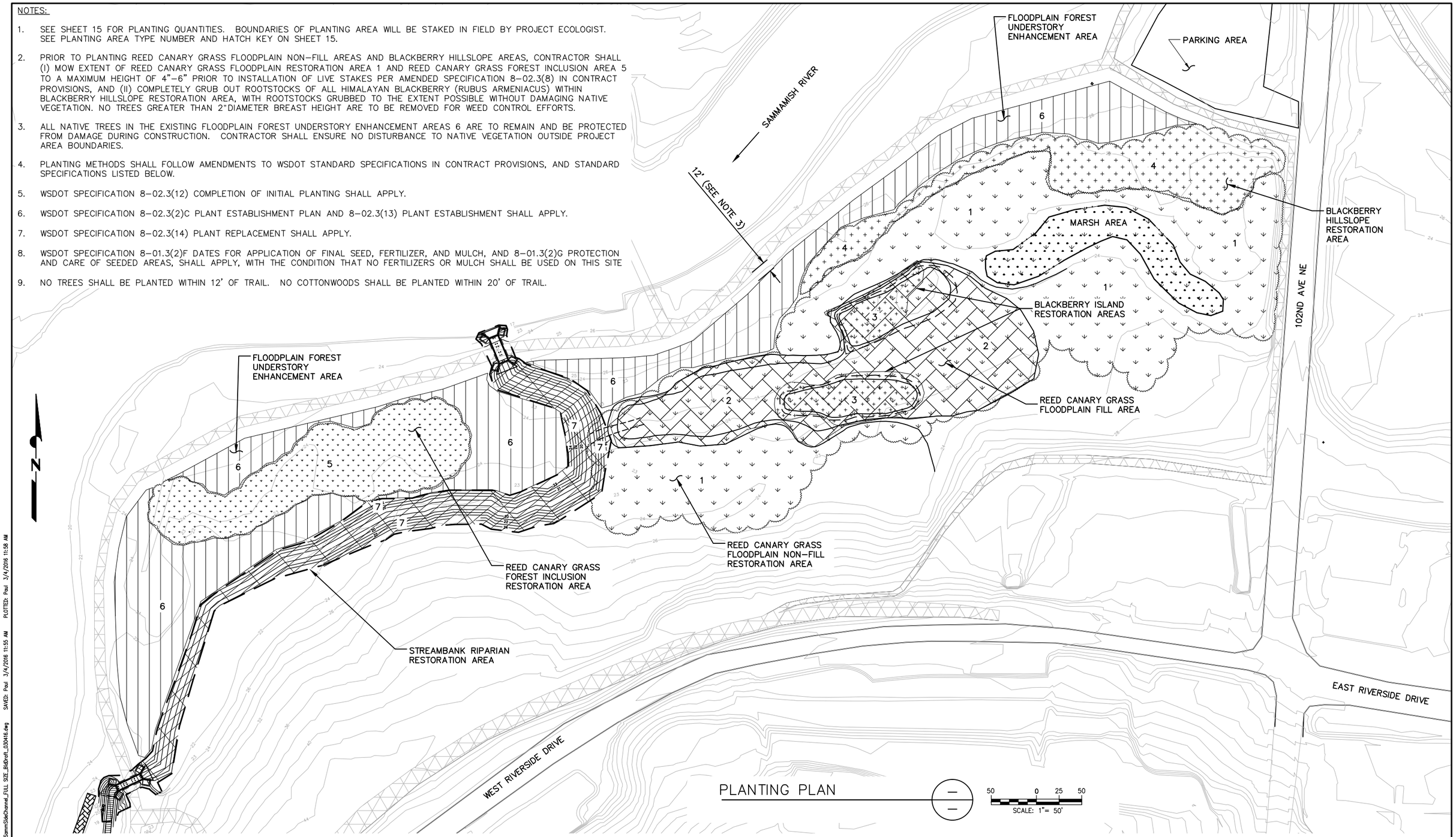

PLANTING PLAN

50 0 25 50
SCALE: 1"= 50'

0 1"
BAR MEASURES ONE INCH ON ORIGINAL DRAWINGS

PAUL EDWARD DAVIES
STATE OF WASHINGTON
37861
REGISTERED PROFESSIONAL ENGINEER

CITY OF BOTHELL NWS-2015-465

DESIGNED BY: PDV, GSA, KLF, KKM
DRAWN BY: PWH
CHECKED BY: BAJ
PROJECT MGR: PDV
FILENAME:

Resource Consultants, Inc.
REDMOND, WA.

SAMMAMISH RIVER
OFF-CHANNEL HABITAT RESTORATION

PLANTING PLAN, DETAILS

100% DESIGN

DATE: MAR 4, 2016
SHEET: 14
REV: –

FILED IN: Z:\2050_Bothell\Drawings\100percent_SammSideChannel_FULL SIZE_B4Draft_030415.dwg SAVED: Paul 3/4/2016 11:55 AM PLOTTED: Paul 3/4/2016 11:58 AM

Reed Canarygrass Floodplain, Non-Fill Area						
Scientific Name	**Common Name**	**Plant Material**	**On-center Spacing**	**Area (ft2)**	**Number of Plants per acre**	**Number of plants per site**
Shrubs						
Salix lasiandra	Pacific willow	live stakes, 6' x 1.5"	2'	90,674	2450	5100
Salix scouleriana	Scouler willow	live stakes, 6' x 1.5"	2'	90,674	2450	5100
Salix sitchensis	Sitka willow	live stakes, 6' x 1.5"	2'	90,674	2450	5100
Cornus sericea	Red osier dogwood	live stakes, 6' x 1"	2'	90,674	2450	5100

HATCH KEY – SHEET 14

REED CANARYGRASS, NON–FILL

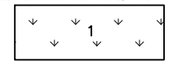

Reed Canarygrass Meadow Fill Area Above 100-Year Floodplain Elevation						
Scientific Name	**Common Name**	**Plant Material**	**On-center Spacing**	**Area (ft2)**	**Number of Plants per acre**	**Number of plants per site**
Shrubs						
Salix lasiandra	Pacific willow	live stakes, 6' x 1.5"	3'	22,663	1089	567
Salix sitchensis	Sitka willow	live stakes, 6' x 1.5"	3'	22,663	1089	567
Spiraea douglasii	Western spirea	1-gallon pots	3'	22,663	218	113
Rubus spectabilis	Salmonberry	1-gallon pots	3'	22,663	131	68
Rosa nutkana	Nootka rose	1-gallon pots	3'	22,663	87	45
Rosa pisocarpa	Cluster rose	1-gallon pots	3'	22,663	87	45
Lonicera involucrata	Black twinberry	1-gallon pots	3'	22,663	436	227
Frangula purshiana	Cascara	1-gallon pots	3'	22,663	131	68
Cornus sericea	Redosier dogwood	live stakes, 6' x 1"	3'	22,663	871	453
Physocarpus capitatus	Pacific ninebark	1-gallon pots	3'	22,663	218	113

REED CANARY GRASS, FIILL

Blackberry Island and Blackberry Hillslope						
Scientific name	**Common name**	**Plant material**	**On-center Spacing**	**Area (ft2)**	**Number of Plants per acre**	**Number of plants per site**
Trees						
Fraxinus latifolia	Oregon ash	1-gallon pots	12'	38542	27	24
Picea sitchensis	Sitka spruce	1-gallon pots	12'	38542	68	60
Thuja plicata	Western red cedar	1-gallon pots	12'	38542	68	60
Populus balsamifera ssp. *trichocarpa*	Black cottonwood	1-gallon pots	12'	38542	55	48
Alnus rubra	Red alder	1-gallon pots	12'	38542	55	48
Shrubs						
Corylus cornuta	Beaked hazelnut	1-gallon pots	3'	38542	218	193
Rubus spectabilis	Salmonberry	1-gallon pots	3'	38542	218	193
Rosa nutkana	Nootka rose	1-gallon pots	3'	38542	218	193
Rosa pisocarpa	Cluster rose	1-gallon pots	3'	38542	218	193
Lonicera involucrata	Black twinberry	1-gallon pots	3'	38542	871	771
Salix sitchensis	Sitka willow	Live stakes, 6' x 1.5"	3'	38542	871	771
Sambucus racemosa	Red elderberry	1-gallon pots	3'	38542	871	771
Cornus sericea	Redosier dogwood	1-gallon pots	3'	38542	871	771

BLACKBERRY ISLAND

BLACKBERRY HILLSLOPE

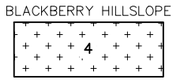

Reed Canarygrass Forest Inclusion Area						
Scientific Name	**Common Name**	**Plant Material**	**On-center Spacing**	**Area (ft2)**	**Number of Plants per acre**	**Number of plants per site**
Trees						
Picea sitchensis	Sitka spruce	1-gallon pots	12'	25873	136	81
Thuja plicata	Western red cedar	1-gallon pots	12'	25873	136	81
Shrubs						
Oemlaria cerasiformis	Indian plum	1-gallon pots	3'	25873	1307	776
Corylus cornuta	Beaked hazelnut	1-gallon pots	3'	25873	871	517
Rubus spectabilis	Salmonberry	1-gallon pots	3'	25873	871	517
Rosa pisocarpa	Cluster rose	1-gallon pots	3'	25873	436	259
Rosa nutkana	Nootka rose	1-gallon pots	3'	25873	436	259

HATCH KEY – SHEET 14

REED CANARYGRASS, FOREST

Existing Floodplain Forest Understory Enhancement.						
Scientific Name	**Common Name**	**Plant Material**	**On-center Spacing**	**Area (ft2)**	**Number of Plants per acre**	**Number of plants per site**
Trees						
Picea sitchensis	Sitka spruce	1-gallon pots	12'	68570	68	107
Thuja plicata	Western red cedar	1-gallon pots	12'	68570	68	107
Psuedotsuga menziesii	Douglas-fir	1-gallon pots	12'	68570	68	107
Tsuga heterophylla	Western hemlock	1-gallon pots	12'	68570	68	107

FLOODPLAIN FOREST

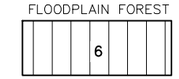

Excavated Channel Streambank Riparian Area						
Scientific Name	**Common Name**	**Plant Material**	**On-center Spacing**	**Area (ft2)**	**Number of Plants per acre**	**Number of plants per site**
Shrubs						
Salix lasiandra	Pacific willow	live stakes, 4' x 1.5"	2'	22927	2940	1548
Salix sitchensis	Sitka willow	live stakes, 4' x 1.5"	2'	22927	2940	1548
Cornus sericea	Redosier dogwood	live stakes, 4' x 1"	2'	22927	3920	2063
Herbs						
Wetland Grass/Sedge Seed Mix -- See Table Below						

Wetland Grass/Sedge Seed Mix: Application Rate = 130 lbs/acre; WSDOT Spec 8-01.3(2)A1 Applies				
Scientific Name	**Common Name**	**% by Weight**	**% By Purity**	**Min % Germination**
Elymus Glaucus	Blue Wildrye	40%	95%	85%
Festuca rubra rubra	Native Red Fescue	35%	95%	85%
Deschampia cespitosa	Tufted Hairgrass	10%	95%	85%
Glyceria occidentalis	Western Manngrass	10%	90%	85%
Beckmannia syzigachne	American Sloughgrass	5%	90%	80%
Other Crop Seed and Inert Matter		2.5% Max		
Weed Seed (No Noxious)		0.4% Max		

RIPARIAN RESTORATION

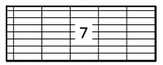

0 1"

BAR MEASURES ONE INCH ON ORIGINAL DRAWINGS

PAUL EDWARD DEVRIES
STATE OF WASHINGTON
37861
REGISTERED PROFESSIONAL ENGINEER

CITY OF BOTHELL NWS-2015-465

DESIGNED BY: PDV, GSA, KLF, KKM
DRAWN BY: PWH
CHECKED BY: BAJ
PROJECT MGR: PDV
FILENAME:

Resource Consultants, Inc.
REDMOND, WA.

SAMMAMISH RIVER
OFF–CHANNEL HABITAT RESTORATION

PLANTING SPECIFICATIONS

100% DESIGN

DATE: MAR 4, 2016
SHEET: 15
REV: –

FILED IN: Z:\2050_Bothell\Drawings\100percent_SammSideChannel_FULL SIZE_BidDraft_030416.dwg SAVED: Paul 3/4/2016 11:55 AM PLOTTED: Paul 3/4/2016 11:59 AM