Copyright © BergerABAM. All Rights Reserved.

PORT OF GRAYS HARBOR

28th Street Boat Launch Improvements Construction Phase II

CONTRACT No. 1836

PORT COMMISSIONERS:

JACK THOMPSON

CHUCK CALDWELL

STAN PINNICK

PORT STAFF:

GARY NELSON
Executive Director

LEONARD BARNES
Deputy Executive Director

MICHAEL JOHNSON
Contracts Administrator

RANDY LEWIS
Director of Environmental and Engineering Services

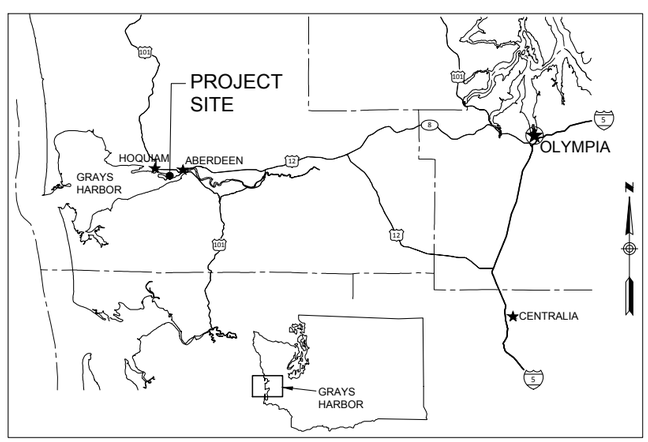

VICINITY MAP

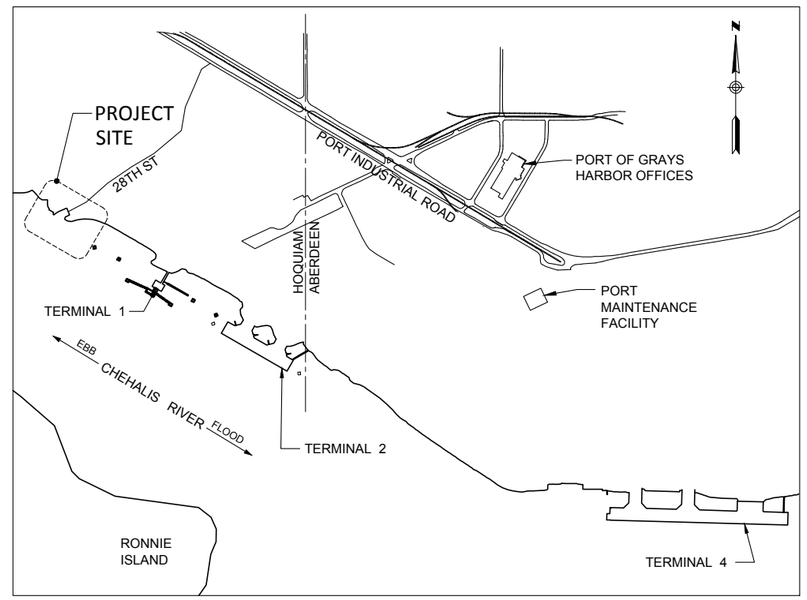

LOCATION MAP

SHEET NO.	DRAWING NO.	DRAWING TITLE
		GENERAL
1	G-1	COVER SHEET, VICINITY MAP, DRAWING LIST
2	G-2	GENERAL NOTES
3	G-3	UPLAND CIVIL SPECIFICATIONS - SHEET 1
4	G-4	UPLAND CIVIL SPECIFICATIONS - SHEET 2
5	G-5	UPLAND CIVIL SPECIFICATIONS - SHEET 3
6	G-6	UPLAND CIVIL SPECIFICATIONS - SHEET 4
7	G-7	UPLAND CIVIL SPECIFICATIONS - SHEET 5
		CIVIL
8	C-1	EXISTING CONDITIONS
9	C-2	TESC & DEMO PLAN - SHEET 1
10	C-3	TESC & DEMO PLAN - SHEET 2
11	C-4	TESC & DEMO PLAN - SHEET 3
12	C-5	SITE LAYOUT - SHEET 1
13	C-6	SITE LAYOUT - SHEET 2
14	C-7	SITE LAYOUT - SHEET 3
15	C-8	GRADING & DRAINAGE PLAN - SHEET 1
16	C-9	GRADING & DRAINAGE PLAN - SHEET 2
17	C-10	GRADING & DRAINAGE PLAN - SHEET 3
18	C-11	ENLARGED GRADING & DRAINAGE PLAN
19	C-12	ENLARGED BUILDING GRADING & DRAINAGE PLAN
20	C-13	GRADING & DRAINAGE PROFILES & SECTIONS
21	C-14	GRADING & DRAINAGE DETAILS - SHEET 1
22	C-15	GRADING & DRAINAGE DETAILS - SHEET 2
23	C-16	GRADING & DRAINAGE DETAILS - SHEET 3
24	C-17	GRADING & DRAINAGE DETAILS - SHEET 4
25	C-18	GRADING & DRAINAGE DETAILS - SHEET 5
26	C-19	GRADING & DRAINAGE DETAILS - SHEET 6
27	C-20	PAVING & STRIPING PLAN - SHEET 1
28	C-21	PAVING & STRIPING PLAN - SHEET 2
29	C-22	PAVING & STRIPING PLAN - SHEET 3
30	C-23	PAVING & STRIPING DETAILS
31	C-24	UTILITY PLAN
32	C-25	MISCELLANEOUS DETAILS & SECTIONS - SHEET 1 - RESTROOM BUILDING
33	C-26	MISCELLANEOUS DETAILS & SECTIONS - SHEET 2 - UTILITY DETAILS
		STRUCTURAL
34	S-1	MARINE SITE PLAN
35	S-2	MARINE PILE PLAN
36	S-3	FLOAT/ABUTMENT PLAN AND SECTIONS
37	S-4	FLOAT PLAN AND SECTIONS
38	S-5	GROUNDING SYSTEM PLAN, DETAILS AND FLOAT SECTIONS
39	S-6	BOAT RAMP PLAN AND ELEVATIONS
40	S-7	BOAT RAMP SECTIONS AND DETAILS
41	S-8	BOAT RAMP DETAILS - SHEET 1
42	S-9	BOAT RAMP DETAILS - SHEET 2
43	S-10	ABUTMENT PLAN AND SECTIONS
44	S-11	GUIDE FRAME PLAN AND DETAILS
		ELECTRICAL
45	E-1.0	OVERALL ELECTRICAL SITE PLAN
46	E-1.1	PARTIAL ELECTRICAL SITE PLAN
47	E-1.2	PARTIAL ELECTRICAL SITE PLAN
48	E-2.0	ELECTRIACAL DETAILS, PANEL SCHEDULES AND POWER RISER DIAGRAM

BID DOCUMENTS

MARK	REVISION DESCRIPTION	BY	APP.	DATE

BergerABAM
33301 9th Avenue South, Suite 300
Federal Way, Washington 98003-2600
(206) 431-2300 Fax: (206) 431-2250

SCOTT BRANLUND
STATE OF WASHINGTON
STRUCTURAL ENGINEER
PROFESSIONAL ENGINEER
Not for Use
Oct 30, 2017

DRAWN BY MDB
DESIGN BY GDN
CHECK BY CSB
PROJ MGR CSB

PORT OF GRAYS HARBOR
28TH STREET BOAT LAUNCH IMPROVEMENTS
CONSTRUCTION PHASE II

COVER SHEET, VICINITY MAP, DRAWING LIST

DRAWING NO. G-1
PROJECT NO. FAWAT-12-145
DATE: 10/30/17
SHEET NO. 1 OF 48

Last Saved by: Garth.nelson on: Oct 31, 2017 6:07 AM File: Q:\FederalWay\2012\FAWAT-12-145\CAD\Dwgs\Phase_II\P21_G01.dwg

Copyright © BergerABAM. All Rights Reserved.

GENERAL NOTES

GENERAL

1. THESE NOTES CONTAIN GENERAL INFORMATION AND ARE NOT NECESSARILY COMPLETE FOR ALL CONSTRUCTION PURPOSES. VERIFY INFORMATION SHOWN ON THE DRAWINGS WITH OTHER CONTRACT DOCUMENTS AND BRING ANY CONFLICTS TO THE ATTENTION OF THE PORT BEFORE BEGINNING THE AFFECTED WORK. THE PORT WILL RESOLVE CONFLICTS.
2. THE BOAT LAUNCH MAY BE IN OPERATION DURING A PORTION OF THE WORK DESCRIBED IN THE CONTRACT DOCUMENTS. COORDINATE AND SCHEDULE WORK WITH THE PORT. KEEP PERSONNEL, MATERIALS, AND EQUIPMENT CLEAR OF PUBLIC BOAT LAUNCH ACTIVITIES AND WITHIN AREA(S) OF CONSTRUCTION DESIGNATED.
3. VERIFY DIMENSIONS AND DETAILS, EXISTING AND NEW, PRIOR TO FABRICATION OR CONSTRUCTION.
4. ANY DAMAGE BY THE CONTRACTOR TO EXISTING FEATURES, STRUCTURES, OR UTILITIES THAT ARE TO REMAIN SHALL BE REPAIRED AT NO EXPENSE TO THE PORT.
5. DO NOT ALLOW DEBRIS OF ANY KIND TO FALL INTO THE WATER. IMMEDIATELY REMOVE ALL DEBRIS THAT FALLS INTO THE WATER.
6. SUPPLY, INSTALL, AND MAINTAIN AT ALL TIMES FLOATING DEBRIS BOOMS AROUND ALL IN WATER AND OVERWATER WORK AREAS.
7. PERFORM WORK IN ACCORDANCE WITH ALL PERMIT REQUIREMENTS AND ALL PERTINENT AND APPLICABLE BEST MANAGEMENT PRACTICES.

REFERENCE DRAWINGS

REFERENCE DRAWINGS ARE AVAILABLE FOR THE PHASE I WORK, CONTACT PORT FOR A COPY. MAKE SITE VISITS AND OBSERVATIONS SUFFICIENT TO VERIFY DETAILS FOR ALL WORK BEFORE CONSTRUCTION ACTIVITIES.

CODES AND STANDARDS

1. USE THE MOST CURRENT EDITIONS OF CODES AND STANDARDS UNLESS OTHERWISE NOTED. FOR CONFLICTS BETWEEN CODES AND/OR STANDARDS, THE MORE STRICT PROVISION, AS DETERMINED BY THE PORT, SHALL APPLY.
2. METHODS AND MATERIALS: CONFORM TO THE INTERNATIONAL BUILDING CODE (IBC) 2012 EDITION, AS AMMENDED AND ADOPTED BY THE CITY OF HOQUIAM.
3. CONCRETE WORK: CONFORM THE AMERICAN CONCRETE INSTITUTE (ACI) "STRUCTURAL CONCRETE FOR BUILDINGS" (ACI 301), 2010 EDITION, AND "BUILDING CODE REQUIREMENTS FOR STRUCTURAL CONCRETE AND COMMENTARY" (ACI 318), 2014 EDITION.
4. STRUCTURAL AND MISCELLANEOUS STEEL FABRICATION AND ERECTION: CONFORM TO THE AMERICAN INSTITUTE OF STEEL CONSTRUCTION (AISC) "SPECIFICATION FOR STRUCTURAL STEEL BUILDINGS" (AISC 360) 2010 EDITION AND "CODE OF STANDARD PRACTICE FOR STEEL BUILDINGS AND BRIDGES" (AISC 303) 2010 EDITION.
5. WELDING OF STRUCTURAL AND MISCELLANEOUS STEEL: CONFORM TO THE AMERICAN WELDING SOCIETY (AWS) "STRUCTURAL WELDING CODE - STEEL" (AWS D1.1), 2010 EDITION.
6. TIMBER ELEMENTS: CONFORM TO THE WEST COAST LUMBER INSPECTION BUREAU "STANDARD GRADING RULES FOR WEST COAST LUMBER - NO. 17", CURRENT EDITION.
7. TIMBER CONSTRUCTION: CONFORM TO THE AMERICAN WOOD COUNCIL "NATIONAL DESIGN SPECIFICATION FOR WOOD CONSTRUCTION", 2012 EDITION.
8. TIMBER PRESERVATIVE TREATMENT AND TREATED TIMBER HANDLING: CONFORM TO THE AMERICAN WOOD PROTECTION ASSOCIATION (AWPA) "WOOD PRESERVATIVE STANDARDS", CURRENT EDITION, AND THE WESTERN WOOD PRESERVERS INSTITUTE (WWPI) "BEST MANAGEMENT PRACTICES FOR THE USE OF TREATED WOOD IN AQUATIC AND WETLAND ENVIRONMENTS" (BMPs), CURRENT EDITION.
9. STANDARD SPECIFICATIONS FOR ROAD, BRIDGE, AND MUNICIPAL CONSTRUCTION (M41-10), 2014 EDITION, BY THE WASHINGTON STATE DEPARTMENT OF TRANSPORTATION.

DEMOLITION

1. CONTAIN REMOVAL AND DEMOLITION WITHIN THE LIMITS DESIGNATED ON THE DRAWINGS. DO NOT DAMAGE EXISTING STRUCTURES, UTILITIES, OR FACILITIES TO REMAIN DURING REMOVAL OR DEMOLITION WORK. SEE GENERAL NOTE 4.
2. SALVAGE EXISTING CONCRETE RAMP PLANKS AS DIRECTED BY THE PORT. CONSTRUCTION EQUIPMENT SHALL NOT BE DRIVEN ON EXISTING CONCRETE RAMP PLANK TO BE SALVAGE.
3. ALL REMOVED OR DEMOLISHED MATERIALS, EXCEPT AS NOTED, BECOME THE PROPERTY OF THE CONTRACTOR. COMPLETELY REMOVE, HANDLE, AND DISPOSE OF ALL SUCH MATERIALS, INCLUDING CREOSOTE-TREATED AND ASBESTOS-CONTAINING MATERIALS (ACM), IN ACCORDANCE WITH LOCAL, STATE, AND FEDERAL REQUIREMENTS.
4. A HAZARDOUS MATERIALS SURVEY HAS NOT BEEN CONDUCTED AT THIS SITE, BUT IT IS BELIEVED THE PROBABILITY OF ENCOUNTERING CREOSOTE-TREATED OR ACM MATERIALS IS LOW.

STEEL PILING

1. GENERAL

A. STEEL PILING: CONFORM TO ASTM A 252, GRADE 3 WITH A MINIMUM YIELD STRENGTH OF 50 KSI.

B. LIMIT THE NUMBER OF SPLICES TO ONE PER PILE WITH A MINIMUM LENGTH OF 15 FEET PER PIECE. SPLICE PILES WITH COMPLETE PENETRATION BUTT WELDS IN ACCORDANCE WITH AWS. PERFORM SPLICES IN A PERMANENT AISC APPROVED FABRICATION FACILITY UNLESS OTHERWISE APPROVED BY THE PORT.

C. HOT-DIP GALVANIZE GUIDE PILES IN ACCORDANCE WITH THE AMERICAN SOCIETY FOR TESTING AND MATERIALS (ASTM) SPECIFICATIONS ASTM A123 AND ASTM A153.

D. COAT GUIDE PILES AFTER GALVANIZING AND COAT GROUNDING PILES IN ACCORDANCE WITH CONTRACT DOCUMENTS.

E. SEE THE SPECIFICATIONS FOR ADDITIONAL REQUIREMENTS.

2. DRIVING

A. INSTALL PILING TO THE TIP ELEVATIONS INDICATED ON THE DRAWINGS.

B. INSTALL PILING WITH A VIBRATORY HAMMER.

C. KEEP PILE INSTALLATION LOGS AND PROVIDE TO THE PORT DAILY. SEE SPECIFICATIONS FOR ADDITIONAL REQUIREMENTS.

D. REMOVE ANY PILE DAMAGED DURING HANDLING OR INSTALLATION OR INSTALLED IN THE WRONG LOCATION AND INSTALL ANOTHER PILE IN ITS PLACE AT NO ADDITIONAL COST TO THE PORT.

3. CUT-OFF

A. CUTOFF PILES LEVEL UNLESS OTHERWISE INDICATED. FOR A PILE PROVIDING BEARING, INSTALL BEARING PLATE TO PROVIDE FULL BEARING.

B. DO NOT ALLOW PILE CUT OFFS OR CUTTING DEBRIS TO FALL INTO THE WATER OR INSIDE THE PIPE PILE.

CAST-IN-PLACE CONCRETE

1. CAST-IN-PLACE CONCRETE: MINIMUM COMPRESSIVE STRENGTH = 5,000 PSI, MAXIMUM RATIO OF WATER TO CEMENTITIOUS MATERIALS = 0.40. SEE SPECIFICATIONS FOR ADDITIONAL REQUIREMENTS.
2. REINFORCING STEEL: ASTM A 706 GRADE 60, DEFORMED, GALVANIZED PER ASTM A 767.

STRUCTURAL STEEL

1. SHAPES, PLATES, AND BARS: ASTM A 572, YIELD STRENGTH = 50 KSI, TYPICAL. ANGLES AND CHANNELS SHALL BE ASTM A 36, YIELD STRENGTH = 36 KSI.
2. WIDE FLANGE STRUCTURAL SECTIONS (W): ASTM A992
3. HOLLOW STRUCTURAL SECTIONS (HSS): ASTM A 500, GRADE C, YIELD STRENGTH = 50 KSI
4. PIPE: ASTM A 53, GRADE B
5. FASTENERS: ASTM A 307 GRADE A BOLTS, ASTM A 563 NUTS, AND ASTM F 844 WASHERS. PROVIDE MALLEABLE IRON WASHERS UNDER ALL NUTS AND BOLT HEADS BEARING ON TIMBER OR PLASTIC UNLESS NOTED OTHERWISE.
6. EMBEDDED THREADED RODS (ALSO CALLED ANCHOR BOLTS): ASTM F 1554, GRADE 55
7. HOT-DIP GALVANIZE ALL MATERIALS IN ACCORDANCE WITH ASTM A 123, ASTM A 153, OR ASTM F 2329 AS APPLICABLE. GALVANIZE ITEMS AFTER FABRICATION.
8. REPAIR DAMAGE TO HOT-DIP GALVANIZING IN ACCORDANCE WITH ASTM A 780, ANNEX A1.
9. COAT FABRICATIONS AFTER GALVANIZING WHERE INDICATED.
10. SEE SPECIFICATIONS FOR ADDITIONAL REQUIREMENTS.

STRUCTURAL TIMBER

1. GENERAL

A. MATERIAL: PACIFIC COAST DOUGLAS FIR, GRADE NO. 1 PER WCLIB.

B. SURFACE TIMBER AS NOTED ON THE DRAWINGS, SURFACE FOUR SIDES UNLESS NOTED OTHERWISE.

C. BOLT HOLES: 1/16 INCH LARGER THAN THE BOLT DIAMETER.

2. TIMBER PRESERVATIVE TREATMENT
PRESSURE-TREAT TIMBER WITH WATERBORNE PRESERVATIVES IN ACCORDANCE WITH AWPA STANDARD U1 TO THE REQUIREMENTS OF USE CATEGORY 5A (UC5A). INCORPORATE AND ADHERE TO THE BMPs SET FORTH BY THE WWPI.

3. HANDLING AND STORAGE
AFTER TREATMENT, CARE FOR PRESSURE-TREATED TIMBER IN ACCORDANCE WITH AWPA STANDARD M4.

4. SEE SPECIFICATIONS FOR ADDITIONAL REQUIREMENTS.

STRUCTURAL COMPOSITES

1. PLASTIC TIMBER PILE CAPS: FIBERFORCE PLASTIC MATERIAL, BLACK IN COLOR, PRODUCED BY BEDFORD TECHNOLOGY (1-800-721-9037) OR EQUAL APPROVED BY THE ENGINEER AT TIME OF BID.
2. UHMP-PE: ASTM D 4020 WITH UV-STABILIZATION, BLACK IN COLOR.
3. PLASTIC SHIM MATERIAL: SEAPILE COMPOSITE PLASTIC PILES, PRODUCED BY TRELLEBORG, (1-540-667-5191) OR EQUAL APPROVED BY ENGINEER AT TIME OF BID.
4. HOT-DIP GALVANIZE ALL HARDWARE.
5. BOLT HOLES: 1/16 INCH LARGER THAN THE BOLT DIAMETER.
6. SEE SPECIFICATIONS FOR ADDITIONAL REQUIREMENTS.

SPECIAL INSPECTIONS

ELEMENTS REQUIRING SPECIAL INSPECTIONS PER IBC CHAPTER 17 ARE AS FOLLOWS.
1. PILING
2. CONCRETE
3. REINFORCING STEEL
4. BOLTS INSTALLED IN CONCRETE
5. STRUCTURAL WELDING
6. DRILLED-IN CONCRETE DOWELS

DATUMS

1. VERTICAL CONTROL IS CITY OF HOQUIAM MLLW = EL 0.00.
2. PORT OF GRAYS HARBOR STATE TIDELANDS HORIZONTAL DATUM.

CONTRACTOR-DESIGNED STRUCTURES

THE FOLLOWING UNFACTORED HORIZONTAL DESIGN LOADS SHALL BE CONSIDERED FOR THE STRUCTURES DESIGNED AND PROVIDED BY THE CONTRACTOR.

FLOATS (ANY DIRECTION)

A.	DEBRIS IMPACT, PLUS	5.6 KIPS
B.	COMBINED WAVE AND CURRENT	400 PLF

DESIGN CRITERIA

THE FOLLOWING UNFACTORED HORIZONTAL DESIGN LOADS WERE CONSIDERED FOR THE GUIDE PILING DESIGN.

FLOATS

B.	DEBRIS IMPACT	5.6 KIPS
C.	COMBINED WAVE AND CURRENT	400 PLF ON FLOAT 180 LBS ON PILE

ABBREVIATIONS

ACI	AMERICAN CONCRETE INSTITUTE
ACM	ASBESTOS-CONTAINING MATERIALS
AISC	AMERICAN INSTITUTE OF STEEL CONSTRUCTION
AITC	AMERICAN INSTITUTE OF TIMBER CONSTRUCTION
ALT	ALTERNATE
API	AMERICAN PETROLEUM INSTITUTE
APPROX	APPROXIMATE
ASTM	AMERICAN SOCIETY FOR TESTING AND MATERIALS
AWPA	AMERICAN WOOD PROTECTION ASSOCIATION
AWS	AMERICAN WELDING SOCIETY
BMP	BEST MANAGEMENT PRACTICES
BOT	BOTTOM
BTWN	BETWEEN
CDF	CONTROLLED DENSITY FILL
CIP	CAST-IN-PLACE
CJ	CONSTRUCTION JOINT
CJP	COMPLETE JOINT PENETRATION
CL	CENTER LINE
CLR	CLEAR
CMP	CORRUGATED METAL PIPE
CPP	CONCRETE PAVEMENT PRESERVATION
DIA	DIAMETER
Ø	DIAMETER
DWG	DRAWING
E	EAST, EASTING
EA	EACH
EF	EACH FACE
EHW	EXTREME HIGH WATER
EL	ELEVATION
ELW	EXTREME LOW WATER
ELEV	ELEVATION
EQ	EQUAL
EXIST	EXISTING
EW	EACH WAY
FG	FINISHED GRADE
FT	FEET
GR	GRADE
GV	GATE VALVE
H	HORIZONTAL
HDG	HOT-DIP GALVANIZE(D)
HS	HIGH STRENGTH
IBC	INTERNATIONAL BUILDING CODE
IE	INVERT ELEVATION
ID	INNER DIAMETER, IDENTIFICATION
IN	INCH
K, KIP	1000 POUNDS
KLF	KIPS PER LINEAL FOOT
KSI	KIP PER SQUARE INCH
LB(S)	POUNDS
LF	LINEAL FEET
LONG	LONGITUDINAL
MB	MACHINE BOLT
MAG	MAG SURVEY NAIL
MHHW	MEAN HIGHER HIGH WATER
MIN	MINIMUM
MLLW	MEAN LOWER LOW WATER
N	NORTH, NORTHING
NO,#	NUMBER
NTS	NOT TO SCALE
NW	NORTHWEST
OC	ON CENTER
OD	OUTER DIAMETER

ABBREVIATIONS CONTINUED

PCF	POUNDS PER CUBIC FOOT
PGH	PORT OF GRAYS HARBOR
PL	PLATE
POC	POINT OF CONNECTION
PSI	POUNDS PER SQUARE INCH
PT	POINT
QTY	QUANTITY
REQ'D	REQUIRED
RPC	RED PLASTIC CAP
S	SLOPE
SD	STORM DRAIN
SDMH	STORM DRAIN MANHOLE
SE	SOUTHEAST
SHT	SHEET
SIM	SIMILAR
SPA	SPACE(S)
SS	SANITARY SEWER
SSMH	SANITARY SEWER MANHOLE
STD	STANDARD
TOA	TOP OF ASPHALT
TOC	TOP OF CONCRETE
TR	THRUST RESTRAINT
TYP	TYPICAL
UHMW-PE	ULTRA HIGH MOLECULAR WEIGHT POLYETHYLENE
V	VERTICAL
W	WEST
W/	WITH
WCLIB	WEST COAST LUMBER INSPECTION BUREAU
WQCB	WATER QUALITY CATCH BASIN
WSDOT	WASHINGTON STATE DEPARTMENT OF TRANSPORTATION
WWPI	WESTERN WOOD PRESERVERS INSTITUTE
X-ING	CROSSING
Z	ELEVATION

LEGEND

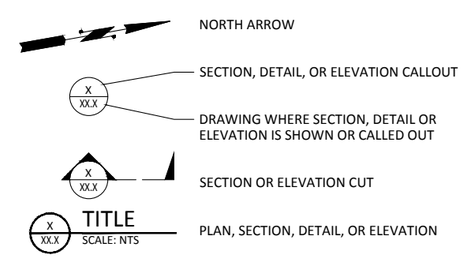

BID DOCUMENTS

MARK	REVISION DESCRIPTION	BY	APP.	DATE

BergerABAM
33301 9th Avenue South, Suite 300
Federal Way, Washington 98003-2600
(206) 431-2300 Fax: (206) 431-2250

SCOTT BRANLUND STATE OF WASHINGTON REGISTERED PROFESSIONAL ENGINEER

DRAWN BY MDB
DESIGN BY GDN
CHECK BY CSB
PROJ MGR CSB

PORT OF GRAYS HARBOR
28TH STREET BOAT LAUNCH IMPROVEMENTS
CONSTRUCTION PHASE II

GENERAL NOTES

DRAWING NO. G-2
PROJECT NO. FAWAT-12-145
DATE: 10/30/17
SHEET NO. 2 OF 48

Last Saved by: Garth.nelson on Jul 27, 2017 3:00 PM File: Q:\FederalWay\2012\FAWAT-12-145\CADD\Dwgs\PhaseII\P21_G02.dwg

Copyright © BergerABAM. All Rights Reserved.

UPLAND CIVIL SPECIFICATIONS - INTRODUCTION

1. THERE ARE TWO BID ITEMS RELATED TO UPLAND CIVIL WORK. ONE ITEM IS "TRENCH EXCAVATIONS SAFETY STSTEMS" (RCW 39.04.180), AND ALL OTHER WORK SHALL BE INCLUDED IN THE SECOND BID ITEM "UPLAND CIVIL WORK". UPLAND CIVIL WORK IS A LUMP SUM ITEM AND IS A COMBINATION OF ALL WORK AND SPECIFICATIONS SHOWN ON THE GENERAL "G" AND CIVIL "C" DRAWINGS.
2. CONTRACTOR SHALL PROVIDE, CONSTRUCT, MAINTAIN AND REMOVE SAFETY SYSTEMS FOR TRENCH EXCAVATIONS THAT MEET REQUIREMENTS OF THE WASHINGTON INDUSTRIAL SAFETY AND HEALTH ACT (WISHA), RCW 49.17, WASHINGTON ADMINISTRATIVE CODE (WAC) 296-24, 296-62, & 296-155, AND EM-385-1-1 COE SAFETY MANUAL. MOST STRINGENT REQUIREMENTS GOVERN. ALSO REFER TO SPECIFICATIONS - EARTHWORK.
3. GRADING: SLOPE FINISH GRADE SURFACES UNIFORMLY BETWEEN ELEVATIONS, BREAKLINES, AND PROFILES SHOWN ON DRAWINGS.
4. STABILIZE FILL SLOPES WITH GRASS, EITHER APPROVED SEED MIX, HYDRO SEED OR SOD.
5. IN AREA WHERE ON-STREET PARKING IS TO BE CONSTRUCTED ALONG 28TH STREET, EXISTING UTILITY FEATURES SHALL REMAIN AND BE PROTECTED AS NOTED BELOW:
   A. WOOD POWER / COMM POLES AND ASSOCIATED GUY ANCHORS SHALL REMAIN WITHOUT MODIFICATIONS.
   B. UTILITY BOXES, SUCH AS VALVE BOXES, MANHOLE LIDS, ETC., SHALL BE ADJUSTED TO BE FLUSH WITH FINISH GRADE.
   C. EXISTING FIRE HYDRANTS SHALL BE PROTECTED WITH (4) BOLLARDS IN ACCORDANCE WITH WSDOT STD PLAN H-60.20-01, TYPE 2. SPACE BOLLARDS 6'-0" APART IN SQUARE ORIENTATION CENTERED ON FIRE HYDRANT. PREP, PRIME, AND PAINT STEEL POSTS ABOVE FINISHED GRADE SAFETY YELLOW.
6. DEMO AND REMOVE FROM SITE EXISTING STREET SIGNS ON WEST SIDE OF 28TH STREET AND SWING GATE AS INSTRUCTED BY PORT.
7. ALL SITE FEATURES NOT SPECIFICALLY ADDRESSED IN PROJECT SPECIFICATION SHALL BE CONSTRUCTED IN ACCORDANCE WITH APPLICABLE SECTIONS OF WSDOT M41-10, STANDARD SPECIFICATIONS FOR ROAD, BRIDGE, AND MUNICIPAL CONSTRUCTION, 2014.

SECTION 31 00 00 - EARTHWORK

PART 1 - GENERAL

1.01 SUMMARY

A. EXTENT OF WORK: THE WORK INCLUDES THE REQUIREMENTS FOR EXCAVATING, BACKFILLING, GRADING AND DISPOSING OF SURPLUS OR UNSUITABLE EXCAVATED MATERIAL FOR CONSTRUCTION OF ROADWAYS, PARKING AREAS, STRUCTURES, BURIED UTILITIES AND ASSOCIATED WORK. THE EXTENT AND LOCATION OF THE "EARTHWORK" IS INDICATED ON THE PLANS.

1.02 REFERENCES

A. WASHINGTON STATE DEPARTMENT OF TRANSPORTATION (WSDOT): STANDARD SPECIFICATIONS FOR ROAD, BRIDGE, AND MUNICIPAL CONSTRUCTION, 2014.

1.03 DEFINITIONS

A. EXCESS MATERIAL: SOIL MATERIAL THAT IS GEOTECHNICALLY SUITABLE FOR BACKFILL, BUT CANNOT BE REUSED ON SITE DUE TO LACK OF FILL SPACE, AND SHALL BE DISPOSED OF OFF SITE.
B. GEOTECHNICALLY SUITABLE MATERIAL FOR FILL OR BACKFILL: EXCAVATED SOILS THAT DO NOT CONTAIN OBJECTIONABLE MATERIAL OR STONES GREATER THAN 3-INCHES IN ANY DIMENSION, AND WHICH HAVE STRENGTH AND STABILITY WITH A MOISTURE CONTENT THAT WILL ALLOW COMPACTION TO SPECIFIED DENSITY.
C. GEOTECHNICALLY UNSUITABLE MATERIAL FOR FILL OR BACKFILL: EXCAVATED SOILS THAT DO NOT COMPLY WITH THE REQUIREMENTS FOR SATISFACTORY MATERIAL, THAT HAVE INSUFFICIENT STRENGTH CHARACTERISTICS OR STABILITY, AND/OR MATERIAL THAT CONTAINS DEBRIS, TRASH, ROOTS, WOOD, SCRAP MATERIALS, VEGETATION OR OTHER ORGANIC MATTER, REFUSE, FROZEN, OR OTHER OBJECTIONABLE DELETERIOUS MATERIALS.
D. NATIVE FILL / BACKFILL: EXCAVATED SOIL MATERIAL THAT IS GEOTECHNICALLY SUITABLE FOR REUSE AS FILL OR BACKFILL.
E. SELECT OR STRUCTURAL FILL: SHALL BE IMPORTED BORROW MATERIAL AND MEET THE REQUIREMENTS OF SELECT FILL / BACKFILL OF THIS SECTION.

1.04 QUALITY ASSURANCE

A. INSPECTION AND TESTING: SAMPLING AND TESTING OF MATERIALS AND INSTALLATIONS SHALL BE PERFORMED BY THE CONTRACTOR AT NO COST TO THE PORT. TESTS, TESTING METHODS, AND RESULTS SHALL BE AS SPECIFIED IN THE PERTINENT SECTIONS OF THE WSDOT STANDARD SPECIFICATIONS.

1.05 SUBMITTALS

A. SUBMIT TEST REPORTS FOR THE FOLLOWING:
   1. SELECT FILL MATERIAL SIEVE ANALYSIS.
   2. PIPE BEDDING MATERIAL SIEVE ANALYSIS.
   3. COMPACTION CONTROL TESTING FOR SUBGRADE AND BACKFILL AS REQUIRED PER THIS SECTION.
   4. CDF - MIX DESIGN AND COMPRESSIVE STRENGTH RESULTS BASED ON ACTUAL TEST RESULTS FROM THE PROPOSED MIX DESIGN SHOWING CONFORMANCE WITH WSDOT STANDARD SPECIFICATIONS.
   5. SOIL HANDLING AND STOCKPILING PLAN - SUBMIT A DESCRIPTION OF THE PROPOSED PLAN FOR EXCAVATIONS, HANDLING AND STOCKPILING. INCLUDE DESCRIPTION OF INTENDED LOCATION(S) OF STOCKPILES RELATIVE TO THE SEQUENCING AND SCHEDULING OF WORK IN THE CONTRACTOR'S WORK AREA THROUGHOUT CONSTRUCTION. THIS SUBMITTAL IS FOR THE PORT'S GENERAL INFORMATION AND IN NO WAY RELIEVES THE CONTRACTOR OF COMPLETE RESPONSIBILITY FOR THE SUCCESSFUL PERFORMANCE OF THE WORK.

PART 2 - PRODUCTS

2.01 GENERAL

A. ALL GRANULAR MATERIALS SHALL MEET THE APPLICABLE REQUIREMENTS OF WSDOT STANDARD SPECIFICATIONS FOR ROAD, BRIDGE, AND MUNICIPAL CONSTRUCTION, 2014 EDITION.
B. OTHER MATERIALS SHALL BE OF THE QUALITY, SIZE, SHAPE, GRADATION, OR EQUAL TO THE MANUFACTURER AS SPECIFIED HEREIN.

2.02 NATIVE FILL/BACKFILL

A. FILL/BACKFILL MATERIAL SHALL BE NATIVE, IN-SITU EXCAVATED MATERIAL THAT IS GEOTECHNICALLY SUITABLE FOR REUSE. BACKFILL SHALL BE FREE FROM ORGANIC MATTER OR OTHER DELETERIOUS SUBSTANCES.

2.03 PIPE ZONE BEDDING MATERIAL

A. UTILITIES BEDDING SHALL MEET ALL THE APPROPRIATE REQUIREMENTS OF SECTION 9-03 OF WSDOT STANDARD SPECIFICATIONS AND SHALL MEET THE GRADING REQUIREMENTS OF SECTION 9-03.12(3) - GRAVEL BACKFILL FOR PIPE ZONE BEDDING, INCLUDING CONFORMANCE TO SAND EQUIVALENT REQUIREMENTS. WHERE SAND IS CALLED OUT ON DRAWINGS FOR PIPE ZONE BEDDING, MATERIAL SHALL BE WASHED SAND IN ACCORDANCE WITH WSDOT SECTION 9-03.1(2)B, CLASS 1.

2.04 UNDERGROUND MARKING TAPE

A. UNDERGROUND MARKING TAPE SHALL CONSIST OF INERT POLYETHYLENE PLASTIC, 4-MIL THICKNESS, 6 INCHES WIDE, AND IS IMPERVIOUS TO ALL KNOWN ALKALIS, ACIDS, CHEMICAL REAGENTS, AND SOLVENTS LIKELY TO BE ENCOUNTERED IN THE SOIL, WITH A METALLIC FOIL CORE TO PROVIDE THE MOST POSITIVE DETECTION FOR PIPELINE LOCATORS.
B. THE TAPE SHALL BE COLOR-CODED AND SHALL BE IMPRINTED CONTINUOUSLY OVER ITS ENTIRE LENGTH IN PERMANENT BLACK INK. THE MESSAGE SHALL CONVEY THE TYPE OF LINE BURIED BELOW AND SHALL ALSO HAVE THE WORD "CAUTION" PROMINENTLY SHOWN. COLOR-CODING AND WIDTH OF THE TAPE SHALL BE CONSISTENT WITH WSDOT STANDARD SPECIFICATIONS, SECTION 9-15.18.

2.05 CONTROLLED DENSITY FILL (CDF)

A. CONTROLLED DENSITY FILL (ALSO MAY BE REFERRED TO AS LEAN CONCRETE) SHALL MEET THE REQUIREMENTS OF THE WSDOT STANDARD SPECIFICATIONS, SECTION 2-09.3(1)E, EXCEPT MIX SHALL HAVE A MINIMUM 28-DAY STRENGTH OF 300 PSI AND A MAXIMUM 28-DAY STRENGTH NOT TO EXCEED 1000 PSI.

2.06 MATERIAL BENEATH UTILITY STRUCTURES

A. A MINIMUM THICKNESS OF 6-INCHES OF COMPACTED BASE COURSE AGGREGATE SHALL BE USED BENEATH UPLAND UTILITY STRUCTURES. REFER TO SPECIFICATION SECTION 32 11 24 FOR BASE COURSE MATERIAL.

2.07 SELECT FILL/BACKFILL

A. SELECT FILL/BACKFILL MATERIAL SHALL BE IN ACCORDANCE WITH WSDOT STANDARD SPECIFICATIONS SECTION 9-03.14(2), AND SHALL BE CLEAN, FREE-DRAINING, SANDY GRAVEL OR GRAVELLY SAND OBTAINED FROM NATURAL DEPOSITS. INDIVIDUAL PARTICLES SHALL BE FREE FROM ALL OBJECTIONABLE COATING. THE MATERIAL SHALL CONTAIN NO ORGANIC MATTER OR SOFT FRIABLE PARTICLES IN QUANTITIES CONSIDERED OBJECTIONABLE BY THE ENGINEER.

2.08 QUARRY SPALLS

A. WHERE BOTTOM OF EXCAVATION ENCOUNTERS GROUNDWATER FOR UTILITY STRUCTURES, OVER EXCAVATE AND PLACE A MINIMUM THICKNESS OF 2-FEET OF QUARRY SPALLS BENEATH STANDARD BASE MATERIAL. ALSO USE QUARRY SPALLS AT END OF STORM DRAINAGE PIPE OUTLETS TO PREVENT EROSION AND DISSIPATE ENERGY FROM WATER. UNLESS OTHERWISE NOTED, QUARRY SPALL SPLASH PAD SHALL BE 1'-0" THICK, 4'-0" WIDE, AND 8'-0" LONG WITH TOP OF SPALLS LEVEL WITH SURROUNDING GRADE. ALL QUARRY SPALL MATERIALS SHALL MEET THE REQUIREMENTS OF WSDOT STANDARD SPECIFICATIONS, SECTION 9_13.6.

PART 3 - EXECUTION

3.01 GENERAL

A. CLEARING, GRUBBING, AND CLEANUP SHALL BE IN ACCORDANCE WITH WSDOT SECTION 2_01.
B. EXCAVATING AND GRADING OF NATURALLY OCCURRING MATERIALS, WHETHER NATIVE TO THE SITE OR IMPORTED, WHICH IS MADE A PART OF THIS CONTRACT, SHALL BE REMOVED OR PLACED WITHIN THE TOLERANCES ESTABLISHED OR WITHIN REASONABLY CLOSE CONFORMITY TO THE ALIGNMENT GRADE AND CROSS SECTIONS INDICATED ON THE PLANS OR AS ESTABLISHED BY THE ENGINEER.
C. ALL MATERIALS EXCAVATED FOR TRENCHING OR STRUCTURES, AND MEETING THE REQUIREMENTS OF GEOTECHNICALLY SUITABLE MATERIAL, SHALL BE RETURNED TO THE EXCAVATION AS DIRECTED BY THE ENGINEER. ALL GEOTECHNICALLY UNSUITABLE EXCAVATED MATERIAL SHALL BE PROPERLY DISPOSED OF OFF-SITE.

3.02 EXCAVATION

A. EXCAVATION: SHALL BE THE REMOVAL OF NATURALLY OCCURRING EARTH, SAND, GRAVEL, CLAYS, PAVEMENT OR MIXTURES OF THE ABOVE, REQUIRED TO BE MOVED, WHICH IS NOT OTHERWISE DESIGNATED AS EXCESS SOIL OR GEOTECHNICALLY UNSUITABLE SOIL. EXCAVATION MATERIAL SHALL BE MOVED WITH THE USE OF MECHANICAL EQUIPMENT, SUCH AS SHOVELS, LOADERS, BULLDOZERS, GRADERS, ETC., BUT SHALL NOT REQUIRE DRILLING AND BLASTING OR DRILLING AND LINE BREAKING. EXCAVATION BY SLUICING METHOD IS NOT PERMITTED. THE EXCAVATION SHALL BE ACCOMPLISHED IN ACCORDANCE WITH THE SPECIFICATION REQUIREMENTS AND MAY INCLUDE INCIDENTAL WORK INCLUDING, BUT NOT LIMITED TO, REMOVAL OF STRUCTURES OR PORTIONS THEREOF; CONSTRUCTION AND SUBSEQUENT REMOVAL OF SHORING; PUMPING OR DEWATERING OF EXCAVATED AREAS; PROTECTION OF EXCAVATED MATERIALS FROM THE WEATHER; AND PLACEMENT AND COMPACTION OF EXCAVATED MATERIAL AS BACKFILL.
B. PROTECTING STOCKPILES: EXCAVATED MATERIAL STOCKPILED FOR LATER USE AS BACKFILL MATERIAL SHALL BE PROTECTED FROM WEATHER DAMAGE BY COVERING WITH WATERPROOF SHEETING OR OTHER MEANS AS NECESSARY. SEE THE PLANS AND SECTION 31 32 11 FOR FURTHER REQUIREMENTS.
C. SEPARATION OF STOCKPILES: GEOTECHNICALLY UNSUITABLE MATERIAL SHALL BE STOCKPILED SEPARATELY FROM MATERIAL CONSIDERED TO BE GEOTECHNICALLY SUITABLE FOR REUSE.
D. UNSUITABLE EXCAVATION: SHALL CONSIST OF EXCAVATION, REMOVAL, DISPOSAL, AND REPLACEMENT OF GEOTECHNICALLY UNSUITABLE / UNSTABLE MATERIALS. UNSUITABLE MATERIALS BENEATH PAVEMENTS AND ADJACENT TO STRUCTURES SHALL BE REMOVED TO THE DEPTH REQUIRED TO MEET COMPACTION REQUIREMENTS. EXCAVATED UNSUITABLE MATERIAL SHALL BE REPLACED WITH SUITABLE EXCAVATED NATIVE BACKFILL MATERIAL TO THE EXTENT THERE ARE SUFFICIENT QUANTITIES OF EXCAVATED NATIVE BACKFILL MATERIAL AVAILABLE, AND IMPORTED SELECT FILL OTHERWISE.
E. TRENCH AND STRUCTURE EXCAVATION: SHALL BE ACCOMPLISHED TO THE LINES AND GRADES SHOWN ON THE PLANS OR AS DESIGNATED BY THE ENGINEER. TRENCH EXCAVATION SHALL CONSIST OF THE REMOVAL, PLACEMENT, OR DISPOSAL OF ALL FORMATIONS AS DESCRIBED ABOVE IN "EXCAVATION." PRIOR TO PLACING ANY UTILITY PIPING, CONDUIT, CONCRETE STRUCTURES, ETC., THE TRENCH SHALL BE CLEANED OF ALL UNSUITABLE MATERIAL, BACKFILLED AS SHOWN ON THE PLANS WITH THE SPECIFIED BEDDING MATERIAL, AND COMPACTED AS DEFINED HEREIN.
F. THE CONTRACTOR SHALL MAINTAIN AT ALL TIMES DURING EXECUTION OF THIS WORK, SAFE AND STABLE EXCAVATIONS USING OSHA AND WAC 296-155 PART N REQUIRED TRENCH SAFETY SHORING SYSTEMS.
G. TRENCHES AND EXCAVATIONS SHALL NOT BE GREATER IN WIDTH THAN IS NECESSARY TO PERMIT CONSTRUCTION IN ACCORDANCE WITH THE PLANS AND THESE SPECIFICATIONS. TRENCHES FOR PIPING, CONDUIT OR UTILITY STRUCTURES 4-FEET OR DEEPER SHALL HAVE SHORING, SUCH AS TRENCH BOXES, TO MINIMIZE AMOUNT OF EXISTING PAVEMENT AND SOIL DISTURBANCE.

3.03 BACKFILL

A. PLACEMENT AND COMPACTION OF FILL AND/OR BACKFILL SHALL BE MADE WITH MATERIAL FROM THE EXCAVATION, AND SHALL BE CONSIDERED A NECESSARY PART OF, AND INCIDENTAL TO, THE EXCAVATION, EXCEPT WHERE SPECIFICATIONS PROVIDE FOR THE BACKFILL MATERIAL TO BE IMPORTED / OBTAINED FROM A DESIGNATED SOURCE.
B. WATER EXISTING IN THE EXCAVATED AREA SHALL BE REMOVED BY PUMPING OR OTHER MEANS BEFORE BACKFILLING. BACKFILL MATERIAL SHALL NOT BE PLACED ON SURFACES THAT ARE MUDDY OR "PUMPING."
C. SUBGRADE SHALL BE COMPACTED PRIOR TO BACKFILLING. BACKFILL LIFTS SHALL NOT BE PLACED OVER SUBGRADE WITHOUT PRIOR APPROVAL OF THE ENGINEER.
D. PLACE BACKFILL MATERIALS IN HORIZONTAL LAYERS NOT EXCEEDING 8 INCHES IN LOOSE THICKNESS AND COMPACT EACH LAYER TO 95 PERCENT OF THE MAXIMUM DRY DENSITY AS DETERMINED BY THE MODIFIED PROCTOR (ASTM D 1557) TEST PROCEDURE. GRADE THE BACKFILL TO MEET THE REQUIREMENTS SHOWN ON THE DRAWINGS.
E. DO NOT PLACE BACKFILL AGAINST ANY CONCRETE STRUCTURE OR THRUST BOCKS UNTIL THE CONCRETE HAS ACHIEVED A MINIMUM STRENGTH OF 0.75 F'C OR HAS SET AND CURED AT LEAST 7 DAYS, OR LONGER IF SPECIFIED IN RELATED SECTIONS.
F. BACKFILL AROUND UTILITIES IN TRENCHES WITH UTILITIES BEDDING MATERIAL. FINE-GRADE THE BEDDING MATERIAL TO THE REQUIRED SLOPE AND EXCAVATE TO ACCOMMODATE BELL AND SPIGOT JOINTS SO THE ENTIRE LENGTH OF EACH PIPE WILL BE UNIFORMLY SUPPORTED. BEDDING MATERIAL SHALL BE PLACED IN HORIZONTAL LAYERS NOT TO EXCEED EIGHT INCHES IN LOOSE THICKNESS AND CAREFULLY COMPACTED BY THE USE OF SMALL VIBRATORY OR MECHANICAL COMPACTORS UNTIL THE REQUIRED COVER ABOVE THE TOP OF THE PIPE IS ACHIEVED. SUBSEQUENT LAYERS OF TRENCH BACKFILL SHALL NOT EXCEED EIGHT INCHES IN LOOSE THICKNESS AND MAY BE COMPACTED BY ANY METHOD THAT WILL NOT EXCEED THE ALLOWABLE STRESSES FOR THE PIPE. EACH LAYER SHALL BE COMPACTED TO 95% OF THE MATERIAL'S MAXIMUM DRY DENSITY AS DETERMINED BY THE MODIFIED PROCTOR COMPACTION TEST (ASTM D 1557). CDF SHALL BE USED AS TRENCH BACKFILL WHERE INDICATED ON THE DRAWINGS OR AS DIRECTED BY THE ENGINEER.
G. ALL BACKFILL PLACED WITHIN EXCAVATIONS SHALL BE NATIVE BACKFILL OR IMPORTED SELECT FILL BORROW MATERIAL.

3.04 UNDERGROUND MARKING TAPE

A. THE CONTRACTOR SHALL PROVIDE AN APPROVED UNDERGROUND MARKING TAPE TO MARK ALL UNDERGROUND UPLAND UTILITY AND CONDUIT LINES INSTALLED AS PART OF THIS CONTRACT. THE UNDERGROUND MARKING TAPE SHALL EXTEND THE FULL LENGTH OF EACH SUCH LINE AND SHALL BE PLACED 1 FOOT BELOW SUBGRADE.

3.05 COMPACTION

A. COMPACTION SHALL BE PERFORMED WITH APPROVED COMPACTION EQUIPMENT SUITED TO THE SOIL BEING COMPACTED. OVERCOMPACTION OR EXCESS VIBRATION SHALL BE AVOIDED. MOISTEN OR AERATE MATERIAL AS NECESSARY TO PROVIDE THE MOISTURE CONTENT THAT WILL READILY FACILITATE OBTAINING THE SPECIFIED COMPACTION WITH THE EQUIPMENT USED. COMPACT THE TOTAL AREA OF BACKFILL IN UNIFORM PASSES. IN AREAS OF LIMITED ACCESS, AS DETERMINED BY THE ENGINEER, COMPACT THE BACKFILL BY USING HAND OR HAND-OPERATED POWER TAMPERS. WHILE BACKFILL IS BEING PLACED IN LAYERS, OPERATE THE COMPACTION EQUIPMENT CONTINUOUSLY. EACH LIFT OF MATERIAL PLACED SHALL BE UNIFORMLY COMPACTED TO THE DENSITY INDICATED FOR THE SPECIFIC MATERIAL AND USE SET FORTH IN THESE SPECIFICATIONS. THE PERCENT OF DENSITY REQUIRED IS IN RELATION TO THE MAXIMUM DENSITY OBTAINABLE AT OPTIMUM MOISTURE CONTENT (COMPACTION CONTROL DENSITY).

3.06 COMPACTION CONTROL TESTS

A. LABORATORY AND FIELD TESTS SHALL BE PERFORMED BY THE CONTRACTOR TO DETERMINE COMPLIANCE WITH THESE SPECIFICATIONS USING AN INDEPENDENT TESTING AND INSPECTION SERVICE.
B. COMPACTION CONTROL DENSITY SHALL BE THE MAXIMUM DENSITY AT OPTIMUM MOISTURE CONTENT AS DETERMINED BY ASTM D 1557, STANDARD METHODS FOR MOISTURE-DENSITY RELATIONSHIPS OF SOIL AND SOIL AGGREGATES, METHODS B, C OR D AS APPLICABLE. TESTS SHALL BE PERFORMED FOR EACH TYPE OF MATERIAL OR SOURCE OF MATERIAL TO DETERMINE THE OPTIMUM MOISTURE AND LABORATORY MAXIMUM DENSITY VALUES. THIS INCLUDES TESTING OF EXCAVATED MATERIAL TO BE USED AS BACKFILL. THE NUMBER OF TESTS SHALL BE DEPENDENT ON THE VARIATION OF MATERIALS WITH LOCATION AND SHALL BE APPROVED BY THE ENGINEER. IT IS ANTICIPATED THAT MULTIPLE TESTS WILL BE REQUIRED. ADDITIONAL TESTS SHALL BE PERFORMED WHEN ANY CHANGE IN MATERIAL OCCURS THAT MAY AFFECT THE OPTIMUM MOISTURE CONTENT OR LABORATORY MAXIMUM DENSITY.
C. FIELD TESTS TO DETERMINE IN-PLACE COMPLIANCE WITH REQUIRED DENSITIES AS SPECIFIED, SHALL BE PERFORMED IN ACCORDANCE WITH ASTM D 1556, D 2167, OR D 2922.
   1. IN-PLACE DENSITIES OF SUBGRADES: SHALL BE CHECKED BY A QUALIFIED GEOLOGIST, GEOTECHNICAL ENGINEER, OR TESTING LAB USING A T-PROBE TO VERIFY THE CONDITIONS OF THE SUBGRADE AND ABILITY OF THE SUBGRADE TO SUPPORT THE BACKFILL AND SUPERIMPOSED LOADS.
   2. IN-PLACE DENSITY OF BACKFILLS: ONE TEST PER 1,000 SQUARE FEET OR FRACTION THEREOF OF EACH LIFT FOR BACKFILL AREAS COMPACTED BY OTHER THAN HAND OR HAND-OPERATED MACHINES. THE DENSITY FOR EACH LIFT OF BACKFILL MATERIALS FOR TRENCHES OR AREAS LESS THAN 6 FEET IN WIDTH, WHICH ARE COMPACTED WITH HAND OR HAND-OPERATED MACHINES, SHALL BE TESTED AS FOLLOWS: ONE TEST PER EACH AREA LESS THAN 200 SQUARE FEET FOR EACH LIFT, OR ONE TEST FOR EACH 25 LINEAR FEET OR MORE IN LENGTH PER LIFT. IF ASTM D 2922 IS USED, IN-PLACE DENSITIES SHALL BE CHECKED BY ASTM D 1556 AS FOLLOWS: ONE CHECK PER LIFT FOR EACH 100 LINEAR FEET OF LONG NARROW BACKFILLS, AND A MINIMUM OF TWO CHECKS PER LIFT FOR OTHER BACKFILL AREAS. AT THE ENGINEER'S OPTION, THE NUMBER OF TESTS MAY BE REDUCED IF CONSISTENT CONDITIONS AND COMPACTION EFFORTS ARE DEMONSTRATED, OR INCREASED IF NECESSARY.
D. COMPACTION CONTROL DENSITY SHALL BE BASED ON THE MAXIMUM DENSITY AT OPTIMUM MOISTURE CONTENT AS DETERMINED BY ASTM D1557, STANDARD METHODS FOR MOISTURE-DENSITY RELATIONSHIPS OF SOIL AND SOIL AGGREGATES, METHODS B, C OR D AS APPLICABLE.

3.07 GRADING AND LEVELING

A. THE FINISHED SUBGRADE PROFILES OF THE ENTIRE AREA SHALL BE GRADED WITHIN A TOLERANCE OF PLUS OR MINUS 0.05 FOOT IN 10 FEET, READY FOR CRUSHED ROCK BASE WHEREVER PAVEMENT IS TO BE FURNISHED.
B. DO NOT PLACE ANY STRUCTURE, REINFORCING STEEL, OR PAVEMENT ON SUBGRADE WITHOUT ENGINEER'S PRIOR APPROVAL OF SUBGRADE COMPACTION.

3.08 PREPARATION FOR BASE COURSE OR GRAVEL SURFACING

A. PREPARATION OF SUBGRADE: IMMEDIATELY PRIOR TO PLACEMENT OF SURFACING MATERIALS, CLEAN THE ENTIRE WIDTH OF THE AREA OF ALL DEBRIS AND DISPOSE OF AS DIRECTED BY THE ENGINEER. ALL DEPRESSIONS OR RUTS THAT CONTAIN STORM WATER SHALL BE DRAINED. SHAPE THE ENTIRE SUBGRADE TO A SMOOTH UNIFORM SURFACE, TRUE TO LINE, GRADE, AND CROSS SECTION. COMPACT SUBGRADE MATERIAL FOR A DEPTH OF 6 INCHES BELOW THE TOP OF SUBGRADE TO 95% OF THE MAXIMUM DENSITY AS DETERMINED BY COMPACTION TESTS ASTM DESIGNATION D1557. IF SOFT OR SPONGY MATERIAL UNDERLYING THE UPPER 6 INCHES OF THE AREA BEING PREPARED PRECLUDES SATISFACTORY COMPACTION OF THE UPPER 6 INCHES, LOOSEN, AERATE, OR EXCAVATE, REPLACE AND COMPACT TO THE REQUIRED DENSITY AS DIRECTED BY THE ENGINEER. REMOVE AND DISPOSE OF EXCESS MATERIAL. SUBGRADE AREAS DEFICIENT IN MATERIALS SHALL BE BROUGHT TO GRADE BY IMPORTING SUITABLE MATERIALS FROM OTHER EXCAVATION AREAS, OR BY IMPORTING SELECT FILL MATERIAL WHEN DIRECTED BY THE ENGINEER. MATERIALS ADDED TO SUBGRADE AREAS DEFICIENT IN MATERIALS SHALL BE WATERED AND COMPACTED AS NECESSARY TO YIELD A TRUE FINISHED SUBGRADE AS DESCRIBED ABOVE. ONCE IT IS PREPARED, MAINTAIN THE SUBGRADE FOR SURFACING IN THE FINISHED CONDITION UNTIL THE FIRST COURSE OF SURFACING HAS BEEN PLACED.
B. FINISHING BASE COURSES: BEFORE ANY PAVING MATERIAL IS PLACED, THE BASE COURSE SHALL BE BROUGHT TO THE PROPER LINE, GRADE, AND CROSS SECTION. THE BASE COURSE SHALL BE SO MAINTAINED UNTIL THE PAVING IS PLACED.
   1. COMPACT THE BASE COURSE FOR PAVEMENT TO 95 PERCENT OF MAXIMUM DENSITY AS DEFINED FOR COMPACTION CONTROL DENSITY, IN ARTICLE 3.06 "COMPACTION CONTROL TESTS" OF THIS SECTION, TO A MINIMUM DEPTH OF 6 INCHES AND TO A WIDTH THAT WILL ACCOMMODATE THE PAVING EQUIPMENT.
C. BASE COURSE PROTECTION: TAKE ALL PRECAUTIONS NECESSARY TO PROTECT THE BASE COURSE FROM DAMAGE; HAULING OVER THE FINISHED BASE COURSE SHALL BE LIMITED TO THAT WHICH IS ESSENTIAL FOR CONSTRUCTION PURPOSES. EQUIPMENT USED FOR HAULING OVER THE PREPARED BASE COURSE WHICH, IN THE OPINION OF THE ENGINEER, IS CAUSING UNDUE DAMAGE TO THE PREPARED BASE COURSE OR TO THE UNDERLYING MATERIALS, SHALL BE REMOVED FROM THE WORK AT THE REQUEST OF THE ENGINEER. REPAIR AT THE CONTRACTOR'S EXPENSE ALL CUTS, RUTS, AND BREAKS IN THE SURFACE OF THE BASE COURSE PRIOR TO PLACING SURFACING, TREATED BASE, OR PAVING MATERIALS. PROTECT THE PREPARED BASE COURSES FROM BOTH THE CONTRACTOR'S TRAFFIC AND TERMINAL TRAFFIC AND MAINTAIN THE BASE COURSE BY BLADING AND ROLLING AS FREQUENTLY AS MAY BE NECESSARY TO PRESERVE THE BASE COURSE IN A COMPLETELY SATISFACTORY CONDITION.
   1. NO MEASUREMENT OR PAYMENT WILL BE MADE FOR THE WORK INVOLVED IN PROTECTION OF THE BASE COURSE.

3.09 SUBGRADE PREPARATION FOR PAVED AREA

A. PREPARATION OF SUBGRADE: IMMEDIATELY PRIOR TO PLACEMENT OF SURFACING MATERIALS, CLEAN THE ENTIRE WIDTH OF THE AREA OF ALL DEBRIS AND DISPOSE OF AS DIRECTED BY THE ENGINEER. ALL DEPRESSIONS OR RUTS THAT CONTAIN STORM WATER SHALL BE DRAINED. SHAPE THE ENTIRE SUBGRADE TO A SMOOTH UNIFORM SURFACE, TRUE TO LINE, GRADE, AND CROSS SECTION IN ACCORDANCE WITH THE PLANS AND TO THE SATISFACTION OF THE ENGINEER. COMPACT THE SUBGRADE MATERIAL TO A DEPTH OF 12 INCHES TO 95% OF THE MATERIAL'S MAXIMUM DRY DENSITY AS DETERMINED BY THE MODIFIED PROCTOR COMPACTION TEST, ASTM DESIGNATION D1557. IF SOFT OR SPONGY MATERIAL UNDERLYING THE SUBGRADE PRECLUDES SATISFACTORY COMPACTION, LOOSEN, AERATE, OR EXCAVATE, REPLACE AND COMPACT TO THE REQUIRED DENSITY AS DIRECTED BY THE ENGINEER.
B. MATERIALS ADDED TO SUBGRADE AREAS DEFICIENT IN MATERIALS SHALL BE WATERED AND COMPACTED AS NECESSARY TO YIELD A TRUE FINISHED SUBGRADE AS DESCRIBED ABOVE. ONCE IT IS PREPARED, MAINTAIN THE SUBGRADE FOR SURFACING IN THE FINISHED CONDITION UNTIL THE FIRST COURSE OF SURFACING HAS BEEN PLACED.
C. FINISHED SUBGRADES: BEFORE ANY PAVING MATERIAL IS PLACED, THE BASE SHALL BE BROUGHT TO THE PROPER LINE, GRADE, AND CROSS SECTION AND SHALL BE SO MAINTAINED UNTIL THE PAVING IS PLACED.

3.10 RECONDITIONING OF SUBGRADES

A. WHERE APPROVED COMPACTED SUBGRADES ARE DISTURBED BY THE CONTRACTOR'S SUBSEQUENT OPERATIONS OR ADVERSE WEATHER, SCARIFY THE SUBGRADES AND COMPACT TO THE REQUIRED DENSITY PRIOR TO FURTHER CONSTRUCTION THEREON.

3.11 SURFACE MAINTENANCE

A. LEAVE THE SURFACE FREE OF STONES OR DEBRIS AND WET AS NECESSARY FOR DUST CONTROL. MAINTAIN THE SURFACE UNTIL THE FINAL SURFACE TREATMENT IS APPLIED.

3.12 EXCESS MATERIAL DISPOSAL

A. THE CONTRACTOR SHALL BE RESPONSIBLE FOR THE DISPOSAL OF SOILS THAT THE ENGINEER CONFIRMS TO BE EXCESS MATERIAL. THE EXCESS SOILS SHALL BE DISPOSED OF AWAY FROM PORT-OWNED PROPERTY AT A LOCATION PERMITTED TO RECEIVE THE TYPE OF EXCESS SOILS TO BE DISPOSED.

3.13 UNSUITABLE SOIL DISPOSAL

A. THE CONTRACTOR SHALL BE RESPONSIBLE FOR THE DISPOSAL OF SOILS CONFIRMED TO BE GEOTECHNICALLY UNSUITABLE BY THE ENGINEER. THE UNSUITABLE SOILS SHALL BE DISPOSED OF AWAY FROM PORT-OWNED PROPERTY AT A LOCATION PERMITTED TO RECEIVE THE TYPE OF UNSUITABLE SOILS TO BE DISPOSED.

BID DOCUMENTS

MARK	REVISION DESCRIPTION	BY	APP.	DATE

BergerABAM
33301 9th Avenue South, Suite 300
Federal Way, Washington 98003-2600
(206) 431-2300 Fax: (206) 431-2250

SCOTT BRANLUND STATE OF WASHINGTON REGISTERED PROFESSIONAL ENGINEER

DRAWN BY MDB
DESIGN BY GDN
CHECK BY CSB
PROJ MGR CSB

PORT OF GRAYS HARBOR
28TH STREET BOAT LAUNCH IMPROVEMENTS
CONSTRUCTION PHASE II

UPLAND CIVIL SPECIFICATIONS - SHEET 1

DRAWING NO. G-3
PROJECT NO. FAWAT-12-145
DATE: 10/30/17
SHEET NO. 3 OF 48

Last Saved by: Garth.nelson on: Jul 27, 2017 3:00 PM File: Q:\FederalWay\2012\FAWAT-12-145\CADD\Dwgs\Phase_II\P21_G03.dwg

Copyright © BergerABAM. All Rights Reserved.

SECTION 31 32 11 - TEMPORARY EROSION & SEDIMENTATION CONTROL

PART 1 - GENERAL

1.01 DESCRIPTION OF WORK

A. THIS ITEM CONSISTS OF PLANNING, INSTALLING, INSPECTING, MAINTAINING, AND REMOVING TEMPORARY EROSION AND SEDIMENT CONTROL BEST MANAGEMENT PRACTICES (BMPS) AS SHOWN ON THE DRAWINGS, REQUIRED BY DEPARTMENT OF ECOLOGY, OR AS ORDERED BY THE ENGINEER TO PREVENT POLLUTION OF AIR AND WATER, AND CONTROL, RESPOND TO, AND DISPOSE OF ERODED SEDIMENT AND TURBID WATER DURING THE LIFE OF THE CONTRACT

B. IN ORDER TO COMPLY WITH THE REQUIREMENTS OF THIS SECTION, THE CONTRACTOR SHALL:

1. DEVELOP AND SUBMIT A CONTRACTOR'S EROSION AND SEDIMENT CONTROL PLAN (CESCP).
2. DEVELOP AND SUBMIT A CONSTRUCTION SWPPP IN ACCORDANCE WITH REQUIREMENTS DESCRIBED IN STORMWATER MANAGEMENT MANUAL FOR WESTERN WASHINGTON, VOLUME II, TITLED CONSTRUCTION STORMWATER POLLUTION PREVENT, 2012.
3. ARRANGE AN ON-SITE MEETING AT A MUTUALLY AGREEABLE DATE AND TIME WITH THE PORT AND THE ENGINEER PRIOR TO BEGINNING ANY SITE WORK;
4. REVISE AND MODIFY THE CONSTRUCTION SWPPP DURING THE LIFE OF THE CONTRACT;
5. INSTALL, MAINTAIN, AND REMOVE ALL EROSION PREVENTION, CONTAINMENT, AND COUNTERMEASURES BMPS DURING THE LIFE OF THE CONTRACT;
6. CONTAIN, CLEANUP AND PROPERLY MANAGE OR DISPOSE OF ALL DISPLACED SEDIMENTS AND TURBID WATER;
7. PERFORM OTHER WORK SHOWN ON THE CONTRACT PLANS OR AS DIRECTED BY THE ENGINEER.
8. PROPERLY INSPECT CONSTRUCTION SWPPP REQUIREMENTS INCLUDING BMPS AS REQUIRED; FACILITATE, PARTICIPATE IN, AND IMPLEMENT DIRECTED CORRECTIVE ACTIONS RESULTING FROM INSPECTIONS CONDUCTED BY OTHERS INCLUDING OUTSIDE AGENCIES AND PORT EMPLOYEES/CONSULTANTS.

1.02 SUBMITTALS

A. AS PART OF THE REQUIRED PRECONSTRUCTION SUBMITTALS, THE CONTRACTOR SHALL SUBMIT A CONTRACTOR'S EROSION AND SEDIMENT CONTROL PLAN (CESCP) AND A CONSTRUCTION SWPPP.

1.03 ADMINISTRATIVE REQUIREMENTS

A. THE PROVISIONS OF THIS SECTION SHALL APPLY TO THE CONTRACTOR, SUBCONTRACTORS AT ALL TIERS, SUPPLIERS AND ALL OTHERS WHO MAY HAVE ACCESS TO THE WORK SITE BY WAY OF THE CONTRACTOR'S ACTIVITIES.

B. FAILURE TO INSTALL, MAINTAIN, AND/OR REMOVE BMPS SHOWN ON THE DRAWINGS AND SPECIFIED HEREIN, OR BY ORDER OF THE ENGINEER; OR FAILURE TO COMPLY, IMPLEMENT AND MAINTAIN ANY PROVISIONS AND REQUIREMENTS OF THIS SECTION; OR FAILURE TO CONDUCT PROJECT OPERATIONS IN ACCORDANCE WITH THIS SECTION WILL RESULT IN THE SUSPENSION OF THE CONTRACTOR'S OPERATIONS BY THE ENGINEER.

C. THE CONTRACTOR SHALL BE SOLELY RESPONSIBLE FOR ANY DAMAGES, FINES, LEVIES, OR JUDGMENTS INCURRED AS A RESULT OF CONTRACTOR, SUBCONTRACTOR, OR SUPPLIER NEGLIGENCE IN COMPLYING WITH THE REQUIREMENTS OF THIS SECTION.

D. ANY DAMAGES, FINES, LEVIES, OR JUDGMENTS INCURRED AS A RESULT OF CONTRACTOR, SUBCONTRACTOR, OR SUPPLIER NEGLIGENCE IN COMPLYING WITH THE REQUIREMENTS OF THIS SECTION WILL BE DEDUCTED FROM PAYMENT DUE BY MODIFICATION.

E. THE CONTRACTOR SHALL BE SOLELY RESPONSIBLE FOR ANY SCHEDULE IMPACTS FROM DAMAGES, FINES, LEVIES, JUDGMENTS, OR STOP WORK ORDERS INCURRED AS A RESULT OF CONTRACTOR, SUBCONTRACTOR, OR SUPPLIER NEGLIGENCE IN COMPLYING WITH THE REQUIREMENTS OF THIS SECTION. THE PROJECT SCHEDULE WILL NOT BE CHANGED TO ACCOMMODATE THE TIME LOST.

F. CONTRACTOR SHALL NOT CLEAR, GRUB, GRADE, OR PERFORM ANY EARTHWORK AFTER NOTICE TO PROCEED UNTIL THE FOLLOWING HAS BEEN INSTALLED PER STORMWATER MANAGEMENT MANUAL FOR WESTERN WASHINGTON, VOLUME II, CHAPTER 4, TITLED CONSTRUCTION STORMWATER POLLUTION PREVENT, 2012, OR AS DIRECTED BY THE ENGINEER:

1. SILT FENCE OR OTHER PERIMETER BARRIER CONTROLS ARE IN PLACE, DOE BMP C233;
2. AREAS NOT TO BE DISTURBED ARE DELINEATED WITH SAFETY FENCE, DOE BMP C103;
3. ALL CONSTRUCTION ENTRANCES ARE STABILIZED, DOE BMP C105;
4. CATCH BASIN INSERTS ARE INSTALLED IN ALL CATCH BASINS THAT MAY RECEIVE DRAINAGE FROM THE WORK AREA, DOE BMP C220;
5. OTHER BMPS THAT MAY BE REQUIRED DURING COURSE OF CONSTRUCTION:
   a. PLASTIC SHEETING, DOE BMP C123
   b. TEMPORARY AND PERMANENT SEEDING, DOE BMP C120
   c. SODDING, DOE BMP C124
   d. TOPSOILING / COMPOSTING, DOE BMP C125
6. MATERIALS ON HAND, IN QUANTITIES SUFFICIENT TO COVER ALL BARE SOIL, DIVERT ALL FLOWS, CONTAIN ALL SEDIMENTS, AND PREVENT TURBID DISCHARGES FROM THE SITE DURING ALL STAGES OF CONSTRUCTION. THESE MATERIALS INCLUDE, BUT ARE NOT LIMITED TO THE FOLLOWING:
   a. MATERIALS ON HAND, DOE BMP C150
   b. DUST CONTROL, DOE BMP C140
   c. SAW-CUTTING / SURFACE POLLUTION PREVENTION, DOE BMP C126
   d. WATTLES, DOE BMP C235

1.04 AUTHORITY OF ENGINEER

A. THE ENGINEER HAS THE AUTHORITY TO LIMIT THE SURFACE AREA OF ERODIBLE EARTH MATERIAL EXPOSED BY DEMOLITION OR REMOVAL OF ASPHALT PAVEMENT, TO LIMIT THE SURFACE AREA OF ERODIBLE EARTH MATERIAL EXPOSED BY EXCAVATION, BORROW AND FILL OPERATIONS, AND TO DIRECT THE CONTRACTOR TO PROVIDE IMMEDIATE PERMANENT OR TEMPORARY POLLUTION CONTROL MEASURES TO MINIMIZE CONTAMINATION OF ADJACENT WATERCOURSES OR AREAS OF WATER IMPOUNDMENT.

B. IN THE EVENT THAT TEMPORARY EROSION AND POLLUTION CONTROL MEASURES ARE REQUIRED DUE TO THE CONTRACTOR'S NEGLIGENCE, CARELESSNESS, OR FAILURE TO INSTALL PERMANENT CONTROLS AS A PART OF THE WORK AS SCHEDULED OR ARE ORDERED BY THE ENGINEER, SUCH WORK SHALL BE PERFORMED BY THE CONTRACTOR AT HIS/HER OWN EXPENSE.

C. THE ENGINEER MAY INCREASE OR DECREASE THE AREA OF ERODIBLE EARTH MATERIAL TO BE EXPOSED AT ONE TIME AS DETERMINED BY ANALYSIS OF PROJECT CONDITIONS.

D. IN THE EVENT THAT AREAS ADJACENT TO THE WORK AREA ARE SUFFERING DEGRADATION DUE TO EROSION, SEDIMENT DEPOSIT, WATER FLOWS, OR OTHER CAUSES, THE ENGINEER MAY STOP CONSTRUCTION ACTIVITIES UNTIL THE SITUATION IS RECTIFIED.

PART 2 - PRODUCTS - NOT USED.

AS SPECIFIED IN STORMWATER MANAGEMENT MANUAL FOR WESTERN WASHINGTON, VOLUME II, CHAPTER 4, TITLED CONSTRUCTION STORMWATER POLLUTION PREVENT, 2012

PART 3 - EXECUTION

3.01 GENERAL

A. IN THE EVENT OF CONFLICT BETWEEN THESE REQUIREMENTS AND POLLUTION CONTROL LAWS, RULES, OR REGULATIONS OF OTHER FEDERAL, STATE, OR LOCAL AGENCIES, THE MORE RESTRICTIVE LAWS, RULES, OR REGULATIONS SHALL APPLY.

3.02 CONTRACTOR'S EROSION AND SEDIMENT CONTROL PLAN (CESCP)

A. IN ORDER TO COMPLY WITH THESE REQUIREMENTS, THE CONTRACTOR SHALL INCLUDE AND ADDRESS THE FOLLOWING IN THE CESCP:

1. SITE DESCRIPTION AND DRAWINGS
   a. INCLUDED IN THE CESCP SHALL BE A WRITTEN DESCRIPTION OF THE CONSTRUCTION SITE, INCLUDING LOCATION OF STAGING AREAS, STOCKPILE AREAS, MATERIAL STORAGE AREAS, NATURAL AND CONSTRUCTED DRAINAGE SYSTEMS WITHIN THE WORK AREA AND STAGING AREAS.
   b. DRAWINGS SHALL BE INCLUDED IN THE CESCP WHICH SHOW THE LOCATION OF THE CONSTRUCTION SITE, INCLUDING LOCATION OF STAGING AREAS, STOCKPILE AREAS, MATERIAL STORAGE AREAS, NATURAL AND CONSTRUCTED DRAINAGE SYSTEMS WITHIN THE WORK AREA AND STAGING AREAS.
   c. THE DRAWINGS SHALL SHOW LOCATIONS OF BMPS DURING EACH PHASE OF CONSTRUCTION AS IDENTIFIED BY THE CONTRACTOR IN THE PROJECT SCHEDULE.
2. CONTRACTOR EROSION AND SEDIMENT CONTROL PERSONNEL
   a. THE CONTRACTOR SHALL DESIGNATE ONE EMPLOYEE AS THE RESPONSIBLE REPRESENTATIVE IN CHARGE OF EROSION AND SEDIMENTATION CONTROL.
   b. THE DESIGNATED EMPLOYEE SHALL BE THE CONTRACTOR EROSION AND SEDIMENT CONTROL LEAD (CESCL) WHO IS RESPONSIBLE FOR ENSURING COMPLIANCE WITH ALL REQUIREMENTS OF THIS SECTION.
   c. BY NOTICE TO PROCEED, THE CESCL SHALL HAVE SUCCESSFULLY COMPLETED THE "STORMWATER: CONSTRUCTION BEST MANAGEMENT PRACTICES (BMPS) FIELD TRAINING" COURSE OFFERED BY THE ASSOCIATED GENERAL CONTRACTORS EDUCATION FOUNDATION (206 284-4500), OR OTHER COURSE APPROVED BY THE WASHINGTON STATE DEPARTMENT OF ECOLOGY AND AS DIRECTED BY THE ENGINEER.
   d. THE CESCL SHALL HAVE AUTHORITY TO ACT ON BEHALF OF THE CONTRACTOR AND SHALL BE AVAILABLE, ON CALL, 24 HOURS PER DAY THROUGHOUT THE PERIOD OF CONSTRUCTION.
   e. THE CESCP SHALL INCLUDE THE NAME, TELEPHONE NUMBER, FAX NUMBER, AND ADDRESS OF THE DESIGNATED CESCL.
   f. DUTIES AND RESPONSIBILITIES OF THE CESCL SHALL INCLUDE:
      1) MAINTAINING THE CESCP, AND ANY ASSOCIATED PERMITS AND PLANS;
      2) DIRECTING BMP INSTALLATION, INSPECTION, MAINTENANCE, MODIFICATION, AND REMOVAL;
      3) AVAILABILITY 24 HOURS PER DAY, 7 DAYS PER WEEK BY TELEPHONE;
      4) UPDATING ALL DRAWINGS WITH CHANGES MADE TO THE PLAN;
      5) KEEPING DAILY LOGS;
      6) PREPARE AND SUBMIT FOR APPROVAL A CONTRACTOR EROSION AND SEDIMENT CONTROL PLAN (CESCP);
      7) IDENTIFY THE POINTS WHERE STORM WATER RUNOFF, IF ANY, POTENTIALLY LEAVES THE SITE, IS COLLECTED IN A SURFACE WATER CONVEYANCE SYSTEM AND TAKE CORRECTIVE MEASURES TO PREVENT THIS FROM OCCURING;
      8) IF WATER SHEET FLOWS FROM THE SITE, TAKE CORRECTIVE MEASURE TO PREVENT THIS FROM OCCURRING;
      9) INSPECT CESCP REQUIREMENTS INCLUDING BMPS AS REQUIRED TO ENSURE ADEQUACY; FACILITATE, PARTICIPATE IN, AND TAKE CORRECTIVE ACTIONS RESULTING FROM INSPECTIONS PERFORMED BY OUTSIDE AGENCIES, PORT EMPLOYEES, AND PORT CONSULTANTS.
3. SCHEDULE
   a. THE CESCP SHALL INCLUDE:
      1) SCHEDULES FOR ACCOMPLISHMENT OF TEMPORARY AND PERMANENT EROSION CONTROL WORK, AS ARE APPLICABLE FOR CLEARING AND GRUBBING; GRADING; CONSTRUCTION; DEMOLITION; PAVING; STRUCTURES AT WATERCOURSES, SAW CUTTING, AND DEWATERING;
      2) PROPOSED METHOD OF EROSION AND DUST CONTROL AND A PLAN FOR DISPOSAL OF WASTE MATERIALS;
      3) ESTIMATED REMOVAL DATE OF ALL TEMPORARY BMPS;
      4) ESTIMATED DATE OF FINAL SITE STABILIZATION.
   b. EROSION CONTROL WORK ACTIVITIES CONSISTENT WITH THE CECSP SHALL BE INCLUDED IN THE PROJECT SCHEDULE.
4. BMP INSTALLATION
   a. THE CESCP SHALL INCLUDE INSTALLATION INSTRUCTIONS AND DETAILS FOR EACH BMP USED DURING THE LIFE OF THE PROJECT;
   b. INSTALLATION INSTRUCTIONS AND DETAILS SHALL BE EQUIVALENT TO THE:
   c. "STORMWATER MANAGEMENT MANUAL FOR THE PUGET SOUND REGION," DEPT. OF ECOLOGY; 2012 (CURRENT VERSION)
5. BMP MAINTENANCE
6. THE CESCP SHALL INCLUDE A DESCRIPTION OF THE MAINTENANCE AND INSPECTION PROCEDURES TO BE USED FOR THE LIFE OF THE PROJECT.
   a. BMPS SHALL BE MAINTAINED FOR THE LIFE OF THE PROJECT OR UNTIL REMOVED BY ORDER OF THE ENGINEER;
   b. BMPS SHALL BE MAINTAINED DURING ALL SUSPENSIONS OF WORK AND ALL NON-WORK PERIODS;
   c. BMPS SHALL BE MAINTAINED AND REPAIRED AS NEEDED TO ASSURE CONTINUED PERFORMANCE OF THEIR INTENDED FUNCTION AND IN ACCORDANCE WITH THE APPROVED CESCP;
   d. SEDIMENTS REMOVED DURING BMP MAINTENANCE SHALL BE PLACED AWAY FROM NATURAL AND CONSTRUCTED STORM WATER CONVEYANCES AND DISPOSED OF OFF SITE.
7. BMP INSPECTION
   a. AT A MINIMUM, INSPECT ALL TESC BMPS:
      1) WEEKLY AND AFTER ANY MEASURABLE RAIN EVENT (0.5 INCH OR GREATER) BETWEEN APRIL 1ST AND SEPTEMBER 31ST;
      2) DAILY AND AFTER ANY MEASURABLE RAIN EVENT (0.5 INCH OR GREATER) BETWEEN OCTOBER 1ST AND MARCH 31ST.
   b. DEFICIENCIES IDENTIFIED DURING THE INSPECTION SHALL BE CORRECTED WITHIN 24 HOURS OR AS DIRECTED BY THE ENGINEER.
   c. NOTE REPAIRS OR IMPROVEMENTS NEEDED, IF ANY, AND NOTIFY CESCL OR SITE PROJECT SUPERINTENDENT TO IMPLEMENT IMPROVEMENTS;
   d. OBSERVE SITE DURING STORMS TO ENSURE RUNOFF IS NOT LEAVING THE SITE, AND TAKE CORRECTIVE MEASURES TO PREVENT IT FROM CONTINUING IF IT IS.;
   e. IMPLEMENT ADDITIONAL BMPS, IF NEEDED, TO ADDRESS SITE-SPECIFIC EROSION CONTROL;
   f. INSPECT STREETS SURROUNDING SITE FOR DIRT TRACKING;
   g. INSPECT FOR DUST DURING DRY PERIODS.
8. RECORD KEEPING
   a. REPORTS SUMMARIZING THE SCOPE OF INSPECTIONS, THE PERSONNEL CONDUCTING THE INSPECTION, THE DATE(S) OF THE INSPECTION, MAJOR OBSERVATIONS RELATING TO THE IMPLEMENTATION OF THE CESCP, AND ACTIONS TAKEN AS A RESULT OF THESE INSPECTIONS SHALL BE PREPARED AND RETAINED AS A PART OF THE CESCP;
   b. ALL INSPECTION REPORTS SHALL BE KEPT ON-SITE DURING THE LIFE OF THE PROJECT AND AVAILABLE FOR REVIEW UPON REQUEST OF THE ENGINEER.
9. BMP REMOVAL
   a. BEFORE PROJECT CLOSEOUT, ALL SEDIMENT SHALL BE REMOVED FROM TEMPORARY AND PERMANENT DRAINAGE CONVEYANCES, DITCHES, CULVERTS, CHANNELS, TO MAINTAIN OPERATION;
   b. SEDIMENT REMOVED SHALL BE PLACED AWAY FROM DRAINAGE CONVEYANCES AND DISPOSED OF OFF SITE.
   c. ALL TEMPORARY BMPS SHALL BE REMOVED UPON PERMANENT STABILIZATION OR AS DIRECTED BY THE ENGINEER;
   d. AREAS DISTURBED DURING REMOVAL OF TEMPORARY BMPS SHALL BE PERMANENTLY STABILIZED;
   e. PERMANENT STABILIZATION SHALL OCCUR UPON INSTALLATION OF CONCRETE OR ASPHALT PAVEMENT.
10. EMERGENCY RESPONSE
   a. THE CESCP SHALL CONTAIN INFORMATION ON HOW THE CONTRACTOR SHALL CONTROL AND RESPOND TO TURBID WATER DISCHARGES, SEDIMENT MOVEMENT, AND FUGITIVE DUST. AT A MINIMUM, THE CONTRACTOR'S EMPLOYEE RESPONSIBLE FOR, OR FIRST NOTICING, THE DISCHARGES SHALL TAKE APPROPRIATE IMMEDIATE ACTION TO PROTECT THE WORK AREA, PRIVATE PROPERTY, AND THE ENVIRONMENT (E.G., DIKING TO PREVENT POLLUTION OF STATE WATERS). APPROPRIATE ACTION INCLUDES BUT IS NOT LIMITED TO THE FOLLOWING:
      1) HAZARD ASSESSMENT-ASSESS THE SOURCE, EXTENT, AND QUANTITY OF THE DISCHARGE.
      2) SECUREMENT AND PERSONAL PROTECTION- IF THE DISCHARGE CANNOT BE SAFELY AND EFFECTIVELY CONTROLLED, THEN IMMEDIATELY NOTIFY THE CESCL AND THE ENGINEER. IF THE DISCHARGE CAN BE SAFELY AND EFFECTIVELY CONTROLLED, PROCEED IMMEDIATELY WITH ACTION TO PROTECT THE WORK AREA, PRIVATE PROPERTY, AND THE ENVIRONMENT.
      3) CONTAINMENT AND ELIMINATION OF SOURCE- CONTAIN THE DISCHARGE WITH SILT FENCE, PIPES, SAND BAGS OR A SOIL BERM DOWN SLOPE FROM THE AFFECTED AREA. ELIMINATE THE SOURCE OF THE DISCHARGE BY PUMPING TURBID WATER TO A CONTROLLED AREA, BUILDING BERMS, PIPING CLEAN WATER AWAY FROM THE AREA OR OTHER MEANS NECESSARY.
      4) CLEANUP-WHEN CONTAINMENT IS COMPLETE, CHEMICALLY TREAT TURBID WATER, REMOVE SEDIMENT AND STABILIZE ON SITE, OR OTHER METHODS TO PREVENT FUTURE DISCHARGE.
      5) NOTIFICATION-REPORT ALL DISCHARGES IMMEDIATELY TO THE ENGINEER.
11. CONSTRUCTION DEWATERING
   a. STORM WATER AND CONSTRUCTION DEWATERING OPERATIONS SHALL NOT DISCHARGE TO THE STORM DRAIN SYSTEM (SDS) AT ANY TIME, REGARDLESS OF THE POLLUTANT CONCENTRATION. BEFORE DISCHARGE TO APPROVED LOCATIONS, WATER SHALL BE MEASURED AND TESTED TO MEET THE REQUIREMENT OF THE RECEIVING LOCATION.

3.03 CONSTRUCTION REQUIREMENTS

A. SAW CUTTING
1. SAW CUT SLURRY AND CUTTINGS SHALL BE VACUUMED DURING CUTTING OPERATIONS;
2. SAW CUT SLURRY AND CUTTINGS SHALL NOT REMAIN ON PERMANENT CONCRETE OR ASPHALT PAVEMENT OVERNIGHT;
3. SAW CUT SLURRY AND CUTTINGS SHALL NOT DRAIN TO SDS, IWS, OR ANY OTHER NATURAL OR CONSTRUCTED DRAINAGE CONVEYANCE;
4. COLLECTED SLURRY AND CUTTINGS ARE THE RESPONSIBILITY OF THE CONTRACTOR AND SHALL BE DISPOSED OF OFF SITE IN A MANNER THAT DOES NOT VIOLATE GROUNDWATER OR SURFACE WATER QUALITY STANDARDS.

B. SOIL AND CONSTRUCTION DEBRIS STOCKPILES
1. SOILS AND CONSTRUCTION DEBRIS, INCLUDING BROKEN CONCRETE AND ASPHALT PAVING, SHALL BE STOCKPILED WITHIN THE WORK SITE OR OFF SITE;
2. STOCKPILES SHALL BE COVERED WITH PLASTIC AND SECURED FROM BLOWING WIND;
3. PLASTIC SHALL BE A MINIMUM THICKNESS OF 6 MIL;
4. MATERIALS TO BE STOCKPILED ON PAVEMENT SHALL BE PLACED ON PLASTIC AND CONTAINED WITHIN A BERMED AREA;
5. CLEAN STORM WATER RUNOFF FROM THE PLASTIC COVERING SHALL BE DIRECTED AWAY FROM BARE SOIL USING PIPES, SANDBAGS, OR OTHER TEMPORARY DIVERSION DEVICES. CLEAN STORM WATER RUNOFF SHALL NOT BE DISCHARGED TO THE STORM DRAINAGE SYSTEM OR THE DUWAMISH WEST WATERWAY.

C. CONSTRUCTION ROADS, ENTRANCES, AND EXITS
1. BEFORE LEAVING PROJECT SITE, ALL TRUCKS AND EQUIPMENT SHALL BE INSPECTED FOR MUD AND DEBRIS;
2. ALL MUD AND DEBRIS SHALL BE REMOVED;
3. IF MUD OR DEBRIS IS TRACKED FROM THE SITE IT SHALL BE CLEANED UP IMMEDIATELY;
4. MUD AND DEBRIS SHALL BE REMOVED FROM PAVEMENT BY SWEEPING AND SHOVELING AND TRANSPORTED TO A CONTROLLED SEDIMENT STORAGE OR DISPOSAL AREA;
5. IF THE MUD AND DEBRIS ARE CONTAMINATED BY FUELS, GREASE, METALS OR OTHER POLLUTANTS, THEY SHALL BE DISPOSED OF IN ACCORDANCE WITH HAZARDOUS MATERIALS REQUIREMENTS;
6. USE OF WATER TO WASH CONCRETE OR ASPHALT PAVEMENT SHALL BE ALLOWED ONLY AFTER SEDIMENT HAS BEEN REMOVED BY SWEEPING AND SHOVELING;
7. WATER USED TO WASH PAVEMENT SHALL NOT DRAIN INTO THE SDS, IWS, OR ANY OTHER NATURAL OR CONSTRUCTED STORM WATER CONVEYANCE.

D. STORM DRAIN INLET PROTECTION
1. ALL CATCH BASINS WITHIN THE PROJECT LIMITS SHALL BE PROTECTED.

E. CONCRETE TRUCK AND EQUIPMENT WASHING
1. CONCRETE TRUCK SHUTS SHALL BE WASHED OUT OFF-SITE, UNLESS A LOCATION ON-SITE IS APPROVED BY THE ENGINEER.
2. CONCRETE REMAINING IN THE TRUCK AND NOT USED SHALL BE RETURNED TO THE ORIGINATING BATCH PLANT FOR RECYCLING;
3. CONCRETE PUMPS SHALL BE WASHED OUT OFF-SITE, UNLESS A LOCATION ON-SITE IS APPROVED BY THE ENGINEER.
4. CONCRETE REMAINING IN THE PUMP AND NOT USED SHALL BE BLOWN BACK INTO THE CONCRETE TRUCK AND RETURNED TO THE BATCH PLANT FOR RECYCLING;
5. HAND TOOLS INCLUDING, BUT NOT LIMITED TO, SCREEDS, SHOVELS, RAKES, FLOATS, AND TROWELS SHALL BE WASHED OFF-SITE, UNLESS A LOCATION ON-SITE IS APPROVED BY THE ENGINEER.

BID DOCUMENTS

MARK	REVISION DESCRIPTION	BY	APP.	DATE

BergerABAM
33301 9th Avenue South, Suite 300
Federal Way, Washington 98003-2600
(206) 431-2300 Fax: (206) 431-2250

SCOTT BRANLUND STATE OF WASHINGTON REGISTERED PROFESSIONAL ENGINEER
Scott Branlund 10/30/17

DRAWN BY MDB
DESIGN BY GDN
CHECK BY CSB
PROJ MGR CSB

PORT OF GRAYS HARBOR
28TH STREET BOAT LAUNCH IMPROVEMENTS
CONSTRUCTION PHASE II

UPLAND CIVIL SPECIFICATIONS - SHEET 2

DRAWING NO. G-4
PROJECT NO. FAWAT-12-145
DATE: 10/30/17
SHEET NO. 4 OF 48

Last Saved by: Garth.nelson on: Jul 27, 2017 3:00 PM File: Q:\FederalWay\2012\FAWAT-12-145\CAD\Dwgs\Phase_II\P21_G04.dwg

Copyright © BergerABAM. All Rights Reserved.

SECTION 32 11 24 - BASE COURSE

PART 1 - GENERAL

1.01 SUMMARY

A. EXTENT OF WORK: THE EXTENT OF "BASE COURSE" WORK IS INDICATED ON THE PLANS. THE WORK INCLUDES THE REQUIREMENTS FOR PRODUCING, TRANSPORTING, PLACING, SHAPING, AND COMPACTING BASE COURSE IN CONFORMANCE WITH THESE SPECIFICATIONS AND THE DIMENSIONS AND SECTIONS INDICATED ON THE PLANS OR WITHIN THE LINES AND GRADES ESTABLISHED BY THE ENGINEER.

1.02 REFERENCES

A. WASHINGTON STATE DEPARTMENT OF TRANSPORTATION (WSDOT) STANDARD SPECIFICATIONS FOR ROAD, BRIDGE, AND MUNICIPAL CONSTRUCTION, 2014 EDITION.

1.03 QUALITY ASSURANCE

A. INSPECTION AND TESTING: SAMPLING AND TESTING OF MATERIALS AND INSTALLATIONS SHALL BE PERFORMED BY THE CONTRACTOR AT NO COST TO THE PORT. TESTS, TESTING METHODS, AND RESULTS SHALL BE AS SPECIFIED IN THE PERTINENT SECTIONS OF THE WSDOT STANDARD SPECIFICATIONS.

1.04 SUBMITTALS

A. SIEVE ANALYSES FOR ALL MATERIALS SPECIFIED IN ACCORDANCE WITH SECTION 9-03.9(3) OF WSDOT STANDARD SPECIFICATIONS.

B. CERTIFIED TEST RESULTS OF ALL TESTING REQUIRED UNDER ARTICLE 3.03, FIELD QUALITY CONTROL.

PART 2 - PRODUCTS

2.01 AGGREGATES

A. BASE COURSE SHALL BE IN ACCORDANCE WITH THE REQUIREMENTS OF SECTION 9-03.9(3) OF WSDOT STANDARD SPECIFICATIONS.

PART 3 - EXECUTION

3.01 EQUIPMENT

A. ALL EQUIPMENT NECESSARY FOR THE SATISFACTORY INSTALLATION OF BASE COURSE SHALL MEET THE REQUIREMENTS OF SECTION 4-04.3(1) OF WSDOT STANDARD SPECIFICATIONS. THE ABOVE SPECIFICATION IS AMENDED TO PROVIDE FOR THE FOLLOWING:

B. EQUIPMENT GRADING MACHINES OR TRIMMERS WITH A SPIRIT LEVEL OR OTHER TYPE SLOPE INDICATOR THAT WILL CONTINUOUSLY INDICATE THE AVERAGE, TRANSVERSE SLOPE OF THE SCREED. BUBBLE OR INDICATOR MOVEMENT SHOULD BE NO LESS THAN 1/8 INCH FOR EACH 0.1% CHANGE IN TRANSVERSE SLOPE.

3.02 PLACEMENT OF BASE COURSE AGGREGATE

A. GENERAL: FOLLOW APPLICABLE REQUIREMENTS OF SECTION 4-04 OF WSDOT STANDARD SPECIFICATIONS.

B. SUBGRADE: PREPARE SUBGRADE AS REQUIRED IN SECTION 4-04.3(2) OF WSDOT STANDARD SPECIFICATIONS, AND OBTAIN APPROVAL OF THE ENGINEER BEFORE PLACING BASE COURSE MATERIAL.

C. MIXING: FOLLOW REQUIREMENTS OF SECTION 4-04.3(3) OF WSDOT STANDARD SPECIFICATIONS.

D. PLACING AND SPREADING: FOLLOW REQUIREMENTS OF SECTION 4-04.3(4) OF WSDOT STANDARD SPECIFICATIONS. THE MAXIMUM LIFT OF ANY COURSE OF MATERIAL SHALL NOT EXCEED 0.35 FEET.

E. SHAPING AND COMPACTION: FOLLOW REQUIREMENTS OF SECTION 4-04.3(5) OF WSDOT STANDARD SPECIFICATIONS. IMMEDIATELY FOLLOWING SPREADING AND SHAPING, EACH LAYER OF SURFACING SHALL BE COMPACTED TO AT LEAST 95% OF THE STANDARD DENSITY ACCORDING TO THE REQUIREMENTS IN SECTION 2-03.3(14)D OF THE WSDOT STANDARD SPECIFICATIONS.

F. MISCELLANEOUS REQUIREMENTS: FOLLOW REQUIREMENTS OF SECTION 4-04.3(7) OF WSDOT STANDARD SPECIFICATIONS.

G. WEATHER LIMITATIONS: FOLLOW REQUIREMENTS OF SECTION 4-04.3(8) OF WSDOT STANDARD SPECIFICATIONS.

H. HAULING: FOLLOW REQUIREMENTS OF SECTION 4-04.3(9) OF WSDOT STANDARD SPECIFICATIONS.

3.03 FIELD QUALITY CONTROL

A. CONTRACTOR SHALL PERFORM IN-PLACE COMPACTION & MOISTURE CONTENT TESTING IN ACCORDANCE WITH SECTION 4-04.3(5) AND SECTION 2-03.3(14)D OF THE WSDOT STANDARD SPECIFICATIONS.

SECTION 32 12 17 - HOT MIX ASPHALT PAVEMENT

PART 1 - GENERAL

1.01 REFERENCES

A. WASHINGTON STATE DEPARTMENT OF TRANSPORTATION (WSDOT) STANDARD SPECIFICATIONS, 2014 EDITION.

B. AMERICAN ASSOCIATION OF STATE HIGHWAY AND TRANSPORTATION OFFICIALS (ASSHTO)

1.02 SUBMITTALS

A. SUBMIT THE APPLICABLE DOCUMENTATION FOR REVIEW AND APPROVAL DEMONSTRATING COMPLIANCE WITH PROJECT REQUIREMENTS. SUBMIT MANUFACTURER'S CERTIFICATE OF COMPLIANCE AS APPLICABLE.

1. HMA AGGREGATE: GRADATION, SOURCE TEST RESULTS AS DEFINED IN SECTION 9_03.8 OF WSDOT STANDARD SPECIFICATIONS.

2. ASPHALT BINDER FOR HMA: TYPE AND PERFORMANCE GRADE FOR BINDER MATERIAL.

3. TACK COAT: TYPE AND GRADE OF ASPHALT.

4. HMA MIX DESIGN/JOB-MIX FORMULA (JMF): SHALL MEET THE REQUIREMENTS OF WSDOT STANDARD SPECIFICATIONS SECTION 5-04.3(7)A1. THE MIX DESIGN AGGREGATE STRUCTURE AND ASPHALT BINDER CONTENT SHALL BE DETERMINED IN ACCORDANCE WITH WSDOT STANDARD OPERATING PROCEDURE 732 AND MEET THE REQUIREMENTS OF SECTIONS 9-03.8(2) AND 9-03.8(6). SUBMIT CERTIFICATES OF SPECIFICATION COMPLIANCE FOR MATERIALS TO BE USED. SUBMIT CERTIFICATION AND SUPPORTING DOCUMENTATION THAT INDICATES MIX DESIGN HAS BEEN PREVIOUSLY APPROVED BY WSDOT FOR A ROADWAY PROJECT WITHIN THE PAST 12 MONTHS OF WHEN PAVING OPERATIONS WILL COMMENCE. CONTACTOR SHALL DETERMINE ANTI-STRIP REQUIREMENTS FOR THE HMA, IF ANY, IN ACCORDANCE WITH WSDOT TEST METHOD T718. RECYCLED MATERIALS ARE NOT ALLOWED FOR HMA ON THIS PROJECT. FORMULAS SHALL INDICATE PHYSICAL PROPERTIES OF THE MIXES AS SHOWN BY TESTS MADE BY A COMMERCIAL LABORATORY USING MATERIALS IDENTICAL TO THOSE TO BE PROVIDED ON THIS PROJECT. JMF FOR EACH MIXTURE SHALL BE IN EFFECT UNTIL MODIFIED IN WRITING BY THE CONTRACTOR AND APPROVED BY THE ENGINEER. PROVIDE A NEW JMF FOR EACH SOURCE CHANGE. SUBMITTAL SHALL INCLUDE ALL TEST DATA DEMONSTRATING THE DESIGN MEETS THE REQUIREMENTS OF SECTIONS 9-03.8(2) AND 9-03.8(6) OF WSDOT STANDARD SPECIFICATIONS. JMF SUBMITTAL SHALL INCLUDE THE FOLLOWING.

a. SOURCE AND PROPORTIONS, PERCENT BY WEIGHT, OF EACH INGREDIENT OF THE MIXTURE

b. CORRECT GRADATION, AND THE PERCENTAGES PASSING EACH SIZE SIEVE LISTED IN SECTION 9-03.8(6) OF WSDOT STANDARD SPECIFICATIONS

c. EFFECTIVE ASPHALT CONTENT AS PERCENT BY WEIGHT OF TOTAL MIX

d. PERCENT AIR VOIDS WITH TARGET AT 4.0% (SHALL BE BETWEEN 3.5 - 5.0 % IN LAB COMPACTED MIXTURES)

e. ASPHALT PERFORMANCE GRADE

1.03 QUALITY ASSURANCE

A. HMA TEST REQUIREMENTS SHALL COMPLY WITH THE WSDOT STANDARD SPECIFICATIONS SECTION 9-03.8(2). TEST METHODS FOR AGGREGATES SHALL COMPLY WITH THE WSDOT STANDARD SPECIFICATIONS SECTION 9-03.20.

B. INSPECTION AND TESTING: SAMPLING AND TESTING OF MATERIALS AND INSTALLATIONS SHALL BE PERFORMED BY THE CONTRACTOR AT NO COST TO THE PORT. TESTS, TESTING METHODS, AND RESULTS SHALL BE AS SPECIFIED IN THE PERTINENT SECTIONS OF THE WSDOT STANDARD SPECIFICATIONS, AND THIS SPECIFICATION.

C. MATERIALS AND WORK SHALL BE PERFORMED IN ACCORDANCE WITH AND SHALL MEET THE REQUIREMENTS OF THE PERTINENT SECTIONS OF THE WSDOT STANDARD SPECIFICATIONS, INCLUDING SECTION 5-04.

D. LEGALLY DISPOSE OF ALL WASTE MATERIAL PRODUCED AS A RESULT OF THE CONTRACTOR'S OPERATIONS. THE COST OF DISPOSAL FOR ALL WASTE WILL BE CONSIDERED INCIDENTAL TO THE COST OF CONSTRUCTION AND NO ADDITIONAL PAYMENT WILL BE MADE FOR PERFORMING THIS WORK.

E. HMA COURSES SHALL NOT BE CONSTRUCTED WHEN THE UNDERLYING COURSE CONTAINS FREE SURFACE WATER. UNLESS OTHERWISE DIRECTED, ASPHALT COURSES SHALL NOT BE CONSTRUCTED WHEN THE AVERAGE SURFACE TEMPERATURES ARE LESS THAN THAT SPECIFIED IN THE TABLE INCLUDED IN SECTION 5-04.3(16) IN THE WSDOT STANDARD SPECIFICATIONS, OR AS RECOMMENDED BY THE BINDER MANUFACTURER.

F. TRUCK TICKETS FOR HMA SHALL CLEARLY STATE MIX NUMBER OR OTHER INFORMATION THAT CORRESPONDS DIRECTLY WITH SUBMITTAL DOCUMENTATION. IF TRUCK TICKET CANNOT BE RELATED BACK TO SUBMITTAL INFORMATION, ASPHALT WILL NOT BE ALLOWED TO BE PLACED AND CONTRACTOR WILL RETURN MATERIAL AT HIS OWN EXPENSE - NO EXCEPTIONS.

1.04 ENVIRONMENTAL CONDITIONS

A. WEATHER LIMITATIONS SHALL BE IN ACCORDANCE WITH WSDOT SECTION 5-04.3(16). PLACE HMA ONLY DURING DRY WEATHER AND ON DRY SURFACES - NO EXCEPTION. HMA PLACED ON WET SURFACES AND/OR DURING RAINFALL ARE SUBJECT TO REMOVAL AND REPLACEMENT AT CONTRACTOR'S EXPENSE.

1.05 CONSTRUCTION EQUIPMENT

A. CALIBRATED EQUIPMENT, SUCH AS SCALES, BATCHING EQUIPMENT, SPREADERS AND SIMILAR EQUIPMENT, SHALL HAVE BEEN RECALIBRATED BY A CALIBRATION LABORATORY WITHIN 12 MONTHS OF COMMENCING WORK. EQUIPMENT SHALL ALSO BE IN ACCORDANCE WITH WSDOT SECTION 1-05.9.

1. MIXING PLANT

a. MIXING PLANT SHALL BE IN ACCORDANCE WITH WSDOT SECTION 5-04.3(1).

B. PAVING EQUIPMENT

1. HAULING EQUIPMENT

a. HAULING EQUIPMENT SHALL BE IN ACCORDANCE WITH WSDOT SECTION 5-04.3(2).

2. HOT MIX ASPHALT (HMA) PAVERS

a. PAVERS SHALL BE IN ACCORDANCE WITH WSDOT SECTION 5-04.3(3).

C. ROLLERS

a. ROLLERS SHALL BE IN ACCORDANCE WITH WSDOT SECTION 5-04.3(4).

PART 2 - PRODUCTS

2.01 GENERAL

A. MATERIALS SHALL BE IN ACCORDANCE WITH WSDOT SECTION 5-04.2.

2.02 TACK COAT

A. TACK COAT SHALL BE EMULSIFIED ASPHALT, CSS-1, IN ACCORDANCE WITH WSDOT SECTION 9-02.1(6).

2.03 AGGREGATES

A. GENERAL REQUIREMENTS

1. GENERAL REQUIREMENTS SHALL BE IN ACCORDANCE WITH WSDOT SECTION 9-03.8(1). AGGREGATES SHALL BE HMA CLASS 1/2 INCH.

B. TEST REQUIREMENTS

1. AGGREGATES FOR HMA SHALL BE IN ACCORDANCE WITH TEST REQUIREMENTS IN WSDOT SECTION 9-03.8(2).

C. GRADING

1. GRADING REQUIREMENTS SHALL BE IN ACCORDANCE WITH WSDOT SECTION 9-03.8(3).

D. BLENDING SAND

1. BLENDING SAND SHALL BE IN ACCORDANCE WITH WSDOT SECTION 9-03.8(4).

E. MINERAL FILLER

1. MINERAL FILLER, WHEN USED, SHALL BE IN ACCORDANCE WITH WSDOT SECTION 9-03.8(5).

F. HMA PROPORTIONS OF MINERALS

1. PROPORTIONS OF MATERIALS SHALL BE IN ACCORDANCE WITH WSDOT SECTION 9-03.8(6).

G. HMA TOLERANCES AND ADJUSTMENTS

1. JOB MIX TOLERANCES AND ADJUSTMENTS SHALL BE IN ACCORDANCE WITH WSDOT SECTION 9-03.8(7).

2.04 ASPHALT CEMENT BINDER

A. ASPHALT BINDER SHALL CONFORM TO WSDOT SECTIONS 9-2.1(4) AND AASHTO MP 1A PERFORMANCE GRADE (PG) 64-22. TEST DATA INDICATING GRADE CERTIFICATION SHALL BE PROVIDED BY THE SUPPLIER AT THE TIME OF DELIVERY OF EACH LOAD TO THE MIX PLANT. COPIES OF THESE CERTIFICATIONS SHALL BE SUBMITTED TO THE ENGINEER. THE SUPPLIER IS DEFINED AS THE LAST SOURCE OF ANY MODIFICATION TO THE BINDER.

2.05 HMA PAVEMENT CLASS

A. HMA PAVEMENT SHALL MEET ALL THE APPLICABLE WSDOT REQUIREMENTS FOR HMA CLASS 1/2 INCH. THE HMA SHALL BE DESIGNED FOR GREATER THAN 30M ESALS, MIN 100 GYRATIONS, IN ACCORDANCE WITH SECTION 9-03.8(2).

2.06 MIX DESIGN

A. THE MIX DESIGN WILL BE THE INITIAL JMF. THE ASPHALT MIX SHALL BE IN ACCORDANCE WITH WSDOT SECTION 5-04.3(7)A.

1. ADJUSTMENTS TO JMF

a. THE JMF FOR EACH MIXTURE SHALL BE IN EFFECT UNTIL A NEW FORMULA IS APPROVED IN WRITING BY THE ENGINEER. SHOULD A CHANGE IN SOURCES OF ANY MATERIALS BE MADE, A NEW MIX DESIGN SHALL BE PERFORMED AND A NEW JMF APPROVED BEFORE THE NEW MATERIAL IS USED. THE CONTRACTOR WILL BE ALLOWED TO ADJUST THE JMF WITHIN THE LIMITS SPECIFIED BELOW TO OPTIMIZE MIX VOLUMETRIC PROPERTIES. ADJUSTMENTS TO THE JMF SHALL BE LIMITED TO PLUS OR MINUS 3 PERCENT ON THE 1/2 INCH, NO. 4, AND NO. 8 SIEVES; PLUS OR MINUS 1.0 PERCENT ON THE NO. 200 SIEVE; AND PLUS OR MINUS 0.40 PERCENT BINDER CONTENT. IF ADJUSTMENTS ARE NEEDED THAT EXCEED THESE LIMITS, A NEW MIX DESIGN SHALL BE DEVELOPED.

2.07 PROPORTIONS OF HMA MATERIALS

A. THE MATERIALS OF WHICH HMA PAVEMENT IS COMPOSED SHALL BE OF SUCH SIZES, GRADINGS, AND QUANTITIES THAT, WHEN PROPORTIONED AND MIXED TOGETHER, THEY WILL PRODUCE A WELL-GRADED MIXTURE WITHIN THE REQUIREMENTS LISTED IN THE WSDOT STANDARD SPECIFICATIONS

B. THE ACTUAL PROPORTIONS OF THE SEVERAL COMPONENTS TO BE USED IN THE PRODUCTION OF THE ASPHALT CONCRETE MIXTURE SHALL BE WITHIN THE WSDOT SPECIFIED LIMITS TO PROVIDE A PAVEMENT HAVING SURFACE TEXTURE, AIR VOIDS, VOIDS IN MINERAL AGGREGATE (VMA), AND VOIDS FILLED WITH ASPHALT (VFA) VALUES SATISFACTORY TO THE ENGINEER. THE PROPORTIONS SO FIXED SHALL BE CHANGED ONLY BY HIS ORDER.

C. SELECTION OF ASPHALT CONTENT SHALL ACHIEVE AN AIR VOID CONTENT BETWEEN 3.5 TO 5 PERCENT IN LABORATORY COMPACTED MIXTURES (TARGET IS 4%), WHICH IS PURPOSELY A MORE RESTRICTIVE RANGE THAN ALLOWED BY WSDOT. ASPHALT CONTENT SHOULD NOT BE ARBITRARILY INCREASED IN CONSTRUCTION TO FACILITATE COMPACTION, MINIMIZE SEGREGATION, OR FOR ANY OTHER REASON. DO NOT BEGIN PRODUCTION UNTIL THE ENGINEER HAS APPROVED MIX DESIGNS.

2.08 JOINT SEALER

A. JOINT SEALER SHALL BE IN ACCORDANCE WITH SECTION 9-04.2(1).

PART 3 - EXECUTION

3.01 GENERAL

A. HMA CONSTRUCTION REQUIREMENTS SHALL BE IN ACCORDANCE WITH WSDOT SECTION 5-04.3.

3.02 SURFACE PREPARATION

A. GENERAL: SURFACE PREPARATION SHALL BE IN ACCORDANCE WITH WSDOT STANDARD SPECIFICATIONS SECTION 5-04.3(5)A.

B. SOIL RESIDUAL HERBICIDE: APPLY SOIL RESIDUAL HERBICIDE IN UPLAND AREAS TO BE PAVED IN ACCORDANCE WITH WSDOT SECTION 5-04.3(5)D.

C. CLEAN PAVEMENT SURFACES IN ACCORDANCE WITH WSDOT STANDARD SPECIFICATIONS SECTION 5-04.3(5)A PRIOR TO APPLYING TACK COAT, PLACING HMA OVERLAY, ETC.

D. PRIOR TO PLACING HMA OVERLAY, APPLY TACK COAT OVER ASPHALT PAVEMENT AND/OR STRUCTURE SURFACES AS DIRECTED BY THE ENGINEER. THE APPLICATION RATE FOR TACK COAT WILL BE DETERMINED BY THE ENGINEER BUT SHALL NOT EXCEED 0.15 GALLON PER SQUARE YARD. AREAS TO RECEIVE TACK COAT MUST BE APPROVED BY THE ENGINEER PRIOR TO APPLICATION.

E. APPLY JOINT SEALER TO THE EDGES OF NEW PAVING JOINTS, UTILITY STRUCTURES, ETC., AS DIRECTED BY THE ENGINEER.

F. PAVEMENT SAW CUTTING SHALL BE DONE AS INDICATED ON THE PLANS AND AS DIRECTED BY THE ENGINEER.

3.03 PLACING HMA PAVEMENT

A. SPREADING AND FINISHING:

1. SPREADING AND FINISHING OF HMA SHALL BE IN ACCORDANCE WITH SECTION 5-04.3(9) OF WSDOT STANDARD SPECIFICATIONS.

B. COMPACTION OF MIXTURE:

1. COMPACTION SHALL BE IN ACCORDANCE WITH SECTION 5-04.3(10) OF WSDOT STANDARD SPECIFICATIONS. .

C. JOINTS:

1. JOINTS SHALL BE IN ACCORDANCE WITH SECTION 5-04.3(12) OF WSDOT STANDARD SPECIFICATIONS. VERTICAL CONTACT SURFACES OF PREVIOUSLY CONSTRUCTED SECTIONS OR EXISTING PAVEMENT SHALL BE PAINTED WITH A TACK COAT JUST BEFORE PLACING FRESH HMA.

D. LINE, GRADE, AND THICKNESS:

1. IN GENERAL, THE SLOPE OF THE FINISHED GRADE SHALL MATCH EXISTING CONDITIONS WHERE HMA OVERLAY IS TO BE PLACED, WITH THE EXCEPTION OF TRANSITION AREAS WHERE RAILROAD TRACK CROSSINGS ARE LOCATED AND AT THE NORTH AND SOUTH ENDS OF CONSTRUCTION. TRANSITION AREAS SHALL BE GRADUALLY SLOPED TO FINISH GRADE AS SHOWN ON DRAWINGS SUCH THAT OVERLAY MATCHES AND IS FLUSH WITH EXISTING GRADE AT PAVING BOUNDARIES.

E. HMA:

1. MIX, HANDLE, BATCH, HAUL, PLACE, ROLL, AND COMPACT HMA PAVEMENT IN ACCORDANCE WITH THE APPLICABLE SECTIONS OF THE WSDOT STANDARD SPECIFICATIONS. PLACE THE MATERIAL TO THE DIMENSIONS INDICATED ON THE PLANS AND AS DIRECTED BY THE ENGINEER. MINIMUM COMPACTED LAYER THICKNESS SHALL BE 1.80 INCHES. THE MAXIMUM COMPACTED LAYER THICKNESS WHEN PLACED AS THE FINAL WEARING COURSE SHALL BE 3.6 INCHES. THE MAXIMUM COMPACTED LAYER THICKNESS WHEN PLACED AS ONE OF THE BASE LAYERS SHALL BE 4.2 INCHES. WHERE 6 INCHES TOTAL THICKNESS IS REQUIRED, PLACE (2) TWO 3 INCH COMPACTED LAYERS.

3.04 FIELD QUALITY CONTROL

A. CONTRACTOR SAMPLING OF PAVEMENT AND MIXTURE: TAKE FIELD SAMPLES FOR THICKNESS AND DENSITY OF THE COMPLETED PAVEMENTS. FURNISH TOOLS, LABOR, AND MATERIAL FOR SAMPLES AND SATISFACTORY REPLACEMENT OF PAVEMENT. TAKE SAMPLES AND TESTS AT NOT LESS THAN FREQUENCY SPECIFIED HEREINAFTER AND AT THE BEGINNING OF PLANT OPERATIONS, FOR EACH DAY'S WORK AS A MINIMUM, EACH CHANGE IN THE MIX OR EQUIPMENT, AND AS DIRECTED BY THE ENGINEER.

B. TESTING: PERFORM THE FOLLOWING TESTS:

1. COMPACTION/DENSITY: WSDOT SECTIONS 5-04.3(8)A AND 5-04.3(10)A AND B.

2. THICKNESS: DETERMINE THICKNESS OF CORE SAMPLES TAKEN FOR THE FIELD DENSITY TEST. SAMPLES SHALL BE TAKEN A MINIMUM OF ONE EVERY 500 SQUARE FEET OF PAVEMENT AREA OR AS DIRECTED BY ENGINEER. THE MAXIMUM ALLOWABLE DEFICIENCY AT ANY POINT SHALL NOT BE MORE THAN 1/4 INCH DIFFERENT THAN THE THICKNESS FOR THE INDICATED COURSE. AVERAGE THICKNESS OF COURSE OR OF COMBINED COURSES SHALL BE NOT LESS THAN THE INDICATED THICKNESS. WHERE A DEFICIENCY EXCEEDS THE SPECIFIED TOLERANCES, CORRECT EACH SUCH REPRESENTATIVE AREA OR AREAS BY REMOVING AND REPLACING THE DEFICIENT PAVEMENT. SKIN PATCHING AS A METHOD OF CORRECTING THIN/LOW AREAS IS PROHIBITED. ADDITIONAL SAMPLES SHALL BE TAKEN TO ESTABLISH THE EXTENT OF PAVEMENT HAVING DEFICIENT THICKNESS TO THE SATISFACTION OF THE ENGINEER, AND ADDITIONAL SAMPLES SHALL BE DONE AT NO ADDITIONAL COST TO THE PORT.

3. SMOOTHNESS: SURFACE SMOOTHNESS SHALL BE IN ACCORDANCE WITH SECTION 5-04.3(13) OF WSDOT STANDARD SPECIFICATIONS.

4. FINISH GRADES: FINISH GRADES OF EACH COURSE PLACED SHALL NOT VARY FROM THE PREVIOUS EXISTING GRADE PLUS HMA OVERLAY THICKNESS BY MORE THAN 1/4 INCH. FINISHED SURFACE SHALL BE TESTED TO ENSURE PROPER SURFACE RUNOFF WILL OCCUR WITHOUT PONDING TO THE SATISFACTION OF THE ENGINEER. WHERE UNACCEPTABLE LOW SPOTS ARE IDENTIFIED, CONTRACTOR SHALL REMOVE THE ASPHALT SECTION IN LOW AREA AND REPLACE WITH ADJUSTED GRADES TO ENCOURAGE POSITIVE DRAINAGE. PONDING AREAS CAUSED BY DEFICIENT PAVEMENT THICKNESS SHALL BE RECONSTRUCTED AT NO ADDITIONAL COST.

5. FINISH SURFACE TEXTURE OF WEARING COURSE: VISUALLY CHECK FINAL SURFACE TEXTURE FOR UNIFORMITY AND REASONABLE COMPACTNESS AND TIGHTNESS. FINAL WEARING COURSE WITH A SURFACE TEXTURE HAVING UNDESIRABLE IRREGULARITIES, SUCH AS SEGREGATION, CAVITIES, PULLS OR STREAKS, INDENTATIONS, RIPPLES, OR LACK OF UNIFORMITY SHALL BE REMOVED AND REPLACED.

C. DO NOT ALLOW VEHICULAR TRAFFIC OF ANY TYPE ON PAVEMENT FOR A MINIMUM OF 48 HOURS OR UNTIL SURFACE TEMPERATURE HAS COOLED TO AT LEAST 120 DEGREES F, WHICHEVER IS LONGEST. MEASURE SURFACE TEMPERATURE BY APPROVED THERMOMETERS OR OTHER SATISFACTORY METHODS.

BID DOCUMENTS

MARK	REVISION DESCRIPTION	BY	APP.	DATE

BergerABAM
33301 9th Avenue South, Suite 300
Federal Way, Washington 98003-2600
(206) 431-2300 Fax: (206) 431-2250

SCOTT BRANLUND STATE OF WASHINGTON REGISTERED PROFESSIONAL ENGINEER

DRAWN BY MDB
DESIGN BY GDN
CHECK BY CSB
PROJ MGR CSB

PORT OF GRAYS HARBOR
28TH STREET BOAT LAUNCH IMPROVEMENTS
CONSTRUCTION PHASE II

UPLAND CIVIL SPECIFICATIONS - SHEET 3

DRAWING NO. G-5
PROJECT NO. FAWAT-12-145
DATE: 10/30/17
SHEET NO. 5 OF 48

Last Saved by: Garth.nelson on: Jul 27, 2017 3:00 PM File: Q:\FederalWay\2012\FAWAT-12-145\CADD\Dwgs\Phase_II\P21_G05.dwg

Copyright © BergerABAM. All Rights Reserved.

SECTION 33 10 00 - WATER

PART 1 - GENERAL

1.01 DESCRIPTION OF WORK

A. THE EXTENT OF WORK IS INDICATED ON THE DRAWINGS. WORK INCLUDES THE REQUIREMENTS FOR PROVIDING THE UPLANDS PORTION OF THE WATER SYSTEM, INCLUDING TRENCH EXCAVATION, INSTALLATION OF NEW PIPING, PLACEMENT AND COMPACTION OF BEDDING MATERIAL, BACKFILL, INSTALLATION OF VALVES, BOLLARDS TO PROTECT EXISTING HYDRANTS, ETC., ALL IN CONFORMANCE WITH THESE SPECIFICATIONS AND THE DIMENSIONS AND SECTIONS INDICATED ON THE DRAWINGS OR WITHIN THE LINES AND GRADES ESTABLISHED BY THE ENGINEER.

1.02 QUALITY ASSURANCE

A. QUALIFICATION OF WORKERS: EMPLOY THE SERVICES OF A QUALIFIED UTILITY CONTRACTOR, WHO WILL BE THOROUGHLY FAMILIAR WITH THE TYPE OF MATERIALS BEING INSTALLED AND THE BEST METHODS FOR THEIR INSTALLATION, AND WHO SHALL DIRECT ALL WORK PERFORMED UNDER THIS SECTION.

B. CODES AND STANDARDS: COMPLY WITH THE APPLICABLE PROVISIONS OF ALL PERTINENT CODES AND REGULATIONS. REFERENCES MADE HEREIN FOR MANUFACTURED MATERIALS, SUCH AS PIPE, FITTINGS, VALVES; REFER TO DESIGNATIONS FOR AMERICAN WATER WORKS ASSOCIATION (AWWA), AMERICAN NATIONAL STANDARDS INSTITUTE (ANSI) OR TO STANDARD SPECIFICATIONS FOR ROAD, BRIDGE, AND MUNICIPAL CONSTRUCTION, M41-10, 2014 EDITION, BY WASHINGTON STATE DEPARTMENT OF TRANSPORTATION (WSDOT STANDARD SPECIFICATIONS).

C. LOCAL AUTHORITY - WATER PURVEYOR: THE CONTRACTOR SHALL COORDINATE WITH AND COMPLY WITH THE APPLICABLE PROVISIONS REQUIRED BY THE WATER PURVEYOR ASSOCIATED WITH TIE-IN TO THE EXISTING WATER MAIN, NOTIFICATIONS, TESTING, FLUSHING, DISINFECTION, INSTALLATION, INSPECTION AND MATERIALS USED.

D. ALL WATER SYSTEM COMPONENTS UNLESS NOTED OTHERWISE SHALL BE RATED FOR A WORKING PRESSURE OF AT LEAST 125 PSI AND A TESTING PRESSURE OF 225 PSI, AND BE APPROVED FOR POTABLE USE BY NATIONAL SANITATION FOUNDATION (NSF).

1.03 SUBMITTALS

A. PIPING, FITTINGS, VALVES, ACCESSORIES

1. MANUFACTURER'S CATALOG CUTS AND SHOP DRAWINGS TO DEMONSTRATE THAT ALL ITEMS CONFORM TO THE SPECIFICATIONS FOR THE FOLLOWING:

a) PIPE, FITTINGS AND ACCESSORIES

b) VALVES AND VALVE BOXES

c) WATER METER - AS REQUIRED BY WATER PURVEYOR

B. TESTING AND INSPECTION

1. SUBMIT TESTING AND INSPECTION PROCEDURES, INCLUDING INSPECTION REQUIREMENTS AND TESTING REQUIREMENTS TO BE PERFORMED. PROCEDURES SHALL INCLUDE PRESSURE TESTING, FLUSHING, AND DISINFECTION (CHLORINATION AND DECHLORINATION).

1.04 PRODUCT HANDLING

A. HANDLE PIPE TO PREVENT DAMAGE TO THE PIPE, PIPE LINING, OR COATING. DAMAGE TO THE PIPE, PIPE LINING, OR COATING, IF ANY, SHALL BE REPAIRED AS DIRECTED BY THE ENGINEER OR REPLACED AT THE CONTRACTOR'S EXPENSE.

B. AT TIMES WHEN PIPE LAYING IS NOT IN PROGRESS, CLOSE THE OPEN ENDS OF THE PIPE WITH A WATERTIGHT PLUG OR BY OTHER MEANS APPROVED BY THE ENGINEER TO ENSURE ABSOLUTE CLEANLINESS INSIDE THE PIPE.

PART 2 - PRODUCTS

2.01 PIPE, FITTINGS, AND APPURTENANCES

A. GENERAL: MATERIALS SHALL BE IN ACCORDANCE WITH THE APPLICABLE REFERENCES WITHIN WSDOT STANDARD SPECIFICATIONS, SECTION 7-09.2.

B. BURIED UPLAND DUCTILE IRON PIPE & FITTINGS

1. DUCTILE IRON PIPE (DIP) AND FITTINGS SHALL BE CLASS 52. PIPE SHALL BE IN ACCORDANCE WITH WSDOT STANDARD SPECIFICATIONS SECTION 9-30.1(1). ALL PIPE SHALL BE NSF APPROVED FOR POTABLE USE.

2. PIPE SHALL HAVE AN ASPHALTIC EXTERIOR COATING AND A CEMENT MORTAR LINING IN ACCORDANCE WITH ANSI/AWWA C104. DUCTILE IRON PIPE SHALL BE ENCASED WITH POLYETHYLENE (PE) ENCASEMENT (POLY-WRAP) IN ACCORDANCE WITH AWWA C105, TUBE TYPE WITH 2-INCH WIDE ADHESIVE TAPE.

3. DUCTILE IRON FITTINGS SHALL BE IN ACCORDANCE WITH WSDOT STANDARD SPECIFICATIONS, SECTION 9-30.2(1). ALL FITTINGS SHALL BE NSF APPROVED FOR POTABLE USE.

C. TYPE K COPPER PIPE FOR BUILDING SERVICE LATERAL PIPING

1. COPPER PIPE SHALL BE ANNEALED, SEAMLESS, AND CONFORM TO THE REQUIREMENTS OF ASTM B88, TYPE K RATING FOR BELOW GROUND PIPE, AND SHALL MEET WSDOT SECTION 9-30.6(3). FITTINGS SHALL BE IN ACCORDANCE WITH WSDOT SECTION 9-30.6(4)A.

2. FITTINGS SHALL BE WROUGHT COPPER, CONFORMING TO ASTM B 75 FOR MATERIALS AND ANSI B16.22 FOR DIMENSIONS, OR CAST BRONZE, CONFORMING WITH ASTM B 62 FOR MATERIALS AND ANSI B16.18 FOR DIMENSIONS. SOLDER JOINTS WITH 95/5 SOLDER AND NAPP GAS.

2.02 VALVES

A. GATE VALVES 3 INCHES AND LARGER FOR DUCTILE IRON PIPING

1. VALVE TYPE: RESILIENT SEAT VALVES, ANSI/AWWA C509, WSDOT STANDARD SPECIFICATIONS SECTION 9-30.3(1).

2. RATING: 200 PSI

3. OPENING: COUNTER CLOCKWISE

4. BODY: DUCTILE IRON EPOXY COATED

5. ENDS: FLANGED, MECHANICAL JOINT

6. STEM: NON-RISING HIGH STRENGTH BRONZE

7. STEM SEALS: O-RING

8. BODY-BONNET CONNECTIONS: BOLTED WITH CORROSION-RESISTANT MATERIAL.

9. MANUAL OPERATOR: 2-INCH SQUARE OPERATING NUT FOR BURIED VALVE BOX INSTALLATION WITH VALVE BOX

10. MANUFACTURER: M&H VALVE MODEL C509/C515, CLOW VALVE MODEL 2639/2640, AMERICAN FLOW CONTROL SERIES 2500, OR APPROVED EQUAL.

B. BALL VALVES:

1. SIZE: TWO (2) INCHES AND SMALLER

2. MATERIAL: BRONZE

3. RATING: 600 PSI W.O.G.

4. BALL AND STEM: 316 STAINLESS STEEL

5. SEATS: REINFORCED TEFLON

6. CONNECTION: THREADED

7. MANUFACTURER: WATTS, SERIES FBV-3, OR APPROVED EQUAL.

2.03 VALVE BOX AND COVERS

A. VALVE BOX SHALL BE IN ACCORDANCE WITH WSDOT SECTION 9-30.3(4). FRAME AND LID SHALL BE TESTED FOR ACCURACY OF FIT. CASTINGS AND EXTENSIONS SHALL BE HOT-DIPPED IN ASPHALTIC VARNISH ROYSTON ROSKOTE #612XM. MANUFACTURER: OLYMPIC FOUNDRY, OR APPROVED EQUAL.

PART 3 - EXECUTION

3.01 TRENCHING, BEDDING AND BACKFILL

A. ALL TRENCHING / EARTHWORK RELATED TO WATER PIPING SHALL CONFORM TO THE REQUIREMENTS OF SECTION 31 00 00 - EARTHWORK AND NOTES ON THE DRAWINGS. PROVIDE SHORING AS NECESSARY TO SUPPORT EXISTING FEATURES TO REMAIN IN PLACE.

B. BEDDING MATERIAL FOR WATER PIPE SHALL BE WASHED SAND.

a. IN THE EVENT THAT WATER IS ENCOUNTERED OR ACCUMULATES IN THE TRENCH, IT SHALL BE REMOVED DURING THE PIPE-LAYING OPERATION AND BE MAINTAINED IN A WATER-FREE CONDITION UNTIL THE ENDS OF THE PIPE ARE SEALED AND PROVISIONS ARE MADE TO PREVENT FLOATING OF THE PIPE. AT NO TIME ALLOW TRENCH WATER TO ENTER THE PIPE.

3.02 COORDINATION WITH OTHERS

A. PRIOR TO STARTING WORK COORDINATE SHUT DOWNS, DEMOLITION, AND REOPENING WATER SUPPLY WITH THE PORT AND WATER PURVEYOR.

3.03 HANDLING THE PIPE

A. DURING INSTALLATION, HANDLE THE PIPE AS SPECIFIED HEREIN. PIPE THAT HAS BECOME DAMAGED OR CONTAMINATED WITH DEBRIS SHALL BE REMOVED FROM THE TRENCH, CLEANED, AND REPAIRED AS REQUIRED AND RE-LAID.

3.04 LAYING PIPE

A. GENERAL: CONSTRUCTION SHALL CONFORM TO MANUFACTURER INSTRUCTIONS AND REQUIREMENTS IN ACCORDANCE WITH WSDOT SECTION 7-09.3. DUCTILE IRON WATER LINES SHALL BE BURIED WITH A MINIMUM COVER OF 4 FEET. COPPER WATER LINES SHALL BE BURIED WITH A MINIMUM COVER OF 3 FEET.

B. RUBBER GASKET OF JOINT ON DUCTILE IRON PIPE:

1. CLEANING AND ASSEMBLING JOINT: CLEAN THE INSIDE OF THE BELL TO REMOVE OIL, GRIT, TAR (OTHER THAN STANDARD COATING) AND OTHER FOREIGN MATERIAL FROM THE JOINT. FLEX THE CIRCULAR RUBBER GASKET INWARD AND INSERT IN THE GASKET SEAT PROVIDED IN THE SOCKET, THEN RELEASE WITH THE GASKET FITTING OVER THE BEAD IN THE GASKET SEAT. APPLY A THIN FILM OF GASKET LUBRICANT TO THE INSIDE SURFACE OF THE GASKET. GASKET LUBRICANT SHALL BE AS SUPPLIED BY THE PIPE MANUFACTURER AND APPROVED BY THE ENGINEER.

2. CLEAN THE SPIGOT END OF THE PIPE AND ENTER INTO THE RUBBER GASKET IN THE SOCKET, USING CARE TO KEEP THE JOINT FROM CONTACTING THE GROUND. COMPLETE THE JOINT BY FORCING THE PLAIN END TO THE BOTTOM OF THE SOCKET USING A DEVICE APPROVED BY THE ENGINEER. PIPE THAT IS NOT FURNISHED WITH A DEPTH MARK SHALL BE MARKED BEFORE ASSEMBLY TO ENSURE THAT THE SPIGOT END IS INSERTED TO THE FULL DEPTH OF THE JOINT.

3.05 VALVE INSTALLATION

A. GATE VALVES: INSPECT ALL GATE VALVES UPON DELIVERY IN THE FIELD TO ENSURE PROPER WORKING ORDER BEFORE INSTALLATION. SET AND JOINT TO THE PIPE IN THE MANNER SET FORTH IN THE AWWA STANDARDS FOR THE TYPE OF CONNECTION ENDS FURNISHED. INSPECT THE VALVES CAREFULLY FOR DAMAGE TO THE OUTER PROTECTIVE COATINGS. WHERE THE COATING HAS BEEN RUPTURED OR SCRAPED OFF, CLEAN THE DAMAGED AREA THOROUGHLY TO EXPOSE THE IRON BASE INSTALLATION, AND RECOAT THE CLEANED AREA WITH TWO OR MORE FIELD COATS OF QUIGLEY TRIPLE A-1 0, TRIPLE A-20, OR APPROVED EQUAL.

B. INSTALL VALVES IN THE POSITIONS SHOWN ON THE DRAWINGS AND PROVIDE WITH A VALVE BOX SO ARRANGED THAT NO LOAD OR SHOCK WILL BE TRANSMITTED TO THE VALVE. CENTER THE BOX OVER THE OPERATING NUT, AND SET THE BOX COVER FLUSH WITH THE FINISHED SURFACE.

C. AFTER INSTALLATION, ALL VALVES SHALL BE SUBJECTED TO THE FIELD TEST FOR PIPING. IF DEFECTS IN DESIGN, MATERIALS, OR WORKMANSHIP APPEAR DURING THESE TESTS, CORRECT SUCH DEFECTS WITH THE LEAST POSSIBLE DELAY AS DIRECTED BY THE ENGINEER.

D. VALVE BOXES SHALL BE POSITIONED DURING BACKFILL TO BE IN A PLUMB ALIGNMENT. VALVE BOX SHALL NOT REST DIRECTLY ON THE BODY OF THE VALVE, OR THE WATER MAIN. SET THE UPPER CASTING FLUSH WITH FINISH PAVEMENT AND ALIGN TO MATCH GRADE.

3.06 THRUST BLOCKS FOR BURIED DUCTILE IRON PIPE

A. CONTRACTOR SHALL INSTALL CONCRETE THRUST BLOCKS AT ALL FITTINGS, SUCH AS BENDS, TEES, AND CAPS/PLUGS. THRUST BLOCKS SHALL BE CONSTRUCTED IN ACCORDANCE WITH THE NOTES ON THE DRAWINGS, WSDOT STANDARD PLAN B-90.40-00, AND WSDOT STANDARD SPECIFICATIONS SECTION 7-09.3(21). ASSUME SOIL IN EXCAVATION HAS AN ALLOWABLE BEARING PRESSURE OF 2,000 PSF FOR DESIGN OF THRUST BLOCKS UNLESS MATERIAL APPEARS SOFT, MUCKY, ETC.

3.07 COPPER PIPE

A. FOLLOW INDUSTRY STANDARDS AND MANUFACTURER'S RECOMMENDATIONS FOR INSTALLATION OF BURIED COPPER PIPING. FOLLOW MANUFACTURER'S INSTRUCTIONS ON HANDLING, TRANSPORTING, AND STORAGE.

3.08 FIELD TESTS

A. TEST ALL PIPING AND APPURTENANCES IN ACCORDANCE WITH THE REQUIREMENTS OF WSDOT STANDARD SPECIFICATIONS SECTION 7-09.3 (23).

B. TEST COPPER PIPE IN ACCORDANCE WITH PIPE AND FITTING MANUFACTURER'S REQUIREMENTS.

3.09 FLUSHING & DISINFECTION OF POTABLE WATER LINES

A. BEFORE BEING PLACED IN SERVICE, FLUSH AND DISINFECT ALL NEW POTABLE WATER LINES IN ACCORDANCE WITH THE REQUIREMENTS OF WSDOT STANDARD SPECIFICATIONS SECTION 7-09.3(24) AND 7-09.3(24)A. DISPOSE OF TEST WATER IN ACCORDANCE WITH APPLICABLE REGULATIONS.

SECTION 33 30 30 - SANITARY SEWER

PART 1 - GENERAL

1.01 REFERENCES

A. THE PUBLICATIONS LISTED BELOW FORM A PART OF THIS SPECIFICATION SECTION TO THE EXTENT REFERENCED. THE PUBLICATIONS ARE REFERRED TO WITHIN THE TEXT BY THE BASIC DESIGNATION ONLY.

1. WASHINGTON STATE DEPARTMENT OF TRANSPORTATION (WSDOT) (2014) ROAD, BRIDGE, AND MUNICIPAL CONSTRUCTION

1.02 SYSTEM DESCRIPTION

A. SANITARY SEWER GRAVITY PIPELINE - UPLANDS

1. PROVIDE NEW UPLANDS SANITARY SEWER GRAVITY PIPING FROM RESTROOM FACILITY TO EXISTING MANHOLE. INSTALL CLEANOUT JUST OUTSIDE THE RESTROOM STRUCTURE AND A MANHOLE WHERE A CHANGE IN HORIZONTAL ALIGNMENT IS REQUIRED.

1.03 SUBMITTALS

A. SUBMIT PRODUCT INFORMATION ON PIPELINE, CLEANOUT, AND MANHOLE MATERIALS, INCLUDING MANUFACTURER'S STANDARD DRAWINGS AND CATALOG CUTS, SHOWING COMPLIANCE WITH THE REQUIREMENTS OF THIS SPECIFICATION.

1.04 DELIVERY, STORAGE, AND HANDLING

A. DELIVERY AND STORAGE

1. PIPING

a. INSPECT MATERIALS DELIVERED TO SITE FOR DAMAGE; STORE WITH MINIMUM OF HANDLING. STORE MATERIALS ON SITE IN ENCLOSURES OR UNDER PROTECTIVE COVERINGS. STORE PIPING, JOINTING MATERIALS, ETC., UNDER COVER OUT OF DIRECT SUNLIGHT. DO NOT STORE MATERIALS DIRECTLY ON THE GROUND. KEEP INSIDE OF PIPES AND FITTINGS FREE OF DIRT AND DEBRIS.

2. METAL ITEMS

a. CHECK UPON ARRIVAL; IDENTIFY AND SEGREGATE AS TO TYPES, FUNCTIONS, AND SIZES. STORE OFF THE GROUND IN A MANNER AFFORDING EASY ACCESSIBILITY AND NOT CAUSING EXCESSIVE RUSTING OR COATING WITH GREASE OR OTHER OBJECTIONABLE MATERIALS.

B. HANDLING

1. HANDLE PIPE, FITTINGS, AND OTHER ACCESSORIES IN SUCH MANNER AS TO ENSURE DELIVERY TO THE TRENCH IN SOUND UNDAMAGED CONDITION. CARRY, DO NOT DRAG, PIPE TO TRENCH.

PART 2 - PRODUCTS

2.01 PIPELINE MATERIALS

A. PIPE SHALL BE OF THE SIZES INDICATED AND SHALL CONFORM TO THE RESPECTIVE SPECIFICATIONS AND OTHER REQUIREMENTS SPECIFIED BELOW. SUBMIT MANUFACTURER'S STANDARD DRAWINGS OR CATALOG CUTS.

B. POLYVINYL CHLORIDE (PVC) PIPE GRAVITY SEWER PIPE

MATERIALS SHALL BE IDENTIFIED BY MANUFACTURER AS BEING SUITABLE FOR SANITARY SEWER APPLICATIONS. PIPE AND FITTINGS SHALL BE SOLID WALL AND CONFORM TO WSDOT SECTION 9-05.12(1), ASTM D 3034, SDR 35. JOINTS FOR SOLID WALL PVC PIPE SHALL CONFORM TO ASTM D 3212 USING ELASTOMERIC GASKETS CONFORMING TO ASTM F 477.

C. PRECAST MANHOLE

MATERIALS REQUIRED FOR CONSTRUCTION OF MANHOLE SHALL CONFORM TO WSDOT SECTION 7-05.2. MANHOLES, INCLUDING FRAME AND LID, SHALL BE DESIGNED FOR HS-25 WHEEL LIVE LOAD. MANHOLE SHALL CONFORM TO WSDOT STANDARD PLAN B-15.60-01, TYPE 3. RING AND COVER SHALL CONFORM TO WSDOT STANDARD PLAN B-30.70-03.

D. CLEANOUT

MATERIALS REQUIRED FOR CONSTRUCTION OF CLEANOUT SHALL CONFORM TO WSDOT SECTION 7-19.2. CLEANOUT, INCLUDING FRAME AND LID, SHALL BE DESIGNED FOR HS-25 WHEEL LIVE LOAD. CLEANOUT SHALL CONFORM TO WSDOT STANDARD PLAN B-85.40-00.

PART 3 - EXECUTION

3.01 INSTALLATION OF PIPELINES AND APPURTENANT CONSTRUCTION

A. GENERAL REQUIREMENTS FOR INSTALLATION OF PIPELINES WSDOT, SECTION 7-08 AND SECTION 7-17.3.

1. LOCATION

a. WORK COVERED BY THIS SECTION SHALL TERMINATE 5'-0" FROM FACE OF RESTROOM FACILITY. CURRENT UNIFORM PLUMBING CODE (UPC) APPLIES WITHIN 5'-0" OF RESTROOM. DO NOT LAY GRAVITY SANITARY SEWER LINE CLOSER HORIZONTALLY TO POTABLE WATER LINE THAN SHOWN ON DRAWINGS.

2. EARTHWORK

a. PERFORM TRENCHING / EARTHWORK OPERATIONS IN ACCORDANCE WITH SECTION 31 00 00 EARTHWORK.

3. CONNECTIONS TO EXISTING LINES

a. OBTAIN APPROVAL FROM THE PORT BEFORE MAKING CONNECTION TO EXISTING MANHOLE. CONDUCT WORK FOR MINIMAL TO NO INTERRUPTION OF SERVICE ON EXISTING LINE.

3.02 FIELD QUALITY CONTROL

A. FIELD TESTS AND INSPECTIONS

1. THE ENGINEER WILL CONDUCT FIELD INSPECTIONS AND WITNESS FIELD TESTS SPECIFIED BY THE REFERENCED WSDOT SPECIFICATION. THE CONTRACTOR SHALL PERFORM FIELD TESTS AND PROVIDE LABOR, EQUIPMENT, AND INCIDENTALS REQUIRED FOR TESTING, EXCEPT THAT WATER AND ELECTRIC POWER NEEDED FOR FIELD TESTS WILL BE FURNISHED. BE ABLE TO PRODUCE EVIDENCE, WHEN REQUIRED, THAT EACH ITEM OF WORK HAS BEEN CONSTRUCTED IN ACCORDANCE WITH THE DRAWINGS AND SPECIFICATIONS.

BID DOCUMENTS

MARK	REVISION DESCRIPTION	BY	APP.	DATE

BergerABAM
33301 9th Avenue South, Suite 300
Federal Way, Washington 98003-2600
(206) 431-2300 Fax: (206) 431-2250

SCOTT BRANLUND — STATE OF WASHINGTON — GENERAL ENGINEER — PROFESSIONAL ENGINEER — Sept 26, 2017

DRAWN BY MDB
DESIGN BY GDN
CHECK BY CSB
PROJ MGR CSB

PORT OF GRAYS HARBOR
28TH STREET BOAT LAUNCH IMPROVEMENTS
CONSTRUCTION PHASE II

UPLAND CIVIL SPECIFICATIONS - SHEET 4

DRAWING NO. G-6
PROJECT NO. FAWAT-12-145
DATE: 10/30/17
SHEET NO. 6 OF 48

Last Saved by: Garth.nelson on: Jul 27, 2017 3:00 PM File: Q:\FederalWay\2012\FAWAT-12-145\CADD\DwgsPhase_II\P21_G06.dwg

Copyright © BergerABAM. All Rights Reserved.

SECTION 34 40 00 - STORM DRAINAGE

PART 1 - GENERAL

1.01 SUMMARY

A. EXTENT OF WORK: THE LOCATION AND EXTENT OF STORM DRAINAGE WORK IS INDICATED ON THE DRAWINGS. THE WORK INCLUDES THE REQUIREMENTS FOR PROVIDING STORM SEWER PIPING, SURFACE TRENCHES, STORM DRAINAGE STRUCTURES, AND TREATMENT DEVICES.

1.02 REFERENCES

A. WASHINGTON STATE DEPARTMENT OF TRANSPORTATION (WSDOT) STANDARD SPECIFICATIONS FOR ROAD, BRIDGE, AND MUNICIPAL CONSTRUCTION, 2014 EDITION.

B. AMERICAN ASSOCIATION OF STATE HIGHWAY AND TRANSPORTATION OFFICIALS (AASHTO).

C. AMERICAN WATER WORKS ASSOCIATION (AWWA).

1.03 QUALITY ASSURANCE:

A. INSPECTION AND TESTING: NECESSARY TESTING AND INSPECTION WILL BE PERFORMED BY THE CONTRACTOR AND WITNESSED BY THE PORT. THE PORT MAY OBTAIN COPIES OF TEST RESULTS FROM THE CONTRACTOR AT NO COST.

1.04 SUBMITTALS

SUBMIT THE FOLLOWING FOR ACCEPTANCE:

A. PRODUCT DATA: SUBMIT PRODUCT DATA SHOWING CONFORMANCE TO THE REQUIREMENTS OF THIS SPECIFICATION FOR ALL ITEMS INCLUDED IN THIS SECTION AND DRAINAGE FEATURES SHOWN ON DRAWINGS.

B. SUBMIT MANUFACTURER'S INFORMATION SHOWING LOAD RATING FOR TRENCH DRAIN FRAME AND GRATE. TRENCH DRAIN FRAME AND GRATE SHALL BE RATED FOR AIRPORT PROOF LOADS OF 100,000 LB OR 200,000 LB PROOF LOAD.

C. MANUFACTURER'S INSTALLATION INSTRUCTIONS TO BE FOLLOWED DURING CONSTRUCTION.

D. SHOP DRAWINGS FOR ALL DRAINAGE TREATMENT STRUCTURES.

PART 2 - PRODUCTS

2.01 POLYVINYL CHLORIDE (PVC) PIPE GRAVITY STORM SEWER PIPE

A. PIPE AND FITTINGS SHALL BE SOLID WALL AND CONFORM TO WSDOT SECTION 9-05.12(1) PIPE AND FITTINGS SHALL BE SOLID WALL AND CONFORM TO WSDOT SECTION 9-05.12(1), ASTM D 3034, SDR 35. JOINTS FOR SOLID WALL PVC PIPE SHALL CONFORM TO ASTM D 3212 USING ELASTOMERIC GASKETS CONFORMING TO ASTM F 477.

2.02 TRENCH DRAIN FRAME AND GRATE AT BOAT LAUNCH:

A. FRAME AND GRATE SHALL BE EXTRA HEAVY DUTY FOR HIGH STRENGTH AND DURABILITY, AND BE OF THE SAME MANUFACTURER. FRAME (GRAY OR DUCTILE IRON) AND GRATE (DUCTILE IRON) SHALL BE BOLTED TOGETHER AND RATED FOR H-20 LOADS (MIN) BASED ON TESTING OF A 40,000 LB PROOF LOAD ON A 9" X 9" SQ AREA (494 PSI) FOR ONE MINUTE WITH NO SIGNS OF CRACKING OR DETRIMENTAL PERMANENT DEFORMATION IN ACCORDANCE WITH AASHTO M-306. GALVANIZED MATERIALS ARE NOT ACCEPTABLE. FRAME SHALL HAVE EMBEDDED TABS WITH OPENINGS FOR REINFORCING TO PASS THROUGH. FRAME AND GRATE SHALL BE SIZED FOR A 12" WIDE TRENCH OPENING. GRATE OPENINGS SHALL MEET ADA ACCESSIBILITY REQUIREMENTS WITH TYPE 'C' SLOTS WITH LONG DIRECTION OF OPENING PARALLEL WITH TRENCH DRAIN (PERPENDICULAR TO VEHICLE AND PEDESTRIAN TRAFFIC). WIDTH OF OPENING SHALL BE 1/2". TOP OF GRATE SHALL HAVE A NON-SLIP SURFACE. FRAME AND GRATE SHALL BE EAST JORDAN MODEL 6954, PRODUCT NO. 00695401, OR APPROVED EQUAL.

B. BOLTED FRAMES AND GRATES SHALL BE SHIPPED ASSEMBLED. AT NO TIME SHALL UNITS BE DISASSEMBLED DURING INSTALLATION. ENSURE GAP BETWEEN FRAME AND GRATE HAS NOT CHANGED IN TRANSPORT.

C. 12" SIZE OF TRENCH DRAIN SHOWN ON DRAWINGS REPRESENTS WIDTH OF CONCRETE TRENCH OPENING BELOW GRATE, NOT OVERALL WIDTH OF GRATE.

2.03 ALL FRAME AND LID / GRATE CASTINGS:

A. METAL CASTINGS SHALL CONFORM TO WSDOT SECTION 9-05.15, AND SHALL BE RATED FOR H-20 LOADS BASED ON TESTING OF A 40,000 LB PROOF LOAD ON A 9" X 9" SQ AREA (494 PSI) FOR ONE MINUTE WITH NO SIGNS OF CRACKING OR DETRIMENTAL PERMANENT DEFORMATION IN ACCORDANCE WITH AASHTO M-306.

B. CASTINGS SHALL BE OF UNIFORM QUALITY, FREE FROM SAND HOLES, GAS HOLES, SHRINKAGE, CRACKS AND OTHER SURFACE DEFECTS. CASTINGS SHALL BE GROUND SMOOTH AND WELL CLEANED BY SHOT BLASTING. BEARING SURFACES BETWEEN FRAMES AND GRATES SHALL BE CAST OR MACHINED WITH SUCH PRECISION TO PREVENT ROCKING.

C. CASTINGS SHALL BE IDENTIFIABLE AND SHOW, AT A MINIMUM, THE FOLLOWING: NAME OF THE PRODUCING FOUNDRY, ASTM MATERIAL DESIGNATION, AND PART NUMBER..

2.04 WATER QUALITY VAULT AND CATCHBASINS:

A. WATER QUALITY CATCHBASINS AND WATER QUALITY VAULT SHALL BE OF SAME MANUFACTURER - OLDCASTLE STORMWATER SOLUTIONS (KRISTAR) PERK FILTER FOR WASHINGTON STATE DESIGNS, OR APPROVED EQUAL.

B. VAULT AND CATCHBASIN UNITS SHALL BE CONSTRUCTED OF PRECAST CONCRETE WITH INTERNAL MEDIA FILLED FILTER CARTRIDGES FOR TREATMENT OF THE STORMWATER AND A HIGH FLOW BYPASS. STORMWATER DESIGN FOR THIS PROJECT IS PER WASHINGTON STATE DEPARTMENT OF ECOLOGY REQUIREMENTS. TREATMENT UNITS SHALL HAVE WASHINGTON STATE DEPARTMENT OF ECOLOGY "GENERAL USE LEVEL DESIGNATION" (GULD) FOR PROVIDING BASIC TREATMENT. ANY STEEL COMPONENTS SHALL BE GALVANIZED WITH AN ADDITIONAL POWDER COATING FOR MARINE APPLICATION AND DESIGN LIFE OF 50 YEARS. MINIMUM ACTUAL WATER QUALITY FLOWRATES FOR EACH UNIT LOCATION IS AS FOLLOWS:

1. FIVE 18" CARTRIDGES IN VAULT NEAR BOAT LAUNCH:

   44 GPM (WQ) & 252 GPM (100 YR PEAK)

2. TWO 18" CARTRIDGE WQCB STA 2+02 ALONG 28TH ST.:

   12 GPM (WQ) & 65 GPM (100 YR PEAK)

3. THREE 18" CARTRIDGE WQCB STA 5+42 ALONG 28TH ST:

   26 GPM (WQ) & 144 GPM (100 YR PEAK)

4. (2) FOUR 18" CARTRIDGE WQCB'S NEAR HENDERSON:

   73 GPM (WQ) & 410 GPM (100 YR PEAK) FOR BOTH

PART 3 - EXECUTION

3.01 GENERAL:

A. CONSTRUCTION REQUIREMENTS SHALL BE IN ACCORDANCE WITH WSDOT STANDARD SPECIFICATIONS, SECTION 7-04.3 AND 7-08.3.

3.02 EARTHWORK:

A. EXCAVATION, BEDDING, AND BACKFILLING SHALL BE AS SPECIFIED IN SECTION 31 00 00 -EARTHWORK OF THESE SPECIFICATIONS.

3.03 SURVEY LINE AND GRADE:

A. ALIGNMENT AND GRADE OF SLOPED GRAVITY DRAINAGE PIPING SHALL BE PERFORMED BY CONTRACTOR USING LASER BEAM (NOT TAUT LINE) AND METHODS DESCRIBED IN SECTION 7-08.3(2)A OF WSDOT STANDARD SPECIFICATIONS.

3.04 INSTALLATION OF TRENCH DRAIN:

FURNISH ALL NECESSARY LABOR, MATERIALS, AND EQUIPMENT TO CONSTRUCT / INSTALL TRENCH DRAIN IN ACCORDANCE WITH MANUFACTURER'S INSTRUCTIONS AND DETAILS ON THE DRAWINGS. FRAME AND GRATE SHALL BE SHIPPED AND INSTALLED BOLTED TOGETHER. DO NOT DISASSEMBLE BOLTED GRATES. CHECK FRAME WIDTH INSIDE, AND ALIGN TRENCH RAIL AND GRATE BEFORE POURING CONCRETE. BE CAUTIOUS WHEN LINING UP ADJACENT ASSEMBLIES. BOLT HARDWARE SHALL BE STAINLESS STEEL.

3.05 INSTALLATION OF UNDERGROUND PIPE:

FURNISH ALL NECESSARY LABOR, MATERIALS, AND EQUIPMENT FOR THE WORK AND PUMP, BAIL, OR OTHERWISE DEWATER THE TRENCH FOR THE DURATION OF THE CONSTRUCTION AND BACKFILL PERIOD.

A. GENERAL: LAYING PIPE SHALL BE IN ACCORDANCE WITH SECTION 7-08.3(2) OF WSDOT STANDARD SPECIFICATIONS.

B. PLACING: PLACE THE PIPE IN APPROPRIATE BEDDING GRADED TO CONFORM TO THE GRADES AND ALIGNMENT INDICATED ON THE DRAWINGS AND PREPARED AS SPECIFIED. ENSURE THAT THE PIPE HAS A FULL, SOLID BEARING ALONG ITS ENTIRE LENGTH. PROVIDE SMALL DEPRESSIONS FOR PIPE BELLS WHEN UTILIZED. MAKE MINOR ADJUSTMENTS TO LINE AND GRADE BY SCRAPING AWAY, OR FILLING IN WITH, BEDDING MATERIAL. DO NOT SUPPORT PIPES ON BLOCKS OR MOUNDS OF ANY NATURE.

C. JOINTING: TAKE CARE TO PROPERLY ALIGN THE PIPE AND CLEAN THE BELL AND SPIGOT OR TONGUE OF THE PIPE. GASKETS MUST BE STRAIGHT, PROPERLY LUBRICATED AND WITHOUT TWIST. THE PIPE SHALL BE PARTIALLY SUPPORTED BY HAND, SLING, OR CRANE, AS REQUIRED, TO MINIMIZE LATERAL PRESSURE ON THE GASKET AND TO MAINTAIN CONCENTRICITY UNTIL THE PIPE HAS BEEN FORCED INTO FINAL LONGITUDINAL POSITION IN ACCORDANCE WITH THE MANUFACTURER'S RECOMMENDATIONS. PIPE HANDLING, AFTER THE GASKET HAS BEEN AFFIXED, SHALL BE CAREFULLY CONTROLLED TO AVOID BUMPING THE GASKET AND, THUS, KNOCKING IT OUT OF POSITION OR LOADING IT WITH DIRT OR OTHER FOREIGN MATERIAL. GASKETS SO DISTURBED SHALL BE REMOVED, CLEANED, RELUBRICATED, AND REPLACED BEFORE THE JOINT IS ATTEMPTED. APPLY SUFFICIENT RESTRAINT TO THE LINE TO ENSURE THAT THE JOINTS, ONCE HOME, ARE HELD SO BY TAMPING FILL MATERIAL UNDER AND ALONGSIDE THE PIPE. AT THE END OF THE DAY'S WORK, BLOCK THE LAST PIPE IN SUCH A MANNER AS MAY BE REQUIRED TO PREVENT CREEP DURING DOWN TIME.

3.06 INSTALLATION OF DRAINAGE STRUCTURES:

A. FURNISH ALL NECESSARY LABOR, MATERIALS, AND EQUIPMENT FOR THE WORK AND PUMP, BAIL, OR OTHERWISE DEWATER THE TRENCH OR PIT FOR THE DURATION OF THE CONSTRUCTION AND BACKFILL PERIOD.

1. GENERAL: INSTALLATION OF DRAINAGE STRUCTURES SHALL BE IN ACCORDANCE WITH SECTION 7-05.3 OF WSDOT STANDARD SPECIFICATIONS.

2. ADDITIONAL REQUIREMENTS FOR DRAINAGE STRUCTURES:

   a. PLACE DRAINAGE STRUCTURES AT THE ELEVATION AND LOCATION INDICATED ON THE DRAWINGS UPON THE APPROPRIATE BEDDING, PREPARED IN ACCORDANCE WITH SECTION 31 00 00_EARTHWORK.

   b. CAREFULLY PLACE PRECAST DRAINAGE STRUCTURES ON THE PREPARED BEDDING SO EACH IS SUPPORTED FULLY AND UNIFORMLY IN TRUE ALIGNMENT.

   c. ALL LIFT HOLES AND ALL JOINTS BETWEEN PRECAST ELEMENTS SHALL BE THOROUGHLY WETTED AND THEN COMPLETELY FILLED WITH MORTAR, SMOOTHED AND POINTED BOTH INSIDE AND OUT, TO ENSURE WATER TIGHTNESS.

   d. PLACE PRECAST SECTIONS AND ALIGN TO PROVIDE VERTICAL SIDES AND VERTICAL ALIGNMENT OF THE LADDER RUNGS. THE COMPLETED DRAINAGE STRUCTURE SHALL BE RIGID, TRUE TO DIMENSIONS AND WATERTIGHT.

   e. CONSTRUCT DRAINAGE VAULT STRUCTURE TO PROVIDE ADJUSTMENT SPACE FOR SETTING COVER FASTENINGS TO A FINISHED GRADE. THE DRAINAGE STRUCTURE GRADE FURNISHED BY THE ENGINEER FOR CONSTRUCTION ON DRAWINGS INDICATES THE APPROXIMATE FINISH GRADE AND TOP OF GRATE / LID FOR DRAINAGE STRUCTURES. NO SEPARATE PAYMENT FOR FINAL ADJUSTMENT OF THE COVER CASTINGS FOR NEW CONSTRUCTION WILL BE MADE, AND ALL COSTS THEREOF WILL BE CONSIDERED AS INCIDENTAL AND BE INCLUDED IN THE PRICE FOR THE DRAINAGE STRUCTURE.

   f. TOP SLAB OF DRAINAGE STRUCTURE VAULTS SHALL BE NOT MORE THAN 20-INCHES FROM FINISH GRADE. HEIGHT OF ADJUSTING RINGS SHALL NOT BE LESS THAN 2-INCHES AND NOT MORE THAN 16-INCHES.

   g. PIPE CONNECTIONS: PLACE ALL PVC PIPES ENTERING OR LEAVING THE DRAINAGE STRUCTURES ON FIRMLY COMPACTED BEDDING, PARTICULARLY WITHIN THE AREA OF THE DRAINAGE STRUCTURE EXCAVATION, WHICH MAY BE DEEPER THAN THAT OF THE PIPE TRENCH AND PROVIDE A FLEXIBLE JOINT (BELL AND SPIGOT) WITHIN 12 INCHES OF THE MANHOLE STRUCTURE. TAKE SPECIAL CARE TO SEE THE OPENINGS THROUGH WHICH PIPES ENTER THE STRUCTURE ARE COMPLETELY AND FIRMLY RAMMED FULL OF MORTAR TO ENSURE WATER TIGHTNESS, AND END OF PIPE CUT TO BE FLUSH WITH INSIDE FACE OF CATCH BASIN STRUCTURES. LINK-SEAL OR EQUAL WATERTIGHT DEVICES MAY BE USED IN-LIEU OF MORTAR TO FILL VOID SPACE BETWEEN PIPE AND WALL OF STRUCTURE.

   h. BACKFILL: HAND-PLACE BACKFILL AROUND THE DRAINAGE STRUCTURE, EXTENDING AT LEAST ONE PIPE LENGTH INTO EACH TRENCH AND TAMP WITH SELECT MATERIAL UP TO AN ELEVATION OF SIX INCHES ABOVE THE CROWN OF ALL ENTERING PIPES. CONFORM TO THE APPLICABLE PROVISIONS OF SECTION 31 00 00 - EARTHWORK. BACKFILL AROUND PIPE ON DOCK SHALL BE AS DETAILED ON THE DRAWINGS.

3.07 FIELD QUALITY CONTROL:

A. CONTRACTOR SHALL PERFORM CLEANING AND TESTING OF THE STORM DRAINAGE SYSTEM IN ACCORDANCE WITH SECTION 7-04.3(1) AND OF WSDOT STANDARD SPECIFICATIONS.

BID DOCUMENTS

MARK	REVISION DESCRIPTION	BY	APP.	DATE

BergerABAM
33301 9th Avenue South, Suite 300
Federal Way, Washington 98003-2600
(206) 431-2300 Fax: (206) 431-2250

SCOTT BRANLUND STATE OF WASHINGTON REGISTERED PROFESSIONAL ENGINEER

DRAWN BY MDB
DESIGN BY GDN
CHECK BY CSB
PROJ MGR CSB

PORT OF GRAYS HARBOR
28TH STREET BOAT LAUNCH IMPROVEMENTS
CONSTRUCTION PHASE II

UPLAND CIVIL SPECIFICATIONS - SHEET 5

DRAWING NO. G-7
PROJECT NO. FAWAT-12-145
DATE: 10/30/17
SHEET NO. 7 OF 48

Last Saved by: Garth.nelson on: Jul 27, 2017 3:00 PM File: Q:\FederalWay\2012\FAWA1-12-145\CADD\Dwgs\Phase_II\P21_G07.dwg

Copyright © BergerABAM. All Rights Reserved.

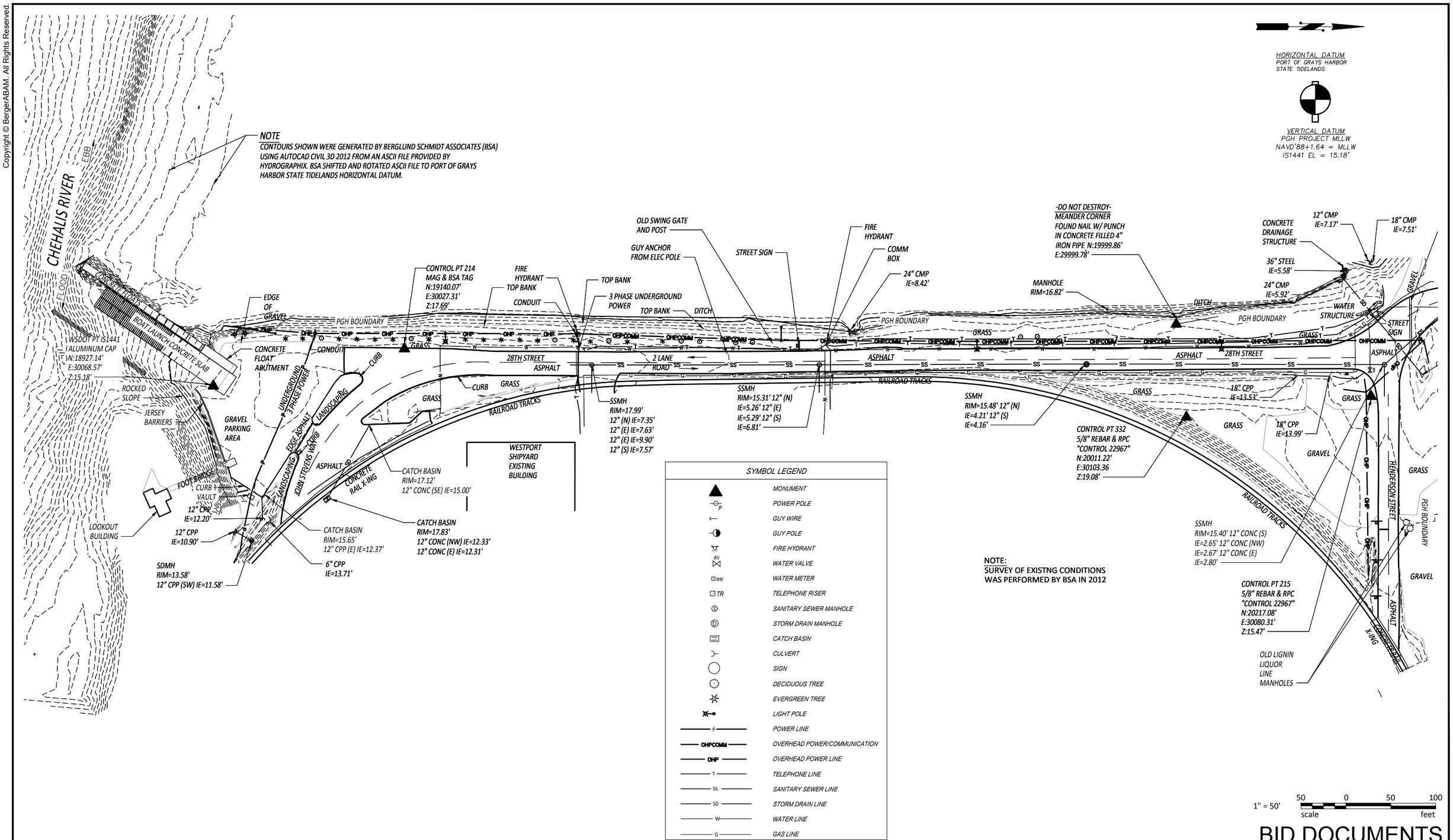

NOTE:
SURVEY OF EXISTNG CONDITIONS
WAS PERFORMED BY BSA IN 2012

1" = 50'
50 0 50 100
scale feet

BID DOCUMENTS

MARK	REVISION DESCRIPTION	BY	APP.	DATE

BergerABAM
33301 9th Avenue South, Suite 300
Federal Way, Washington 98003-2600
(206) 431-2300 Fax: (206) 431-2250

SCOTT BRANLUND
STATE OF WASHINGTON
REGISTERED PROFESSIONAL ENGINEER
Oct 30, 2017

DRAWN BY MDB
DESIGN BY VHN
CHECK BY CSB
PROJ MGR CSB

PORT OF GRAYS HARBOR
28TH STREET BOAT LAUNCH IMPROVEMENTS
CONSTRUCTION PHASE II

EXISTING CONDITIONS

DRAWING NO. C-1
PROJECT NO. FAWAT-12-145
DATE: 10/30/17
SHEET NO. 8 OF 48

Last Saved by: Garth.nelson on: Jul27, 2017 3:00 PM File: Q:\FederalWay\2012\FAWAT-12-145\CADD\Dwgs\Phase_II\P22_C01.dwg

Last Saved on Tue Aug 16 2005 at 10:03AM by Jacob File Name: O:\2006\FAWAT-06-001\CADD\dwgs\C-1.dwg Scale: 1

Copyright © BergerABAM. All Rights Reserved.

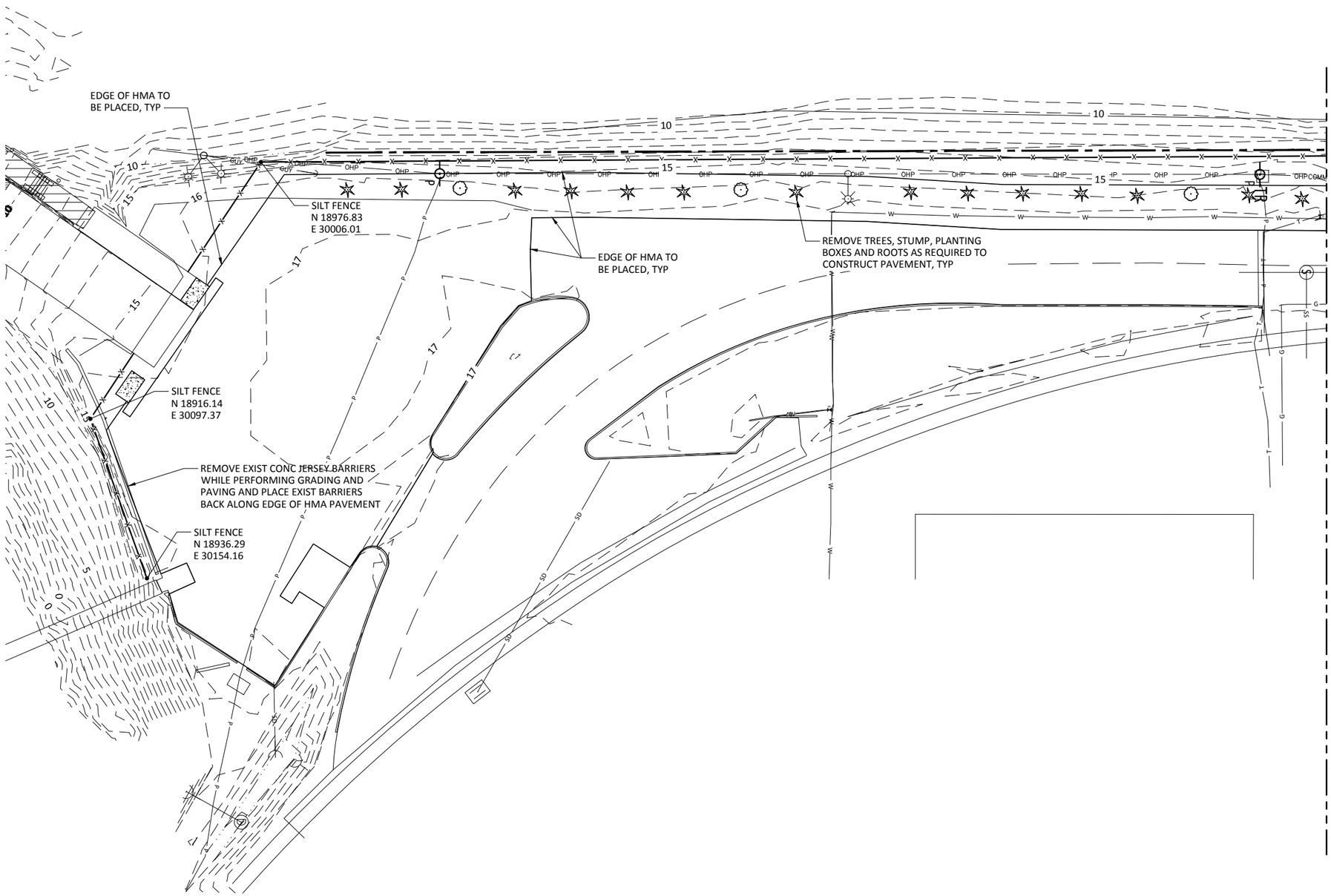

HORIZONTAL DATUM
PORT OF GRAYS HARBOR
STATE TIDELANDS

VERTICAL DATUM
PGH PROJECT MLLW
NAVD'88+1.64 = MLLW
IS1441 EL = 15.18'

NOTES:

1. REFER TO ELECTRICAL DRAWINGS FOR DEMO RELATED TO ELECTRICAL UTILITY.

LEGEND:

—x——x——x— SILT FENCE & LIMITS OF CLEARING AND GRUBBING

——— - ——— PORT OF GRAYS HARBOR BOUNDARY

1" = 20' 20 0 20 40
scale feet

BID DOCUMENTS

MARK	REVISION DESCRIPTION	BY	APP.	DATE

BergerABAM
33301 9th Avenue South, Suite 300
Federal Way, Washington 98003-2600
(206) 431-2300 Fax: (206) 431-2250

SCOTT BRANLUND STATE OF WASHINGTON REGISTERED PROFESSIONAL ENGINEER

DRAWN BY MDB
DESIGN BY VHN
CHECK BY CSB
PROJ MGR CSB

PORT OF GRAYS HARBOR
28TH STREET BOAT LAUNCH IMPROVEMENTS
CONSTRUCTION PHASE II

TESC & DEMO PLAN - SHEET 1

DRAWING NO. C-2
PROJECT NO. FAWAT-12-145
DATE: 10/30/17
SHEET NO. 9 OF 48

Last Saved by: Garth.nelson. on: Jul 27, 2017 3:00 PM File: Q:\FederalWay\2012\FAWAT-12-145\CADD\Dwgs\Phase_II\P22_C02.dwg

Copyright © BergerABAM. All Rights Reserved.

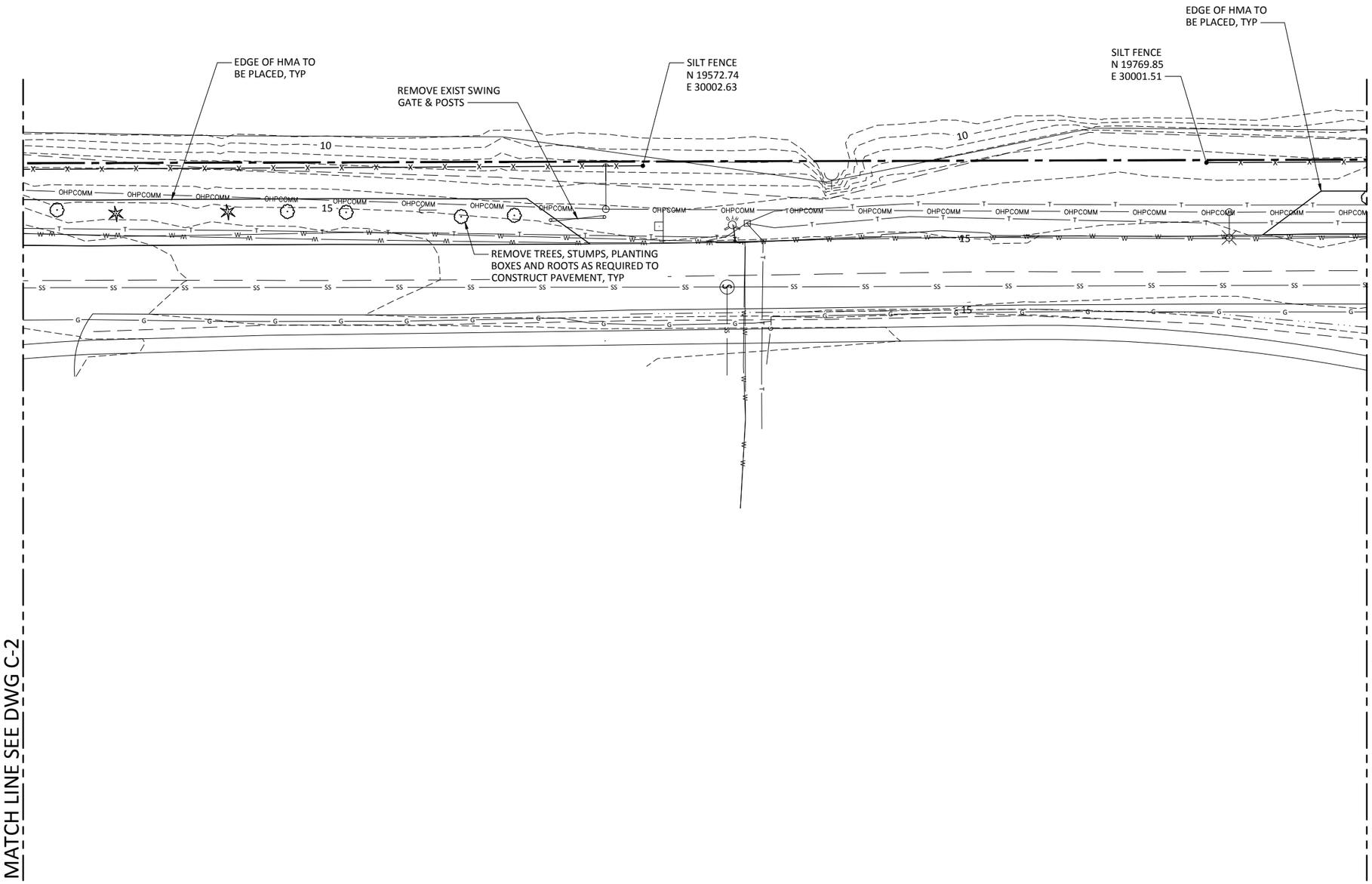

HORIZONTAL DATUM
PORT OF GRAYS HARBOR
STATE TIDELANDS

VERTICAL DATUM
PGH PROJECT MLLW
NAVD'88+1.64 = MLLW
IS1441 EL = 15.18'

LEGEND:

—x——x——x— SILT FENCE & LIMITS OF CLEARING AND GRUBBING

PORT OF GRAYS HARBOR BOUNDARY

1" = 20' 20 0 20 40
scale feet

BID DOCUMENTS

MARK	REVISION DESCRIPTION	BY	APP.	DATE

BergerABAM
33301 9th Avenue South, Suite 300
Federal Way, Washington 98003-2600
(206) 431-2300 Fax: (206) 431-2250

SCOTT BRANLUND STATE OF WASHINGTON REGISTERED PROFESSIONAL ENGINEER

DRAWN BY MDB
DESIGN BY VHN
CHECK BY CSB
PROJ MGR CSB

PORT OF GRAYS HARBOR
28TH STREET BOAT LAUNCH IMPROVEMENTS
CONSTRUCTION PHASE II

TESC & DEMO PLAN - SHEET 2

DRAWING NO. C-3
PROJECT NO. FAWAT-12-145
DATE: 10/30/17
SHEET NO. 10 OF 48

Last Saved by: Garth.nelson on: Jul 27, 2017 3:00 PM File: Q:\FederalWay\2012\FAWAT-12-145\CADD\Dwgs\Phase_II\P22_C03.dwg

Copyright © BergerABAM. All Rights Reserved.

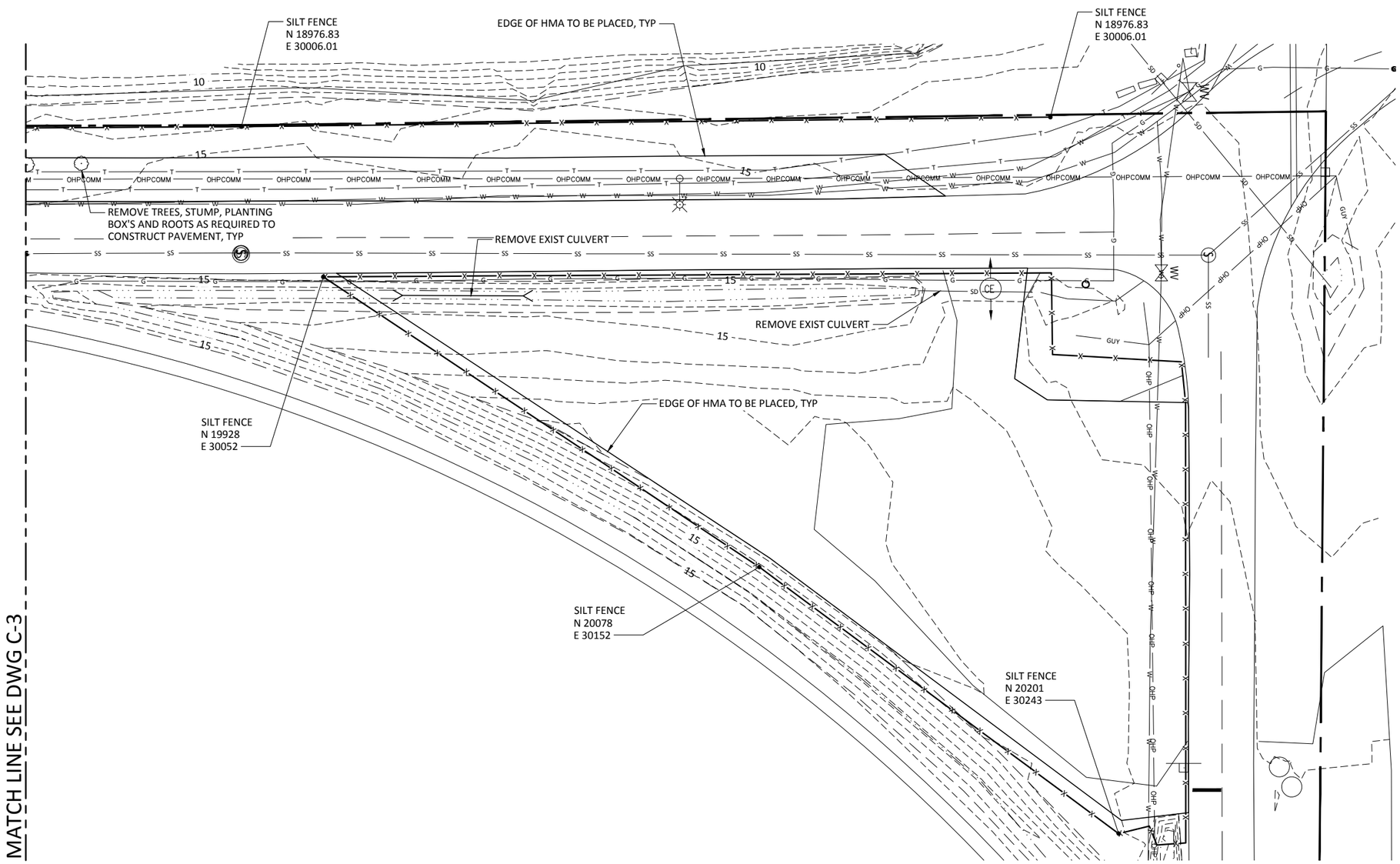

HORIZONTAL DATUM
PORT OF GRAYS HARBOR
STATE TIDELANDS

VERTICAL DATUM
PGH PROJECT MLLW
NAVD'88+1.64 = MLLW
IS1441 EL = 15.18'

LEGEND:

- SILT FENCE & LIMITS OF CLEARING AND GRUBBING
- PORT OF GRAYS HARBOR BOUNDARY
- STABILIZED CONSTRUCTION ENTRANCE

1" = 20' scale — 20 0 20 40 feet

BID DOCUMENTS

MARK	REVISION DESCRIPTION	BY	APP.	DATE

BergerABAM
33301 9th Avenue South, Suite 300
Federal Way, Washington 98003-2600
(206) 431-2300 Fax: (206) 431-2250

SCOTT BRANLUND — STATE OF WASHINGTON — REGISTERED PROFESSIONAL ENGINEER

DRAWN BY MDB
DESIGN BY VHN
CHECK BY CSB
PROJ MGR CSB

PORT OF GRAYS HARBOR
28TH STREET BOAT LAUNCH IMPROVEMENTS
CONSTRUCTION PHASE II

TESC & DEMO PLAN - SHEET 3

DRAWING NO. C-4
PROJECT NO. FAWAT-12-145
DATE: 10/30/17
SHEET NO. 11 OF 48

Last Saved by: Garth.nelson on: Jul 27, 2017 3:01 PM File: Q:\FederalWay\2012\FAWAT-12-145\CADD\Dwgs\Phase_II\P22_C04.dwg

Copyright © BergerABAM. All Rights Reserved.

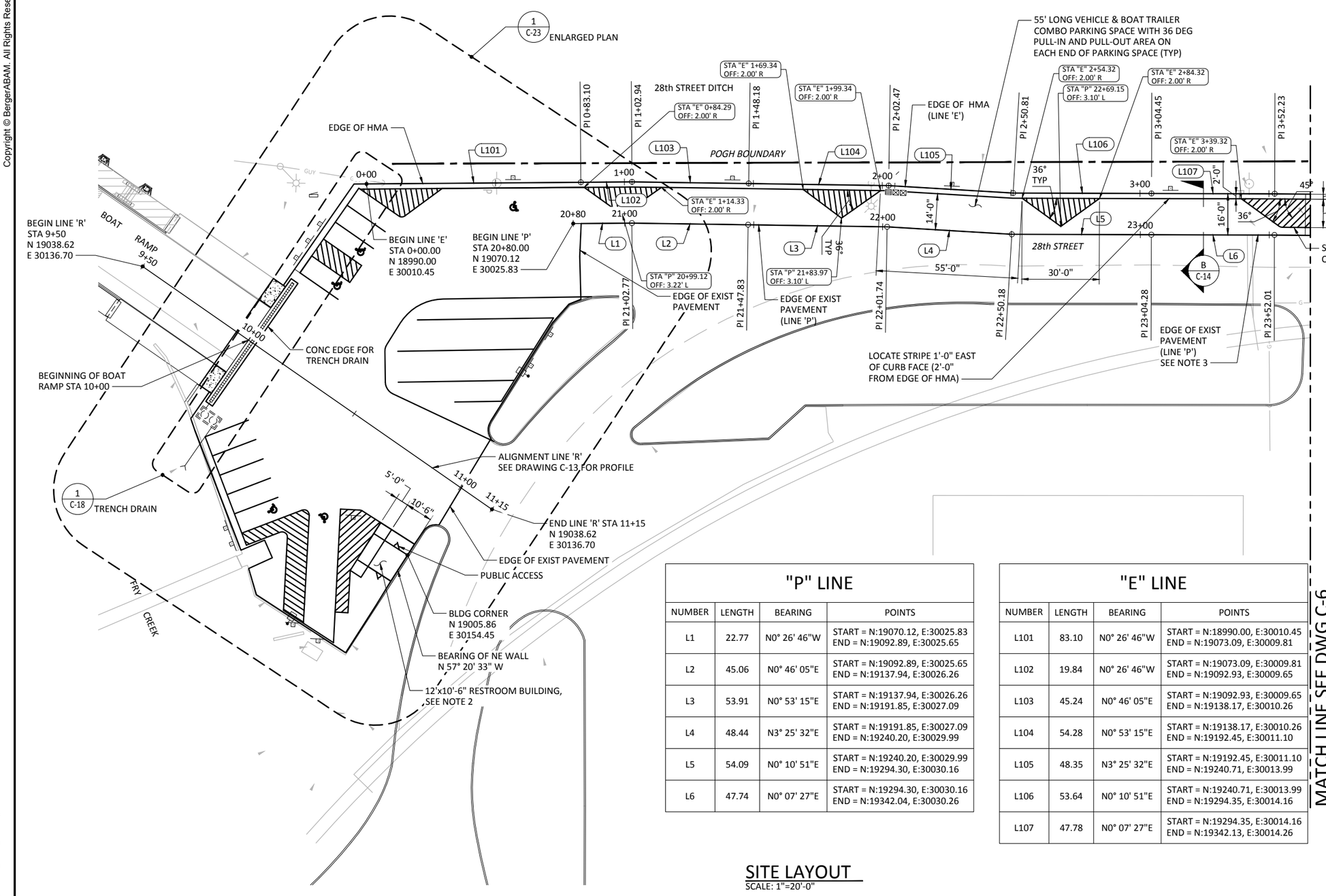

NOTES:

1. ALIGNMENT LINE 'E' IS A 16'-0" PARALLEL OFFSET OF ALIGNMENT LINE 'P'.
2. RESTROOM BUILDING WILL BE PROVIDED BY THE PORT, WHICH WILL BE SIMILAR TO BUILDING SHOWN ON C-25. CONTRACTOR SHALL PROVIDE UTILITIES FOR BUILDING (REFER TO C-24) AND CONCRETE FOUNDATION. FOUNDATION SHALL BE IN ACCORDANCE WITH THE APPLICABLE PROVISIONS OF THE CURRENT CITY OF HOQUIAM BUILDING CODE AND THE RECOMMENDATIONS OF THE RESTROOM BUILDING MANUFACTURER. PORT WILL DELIVER BUILDING TO SITE ON TRUCK, AND CONTRACTOR SHALL OFF LOAD AND INSTALL THE RESTROOM BUILDING PER THE MANUFACTURERS INSTRUCTIONS.
3. SAW-CUT LINE AND PAVING LIMITS ALONG 28TH STREET IS LOCATED 6 INCHES EAST OF EXISTING EDGE OF PAVEMENT (LINE 'P'). THEREFORE, FOR SOUTH AREA OF 28TH STREET (PAVEMENT EXTENSION W/ CURB) PAVING WIDTH IS 16'-6" AS SHOWN IN SECTION 'B' ON DWG C-14. REPLACE EXISTING WHITE FOG-LINE STRIPING WHERE DISTURBED BY CONSTRUCTION.
4. METHOD TO CORRECTLY DETERMINE LAYOUT OF THE PAVEMENT EXTENSION & STRIPING ADJACENT AND PARALLEL TO 28TH STREET:
   - A. SAW-CUT EXIST ASPHALT PAVEMENT 6 INCHES EAST OF WEST EDGE OF PAVEMENT ALONG 28TH STREET WHERE PAVEMENT EXTENSION IS TO BE CONSTRUCTED.
   - B. FOR PAVEMENT EXTENSION SOUTH OF INGRAM STREET: FROM SAW-CUT LINE, OFFSET A DISTANCE OF 16'-6". THIS OFFSET WILL BE EDGE OF PAVEMENT EXTENSION (SEE SECTION 'B' ON DWG C-14). CRUSHED SURFACING BASE COURSE EXTENDS 1'-0" WEST OF PAVEMENT EDGE.
     FOR PAVEMENT EXTENSION NORTH OF INGRAM STREET: FROM SAW-CUT LINE, OFFSET A DISTANCE OF 15'-6". THIS OFFSET WILL BE EDGE OF PAVEMENT EXTENSION (SEE SECTION 'A' ON DWG C-15). NO EXTRUDED CURB FOR THIS PAVEMENT SECTION WITH ADJACENT GRASSY FILTER STRIP. CRUSHED SURFACING BASE COURSE EXTENDS 1'-0" WEST OF PAVEMENT EDGE.
   - C. FOR PAVEMENT EXTENSION SOUTH OF INGRAM STREET, CONSTRUCT EXTRUDED CONCRETE CURB SUCH THAT EAST FACE OF CURB IS 1'-0" FROM EDGE OF PAVEMENT EXTENSION.
   - D. FOR PAVEMENT EXTENSION SOUTH OF INGRAM STREET, WHITE STRIPE FOR BOAT TRAILER PARKING SHALL BE LOCATED 2'-0" FROM AND PARALLEL TO EDGE OF PAVEMENT EXTENSION. WHITE STRIP FOR PRIVATELY OWNED VEHICLES (POV) W/O BOAT TRAILER SHOWN ON C-6 SHALL BE LOCATED 5'-0" FROM AND PARALLEL TO EDGE OF PAVEMENT EXTENSION. STRIPING FOR POV W/O BOAT TRAILER PARKING SHALL CREATE SPACES THAT ARE 8'-0" WIDE. FOR PAVEMENT EXTENSION NORTH OF INGRAM STREET, WHITE STRIPE FOR BOAT TRAILER PARKING SHALL BE LOCATED 1'-0" FROM AND PARALLEL TO EDGE OF PAVEMENT EXTENSION.
   - E. LENGTH OF VEHICLE AND BOAT TRAILER PARKING BETWEEN MANEUVERING ISLANDS SHALL BE 55'-0" IN ALL CASES. LENGTH OF MANEUVERING ISLAND ADJACENT TO CURB SHALL BE 30'-0" IN ALL CASES. ANGLE OF PULL-IN / PULL-OUT TO CREATE MANUEVERING ISLAND SHALL BE 36 DEGREES IN ALL CASES. RESULTING DIMENSION FROM TIP OF MANUEVERING ISLAND TO STRIPE PARALLEL AND ADJACENT TO CURB IS APPROXIMATELY 10'-9" TO 10'-11" DEPENDING ON ANGLE OF EXISTING PAVEMENT EDGE & CORRESPONDING PARALLEL ANGLE OF EDGE OF PAVEMENT EXTENSION.
   - F. RESTRIPE EXISTING WHITE FOG-LINE ADJACENT TO SAW-CUT LINES AS REQUIRED / IF DAMAGED DURING CONSTRUCTION.

"P" LINE

NUMBER	LENGTH	BEARING	POINTS
L1	22.77	N0° 26' 46"W	START = N:19070.12, E:30025.83 END = N:19092.89, E:30025.65
L2	45.06	N0° 46' 05"E	START = N:19092.89, E:30025.65 END = N:19137.94, E:30026.26
L3	53.91	N0° 53' 15"E	START = N:19137.94, E:30026.26 END = N:19191.85, E:30027.09
L4	48.44	N3° 25' 32"E	START = N:19191.85, E:30027.09 END = N:19240.20, E:30029.99
L5	54.09	N0° 10' 51"E	START = N:19240.20, E:30029.99 END = N:19294.30, E:30030.16
L6	47.74	N0° 07' 27"E	START = N:19294.30, E:30030.16 END = N:19342.04, E:30030.26

"E" LINE

NUMBER	LENGTH	BEARING	POINTS
L101	83.10	N0° 26' 46"W	START = N:18990.00, E:30010.45 END = N:19073.09, E:30009.81
L102	19.84	N0° 26' 46"W	START = N:19073.09, E:30009.81 END = N:19092.93, E:30009.65
L103	45.24	N0° 46' 05"E	START = N:19092.93, E:30009.65 END = N:19138.17, E:30010.26
L104	54.28	N0° 53' 15"E	START = N:19138.17, E:30010.26 END = N:19192.45, E:30011.10
L105	48.35	N3° 25' 32"E	START = N:19192.45, E:30011.10 END = N:19240.71, E:30013.99
L106	53.64	N0° 10' 51"E	START = N:19240.71, E:30013.99 END = N:19294.35, E:30014.16
L107	47.78	N0° 07' 27"E	START = N:19294.35, E:30014.16 END = N:19342.13, E:30014.26

SITE LAYOUT
SCALE: 1"=20'-0"

1" = 20' scale — 20 0 20 40 feet

BID DOCUMENTS

MARK	REVISION DESCRIPTION	BY	APP.	DATE

BergerABAM
33301 9th Avenue South, Suite 300
Federal Way, Washington 98003-2600
(206) 431-2300 Fax: (206) 431-2250

SCOTT BRANLUND — STATE OF WASHINGTON — REGISTERED PROFESSIONAL ENGINEER

DRAWN BY MDB
DESIGN BY VHN
CHECK BY CSB
PROJ MGR CSB

PORT OF GRAYS HARBOR
28TH STREET BOAT LAUNCH IMPROVEMENTS CONSTRUCTION PHASE II

SITE LAYOUT - SHEET 1

DRAWING NO. C-5
PROJECT NO. FAWAT-12-145
DATE: 10/30/17
SHEET NO. 12 OF 48

Last Saved by: Garth.nelson on: Jul 27, 2017 3:01 PM File: Q:\FederalWay\2012\FAWAT-12-145\CADD\Dwgs\Phase_II\P22_C05.dwg
Last Saved on Tue Aug 16 2005 at 10:03AM by Jacob File Name: O:\2006\FAWAT-06-001\CADD\dwgs\C-1.dwg Scale: 1

Copyright © BergerABAM. All Rights Reserved.

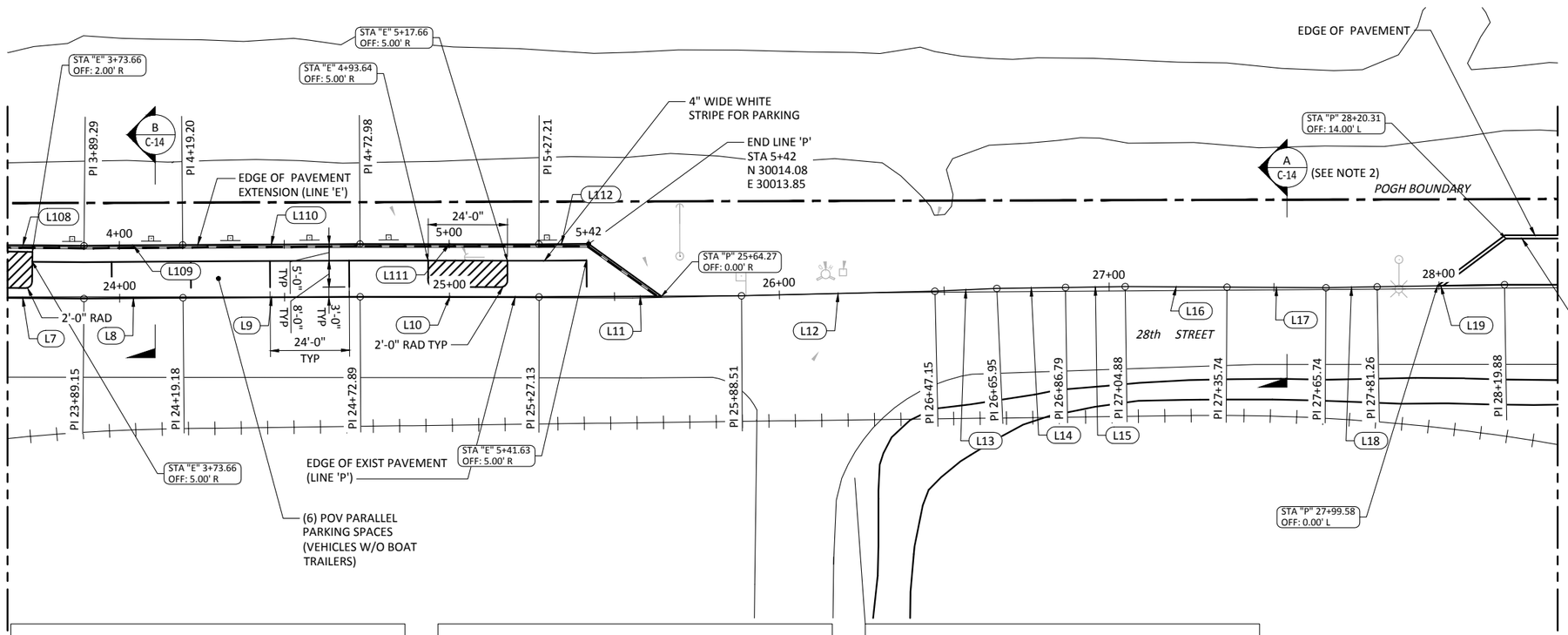

NOTES:

1. SEE DRAWING C-5 FOR NOTES.
2. SECTION 'A' SHOWN ON DWG C-14 APPLIES TO WORK NORTH OF P-LINE STA 28+00. SECTION 'B' SHOWN ON DWG C-14 APPLIES TO WORK SOUTH OF P-LINE STA 25+64.

MATCH LINE SEE DWG C-5

MATCH LINE SEE DWG C-7

"P" LINE

NUMBER	LENGTH	BEARING	POINTS
L7	37.14	N0° 33' 54"E	START = N:19342.04, E:30030.26 END = N:19379.17, E:30030.63
L8	30.03	N0° 27' 37"W	START = N:19379.17, E:30030.63 END = N:19409.20, E:30030.39
L9	53.70	N0° 18' 51"W	START = N:19409.20, E:30030.39 END = N:19462.90, E:30030.09
L10	54.24	N0° 05' 02"E	START = N:19462.90, E:30030.09 END = N:19517.14, E:30030.17
L11	61.38	N0° 21' 40"W	START = N:19517.14, E:30030.17 END = N:19578.52, E:30029.78
L12	58.64	N1° 20' 40"W	START = N:19578.52, E:30029.78 END = N:19637.15, E:30028.41
L13	18.80	N2° 34' 45"W	START = N:19637.15, E:30028.41 END = N:19655.93, E:30027.56
L14	20.84	N0° 48' 46"W	START = N:19655.93, E:30027.56 END = N:19676.77, E:30027.27
L15	18.09	N0° 48' 46"W	START = N:19676.77, E:30027.27 END = N:19694.86, E:30027.01
L16	30.86	N0° 18' 55"E	START = N:19694.86, E:30027.01 END = N:19725.71, E:30027.18

"P" LINE

NUMBER	LENGTH	BEARING	POINTS
L17	30.00	N0° 18' 55"E	START = N:19725.71, E:30027.18 END = N:19755.72, E:30027.34
L18	15.52	N0° 58' 28"W	START = N:19755.72, E:30027.34 END = N:19771.23, E:30027.08
L19	38.62	N0° 58' 28"W	START = N:19771.23, E:30027.08 END = N:19809.84, E:30026.42

"E" LINE

NUMBER	LENGTH	BEARING	POINTS
L108	37.05	N0° 33' 54"E	START = N:19342.13, E:30014.26 END = N:19379.18, E:30014.63
L109	29.91	N0° 27' 37"W	START = N:19379.18, E:30014.63 END = N:19409.09, E:30014.39
L110	53.78	N0° 18' 51"W	START = N:19409.09, E:30014.39 END = N:19462.87, E:30014.09
L111	54.24	N0° 05' 02"E	START = N:19462.87, E:30014.09 END = N:19517.11, E:30014.17
L112	15.06	N0° 21' 40"W	START = N:19517.11, E:30014.17 END = N:19532.17, E:30014.08

SITE LAYOUT

SCALE: 1"=20'-0"

1" = 20' 20 0 20 40
scale feet

BID DOCUMENTS

MARK	REVISION DESCRIPTION	BY	APP.	DATE

BergerABAM
33301 9th Avenue South, Suite 300
Federal Way, Washington 98003-2600
(206) 431-2300 Fax: (206) 431-2250

SCOTT BRANLUND
STATE OF WASHINGTON
PROFESSIONAL ENGINEER

DRAWN BY MDB
DESIGN BY VHN
CHECK BY CSB
PROJ MGR CSB

PORT OF GRAYS HARBOR
28TH STREET BOAT LAUNCH IMPROVEMENTS
CONSTRUCTION PHASE II

SITE LAYOUT - SHEET 2

DRAWING NO. C-6
PROJECT NO. FAWAT-12-145
DATE: 10/30/17
SHEET NO. 13 OF 48

Last Saved by: Garth.nelson on: Jul 27, 2017 3:01 PM File: Q:\FederalWay\2012\FAWAT-12-145\CADD\Dwgs\Phase_II\P22_C06.dwg
Last Saved on Tue Aug 16 2005 at 10:03AM by Jacob File Name: O:\2006\FAWAT-06-001\CADD\dwgs\C-1.dwg Scale: 1

Copyright © BergerABAM. All Rights Reserved.

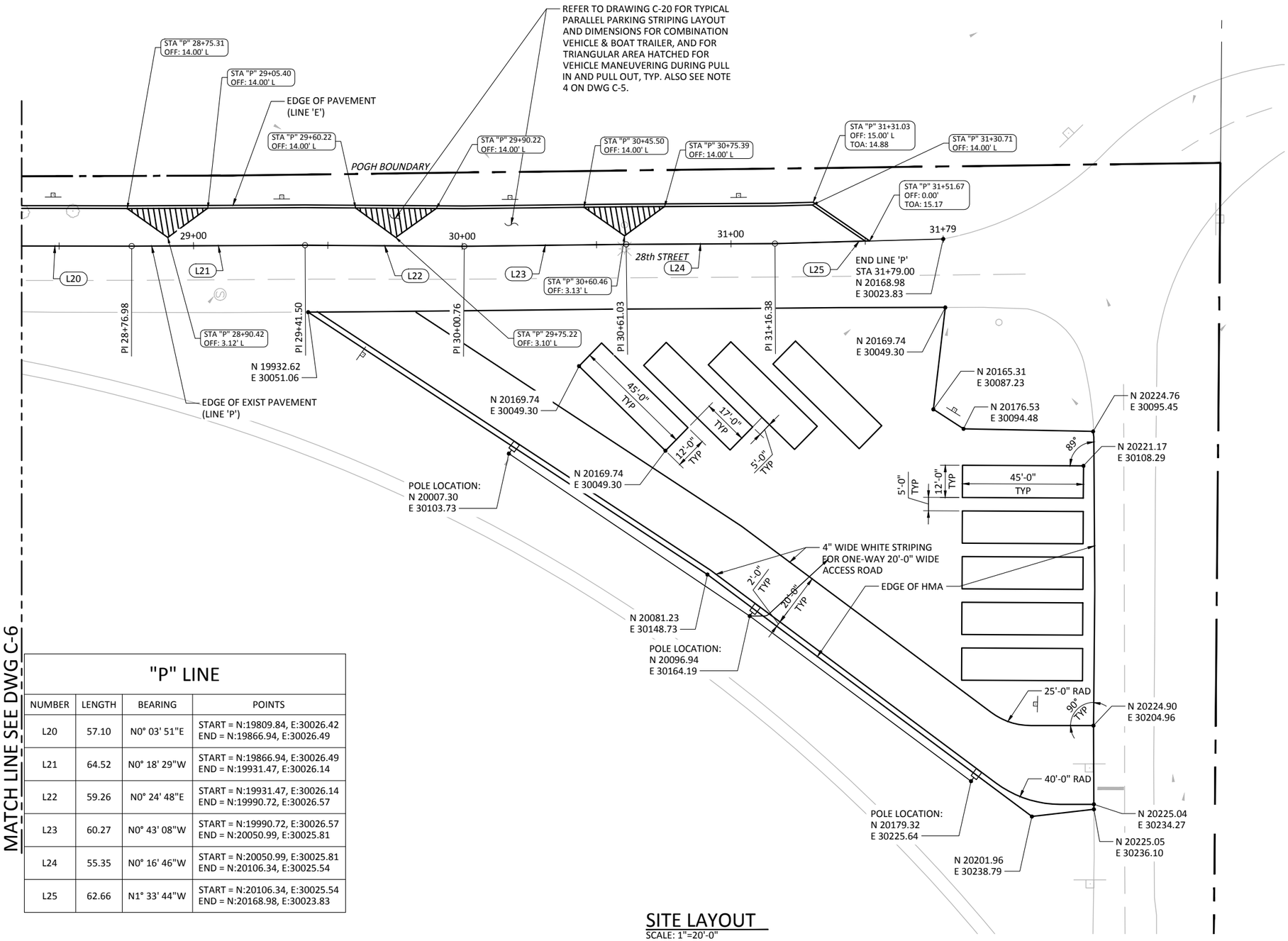

SITE LAYOUT

SCALE: 1"=20'-0"

NOTES:

1. SEE DRAWING C-5 FOR NOTES.

MATCH LINE SEE DWG C-6

"P" LINE			
NUMBER	LENGTH	BEARING	POINTS
L20	57.10	N0° 03' 51"E	START = N:19809.84, E:30026.42 END = N:19866.94, E:30026.49
L21	64.52	N0° 18' 29"W	START = N:19866.94, E:30026.49 END = N:19931.47, E:30026.14
L22	59.26	N0° 24' 48"E	START = N:19931.47, E:30026.14 END = N:19990.72, E:30026.57
L23	60.27	N0° 43' 08"W	START = N:19990.72, E:30026.57 END = N:20050.99, E:30025.81
L24	55.35	N0° 16' 46"W	START = N:20050.99, E:30025.81 END = N:20106.34, E:30025.54
L25	62.66	N1° 33' 44"W	START = N:20106.34, E:30025.54 END = N:20168.98, E:30023.83

1" = 20' scale 20 0 20 40 feet

BID DOCUMENTS

MARK	REVISION DESCRIPTION	BY	APP.	DATE

BergerABAM
33301 9th Avenue South, Suite 300
Federal Way, Washington 98003-2600
(206) 431-2300 Fax: (206) 431-2250

SCOTT BRANLUND STATE OF WASHINGTON REGISTERED PROFESSIONAL ENGINEER

DRAWN BY MDB
DESIGN BY VHN
CHECK BY CSB
PROJ MGR CSB

PORT OF GRAYS HARBOR
28TH STREET BOAT LAUNCH IMPROVEMENTS
CONSTRUCTION PHASE II

SITE LAYOUT - SHEET 3

DRAWING NO. C-7
PROJECT NO. FAWAT-12-145
DATE: 10/30/17
SHEET NO. 14 OF 48

Last Saved by: Garth.nelson. on: Jul 27, 2017 4:05 PM File: Q:\FederalWay\2012\FAWAT-12-145\CADD\Dwgs\Phase_II\P22_C07.dwg

Last Saved on Tue Aug 16 2005 at 10:03AM by Jacob File Name: O:\2006\FAWAT-06-001\CADD\dwgs\C-1.dwg Scale: 1

Copyright © BergerABAM. All Rights Reserved.

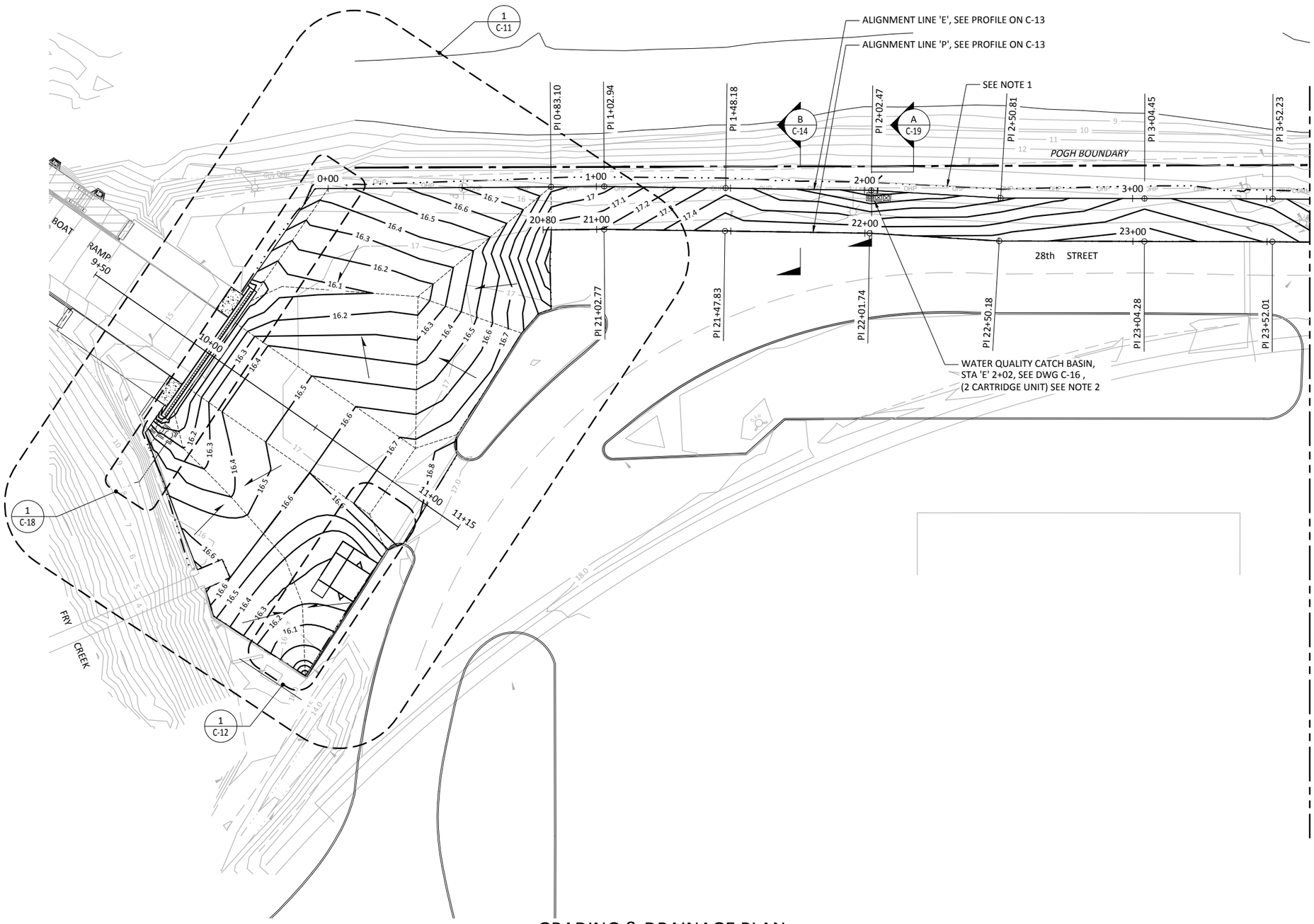

GRADING & DRAINAGE PLAN

SCALE: 1"=20'-0"

NOTES:

1. EXISTING CONTOURS ARE SHOWN EVERY 1'-0". CONTOUS IN DEVELOPED AREAS ARE SHOWN EVERY 0.20' TO CLARIFY GRADING IN RELATIVELY FLAT AREAS. TIGHTLY SPACED 0.20' CONTOURS ARE NOT SHOWN FOR FILL SLOPE WEST OF HMA PAVEMENT EDGE ALONG 28TH STREET, BUT TOE OF FILL SLOPE LOCATION IS SHOWN BY PHANTOM LINE.
2. GRATING OF WQCB SHALL BE AT LOW POINT OF PROFILE.

MATCH LINE SEE DWG C-9

LEGEND

- - - - - - - -	GRADE BREAK LINES, VALLEY LINES, RIDGE LINES
(16.78)	REFERENCE ELEVATION (EXISTING FEATURES)
16.12	FINISH GRADE
—— · · · ——	TOE OF FILL SLOPE (GRADING BOUNDARY FOR FILL AREAS)
——15.3——	FINISH GRADE CONTOUR LINES (0.1 INTERVALS)
——10——	EXIST GRADE CONTOUR LINES (1.0 INTERVALS)

1" = 20' 20 0 20 40 scale feet

BID DOCUMENTS

MARK	REVISION DESCRIPTION	BY	APP.	DATE

BergerABAM
33301 9th Avenue South, Suite 300
Federal Way, Washington 98003-2600
(206) 431-2300 Fax: (206) 431-2250

SCOTT BRANLUND STATE OF WASHINGTON REGISTERED PROFESSIONAL ENGINEER

DRAWN BY MDB
DESIGN BY VHN
CHECK BY CSB
PROJ MGR CSB

PORT OF GRAYS HARBOR
28TH STREET BOAT LAUNCH IMPROVEMENTS
CONSTRUCTION PHASE II

GRADING & DRAINAGE PLAN - SHEET 1

DRAWING NO. C-8
PROJECT NO. FAWAT-12-145
DATE: 10/30/17
SHEET NO. 15 OF 48

Last Saved by: Garth.nelson. on: Jul 27, 2017 3:01 PM File: Q:\FederalWay\2012\FAWAT-12-145\CADD\Dwgs\Phase_II\P22_C08.dwg

Last Saved on Tue Aug 16 2005 at 10:03AM by Jacob File Name: O:\2006\FAWAT-06-001\CADD\dwgs\C-1.dwg Scale: 1

Copyright © BergerABAM. All Rights Reserved.

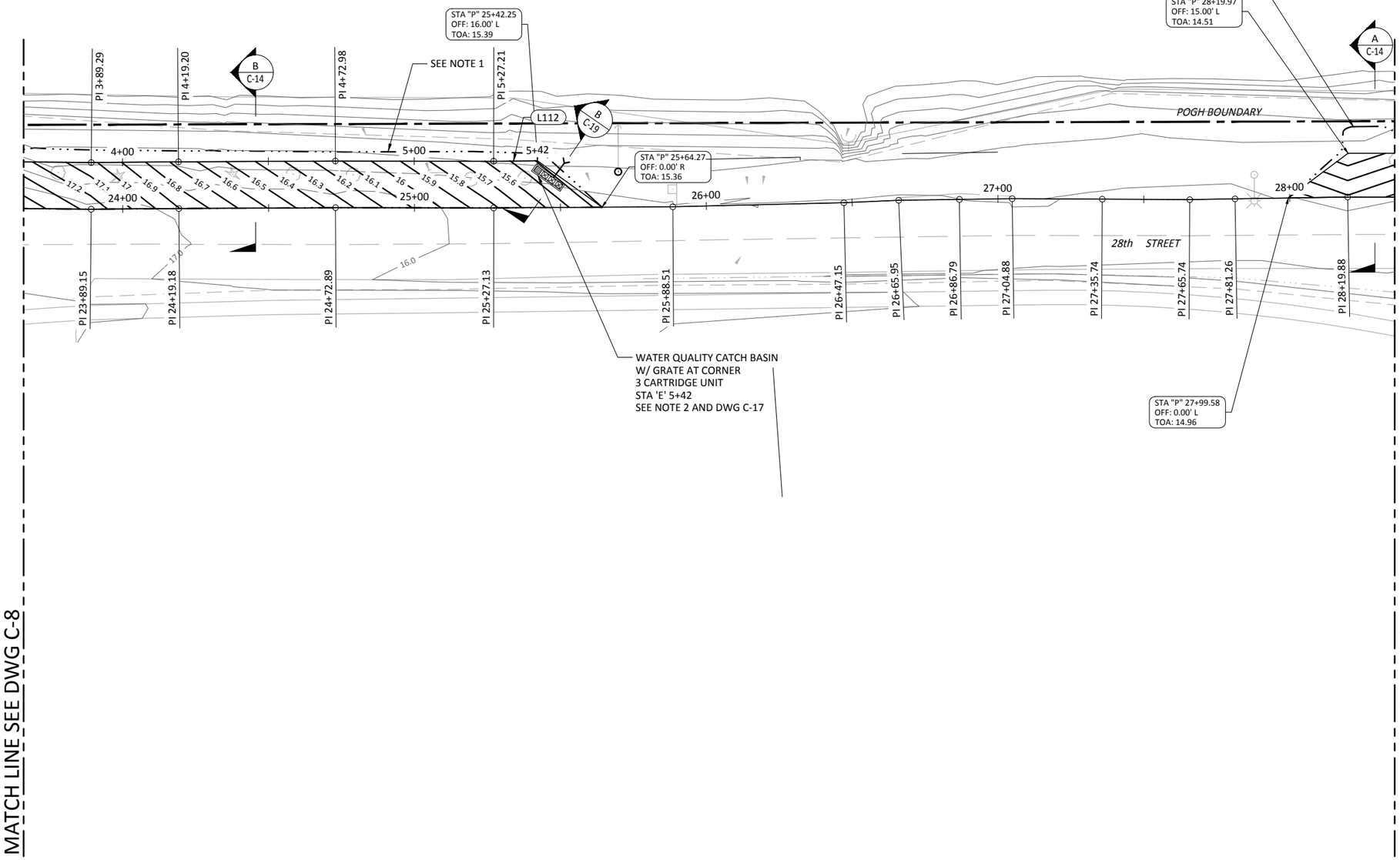

NOTES:

1. EXISTING CONTOURS ARE SHOWN EVERY 1'-0". CONTOURS IN DEVELOPED AREAS ARE SHOWN EVERY 0.20' TO CLARIFY GRADING IN REATIVELY FLAT AREAS. TIGHTLY SPACED 0.20' CONTOURS ARE NOT SHOWN FOR FILL SLOPE WEST OF HMA PAVEMENT EDGE ALONG 28TH STREET, BUT TOE OF FILL SLOPE LOCATION IS SHOWN BY PHANTOM LINE.
2. GRATE OF WQCB SHALL BE LOCATED AT CORNER OF EXTRUDED CURB. THE STATION IS AT THE CORNER OF THE EXTRUDED CURB AND THE LOW POINT OF HMA.

LEGEND

- - - - - - - - - - - - - -	GRADE BREAK LINES, VALLEY LINES, RIDGE LINES
(16.78)	REFERENCE ELEVATION (EXISTING FEATURES)
16.12	FINISH GRADE
—— · · · ——	TOE OF FILL SLOPE (GRADING BOUNDARY FOR FILL AREAS)

GRADING & DRAINAGE PLAN

SCALE: 1"=20'-0"

1" = 20' 20 0 20 40 scale feet

BID DOCUMENTS

MARK	REVISION DESCRIPTION	BY	APP.	DATE

BergerABAM
33301 9th Avenue South, Suite 300
Federal Way, Washington 98003-2600
(206) 431-2300 Fax: (206) 431-2250

SCOTT BRANLUND STATE OF WASHINGTON REGISTERED PROFESSIONAL ENGINEER

DRAWN BY MDB
DESIGN BY VHN
CHECK BY CSB
PROJ MGR CSB

PORT OF GRAYS HARBOR
28TH STREET BOAT LAUNCH IMPROVEMENTS
CONSTRUCTION PHASE II

GRADING & DRAINAGE PLAN - SHEET 2

DRAWING NO. C-9
PROJECT NO. FAWAT-12-145
DATE: 10/30/17
SHEET NO. 16 OF 48

Last Saved by: Garth.nelson on: Jul 27, 2017 3:01 PM File: Q:\FederalWay\2012\FAWAT-12-145\CADD\Dwgs\Phase_II\P22_C09.dwg

Last Saved on Tue Aug 16 2005 at 10:03AM by Jacob File Name: O:\2006\FAWAT-06-001\CADD\dwgs\C-1.dwg Scale: 1

Copyright © BergerABAM. All Rights Reserved.

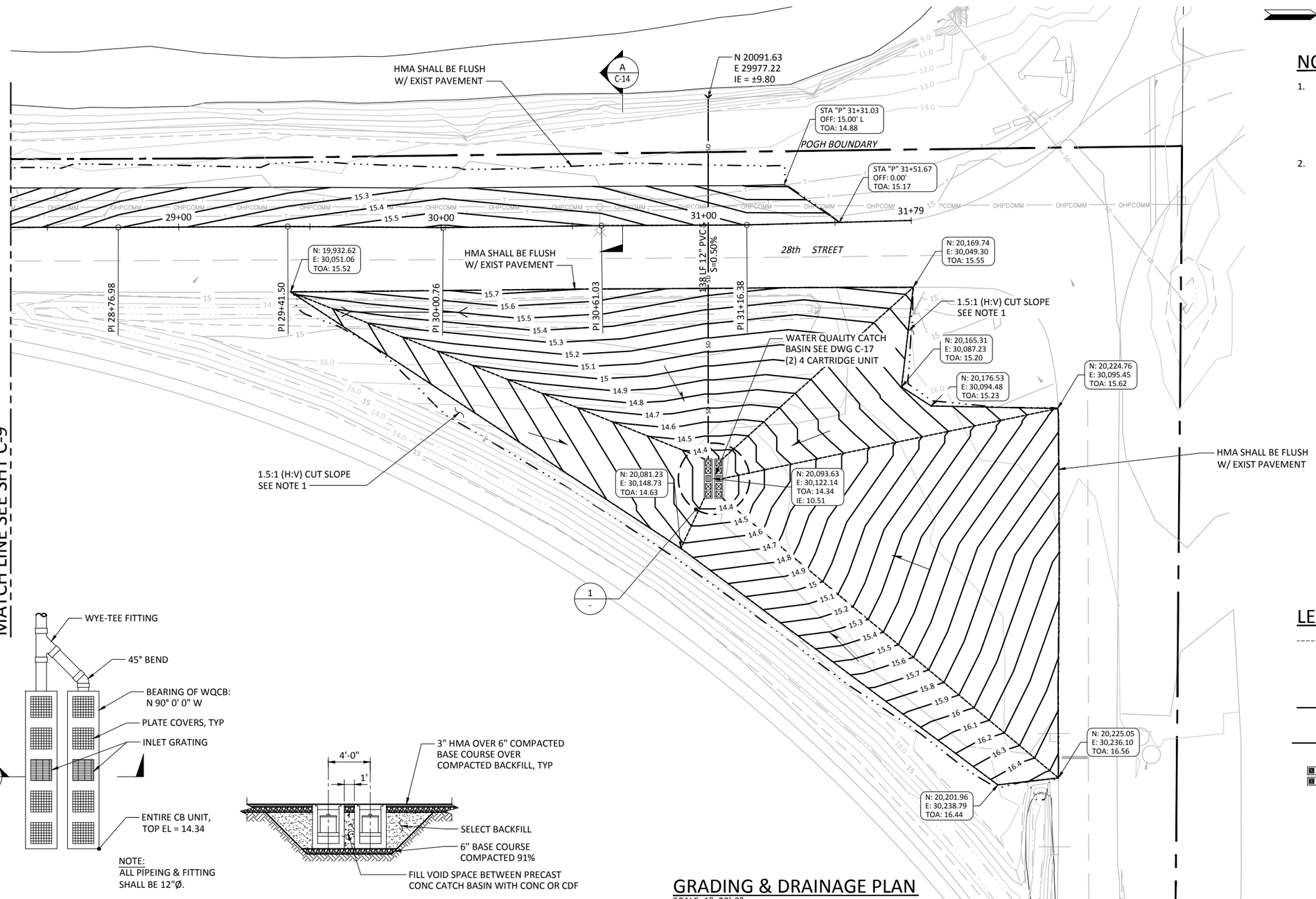

NOTES:

1. EXISTING CONTOURS ARE SHOWN EVERY 1'-0". CONTOURS IN DEVELOPED AREAS ARE SHOWN EVERY 0.20' TO CLARIFY GRADING IN RELATIVELY FLAT AREAS. TIGHTLY SPACED 0.20' CONTOURS ARE NOT SHOWN FOR FILL SLOPE WEST OF HMA PAVEMENT EDGE ALONG 28TH STREET, BUT TOE OF FILL SLOPE LOCATION IS SHOWN BY PHANTOM LINE.
2. WATER QUALITY CATCH BASINS SHALL EACH HAVE (4) 18" TALL CARTRIDGES.

LEGEND

- - - - - - - -	GRADE BREAK LINES, VALLEY LINES, RIDGE LINES
(16.78)	REFERENCE ELEVATION (EXISTING FEATURES)
16.12	FINISH GRADE
—— · · · ——	TOE OF FILL SLOPE (GRADING BOUNDARY FOR FILL AREAS)
—— SD ——	STORM DRAINAGE PIPING
	WATER QUALITY CATCH BASIN

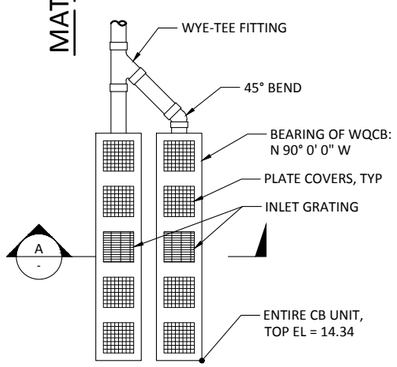

1 DETAIL - WQCB
SCALE: NTS

A SECTION - WQCB
SCALE: NTS

GRADING & DRAINAGE PLAN
SCALE: 1"=20'-0"

1" = 20' 20 0 20 40
scale feet

BID DOCUMENTS

MARK	REVISION DESCRIPTION	BY	APP.	DATE

BergerABAM
33301 9th Avenue South, Suite 300
Federal Way, Washington 98003-2600
(206) 431-2300 Fax: (206) 431-2250

SCOTT BRANLUND STATE OF WASHINGTON REGISTERED PROFESSIONAL ENGINEER

DRAWN BY MDB
DESIGN BY VHN
CHECK BY CSB
PROJ MGR CSB

PORT OF GRAYS HARBOR
28TH STREET BOAT LAUNCH IMPROVEMENTS
CONSTRUCTION PHASE II

GRADING & DRAINAGE PLAN - SHEET 3

DRAWING NO. C-10
PROJECT NO. FAWAT-12-145
DATE: 10/30/17
SHEET NO. 17 OF 48

Last Saved by: Garth.nelson on: Jul 27, 2017 3:02 PM File: Q:\FederalWay\2012\FAWAT-12-145\CADD\Dwgs\Phase_II\P22_C10.dwg
Last Saved on Tue Aug 16 2005 at 10:03AM by Jacob File Name: O:\2006\FAWAT-06-001\CADD\dwgs\C-1.dwg Scale: 1

Copyright © BergerABAM. All Rights Reserved.

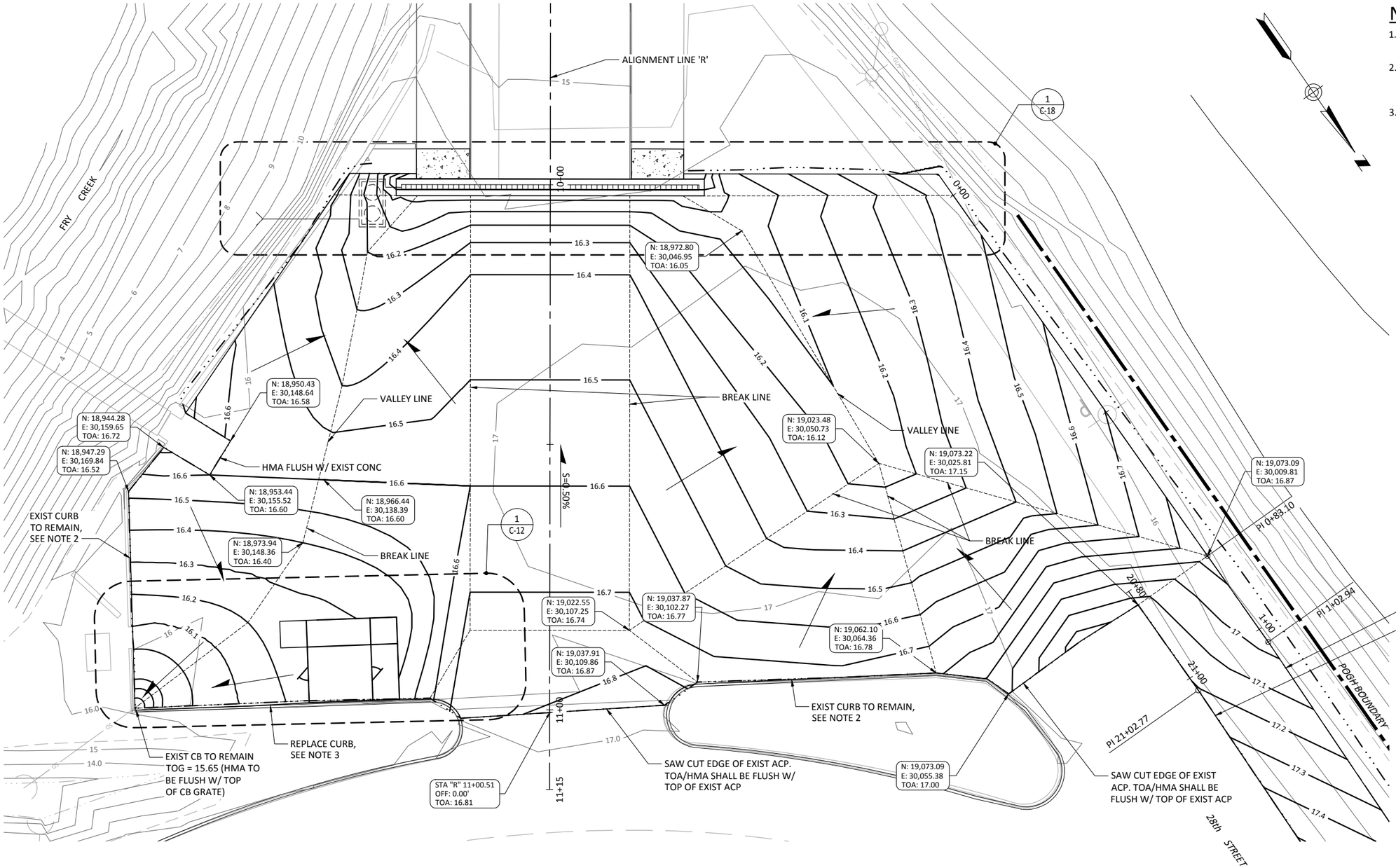

NOTES:

1. CONTRACTOR SHALL HOLD BREAK LINES & SPOT ELEVATIONS SHOWN ON PLAN TO DEVELOP INTENDED GRADING LAYOUT.
2. TOA SHALL MATCH EXIST GRADE AT EXISTING CURB LINES & BE PLACED UP TO FACE OF EXIST CURB. MIN CURB HEIGHT AFTER PLACEMENT OF HMA SHALL BE 4".
3. SAW-CUT AND REMOVE EXISTING CONCRETE CURB BEGINNING FROM WEST SIDE OF RAISED WALKWAY TO WEST SIDE OF EXISTING CATCH-BASIN. REPLACEMENT CONCRETE CURB SHALL IN ACCORDANCE WITH WSDOT STD PLAN F-10.12-03, "CEMENT CONCRETE TRAFFIC CURB". WITH TOP OF CURB 6" ABOVE FINISH GRADE FOR ASPHALT PAVEMENT AS SHOWN ON GRADING PLAN. THERE SHALL BE NO GAP BETWEEN CIP CONCRETE CURB AROUND WALKWAY AND SAW-CUT EXISTING CURB.

1 / C-5,C-8 ENLARGED GRADING & DRAINAGE PLAN
SCALE: 1"=10'-0"

1" = 10' 10 0 10 20 scale feet

BID DOCUMENTS

MARK	REVISION DESCRIPTION	BY	APP.	DATE

BergerABAM
33301 9th Avenue South, Suite 300
Federal Way, Washington 98003-2600
(206) 431-2300 Fax: (206) 431-2250

SCOTT BRANLUND STATE OF WASHINGTON REGISTERED PROFESSIONAL ENGINEER

DRAWN BY MDB
DESIGN BY VHN
CHECK BY CSB
PROJ MGR CSB

PORT OF GRAYS HARBOR
28TH STREET BOAT LAUNCH IMPROVEMENTS
CONSTRUCTION PHASE II

ENLARGED GRADING & DRAINAGE PLAN

DRAWING NO. C-11
PROJECT NO. FAWAT-12-145
DATE: 10/30/17
SHEET NO. 18 OF 48

Last Saved by: Garth.nelson on: Jul 27, 2017 3:02 PM File: Q:\FederalWay\2012\FAWAT-12-145\CADD\Dwgs\Phase_II\P22_C11.dwg

Last Saved on Tue Aug 16 2005 at 10:03AM by Jacob File Name: O:\[2006]\FAWAT-06-001\CADD\dwgs\C-1.dwg Scale: 1

Copyright © BergerABAM. All Rights Reserved.

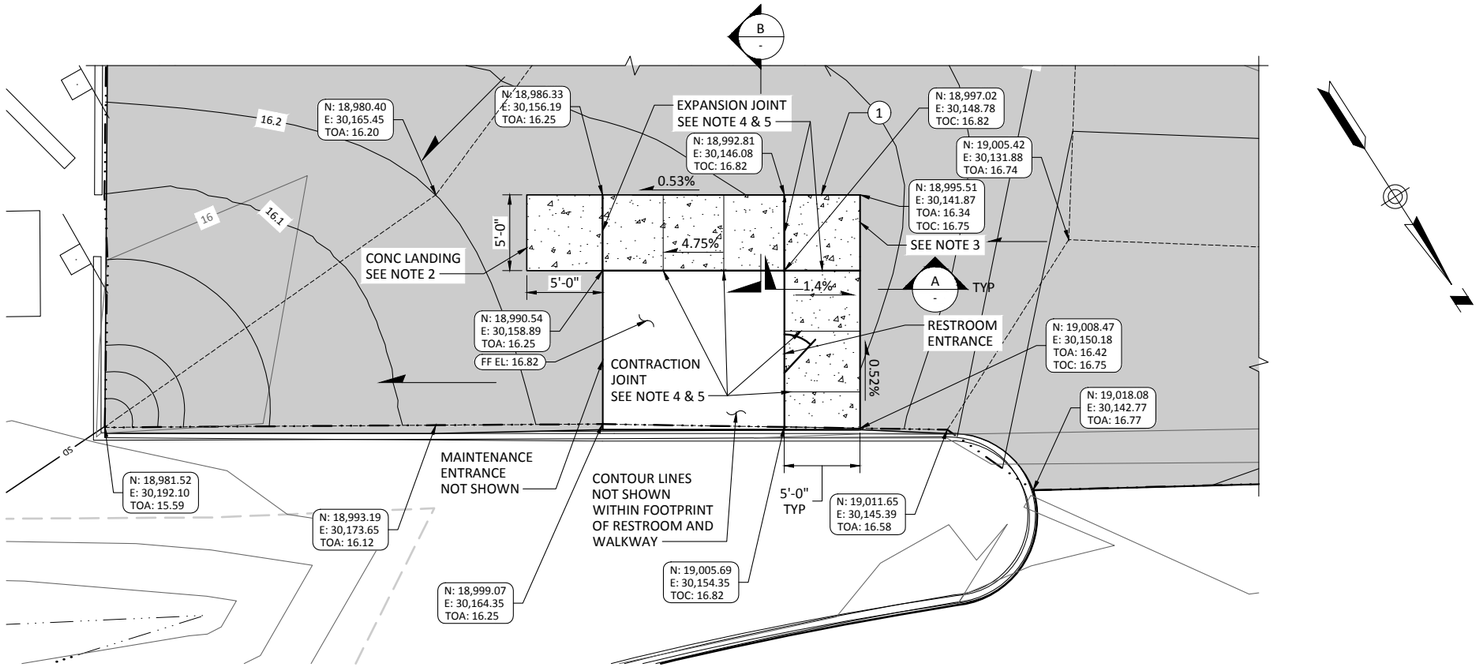

ENLARGED RESTROOM GRADING & DRAINAGE PLAN

SCALE: 1"=5'-0"

NOTES:

1. INFORMATION ON THIS DWG BASED ON BUILDING SHOWN ON DWG C-25. CONTACT ENGINEER IF BUILDING CHANGES.
2. CONCRETE LANDING AT BASE OF INCLINED WALKWAY SHALL BE 5'-0" SQ X 6" THK, WITH REINFORCING SAME AS SHOWN FOR WALKWAY ON SECTION 'A' & 'B' ON C-12. TOP OF LANDING SHALL BE FLUSH WITH FINISH GRADE OF SURROUNDING ASPHALT PAVEMENT. SLOPE OF LANDING SHALL BE CONSISTENT WITH FINISH GRADING PLAN, BUT IN NO CASE SHALL IT BE SLOPED GREATER THAN 1.5% IN ANY DIRECTION. INSTALL 3/8" PREMOLDED JOINT FILLER BETWEEN LANDING AND INCLINED WALKWAY.
3. HEIGHT OF CURB FOR SOUTHERLY INCLINED WALKWAY (SLOPE = 4.75%) VARIES BETWEEN 6" AND FLUSH WITH ASPHALT PAVEMENT. REFER TO GRADING PLAN FOR ELEVATIONS. WESTERLY WALKWAY ON SIDE WITH DOOR TO RESTROOM HAS TRANSVERSE CROSS-SLOPE OF S = 1.40% FOR DRAINAGE AND SHALL BE FLUSH WITH RESTROOM FINISH FLOOR.
4. WALKWAYS SHALL BE JOINTED AND FINISHED SIM TO ISOMETRIC VIEW ON WSDOT STD PLAN F-30.10-03, EXCEPT CONTRACTION JOINT SPACING SHALL BE EQUALLY SPACED WITH A 4'-0" MAXIMUM DISTANCE BETWEEN. PLACE EXPANSION JOINTS AT 5' X 5' TURNING POINT AND AT THE 5' X 5' LANDING AS SHOWN ON DRAWING. TURNING POINT AND LANDING DO NOT REQUIRE ADDITIONAL JOINTING. EXPANSION JOINTS SHALL BE FULL DEPTH USING 3/8" PREMOLDED JOINT FILLER.
5. EXPANSION JOINT SHALL BE IN ACCORDANCE W/ WSDOT STD PLAN F-30.10-03, DETAIL 'E'. CONTRACTION JOINT SHALL BE IN ACCORDANCE WITH WSDOT STD PLAN F-30.10-03, DETAIL 'C', EXCEPT DEPTH OF JOINT SHALL BE 1-1/2" MIN.

KEY NOTES:

(1) CONCRETE WALK AROUND BUILDING.

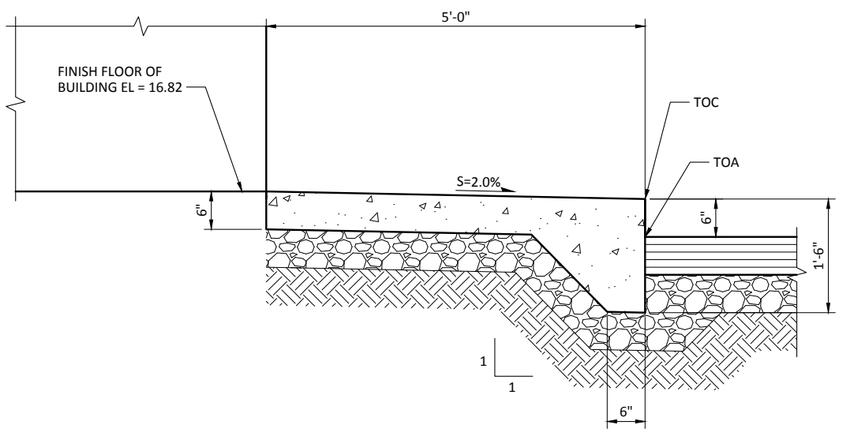

A SECTION
SCALE: NTS

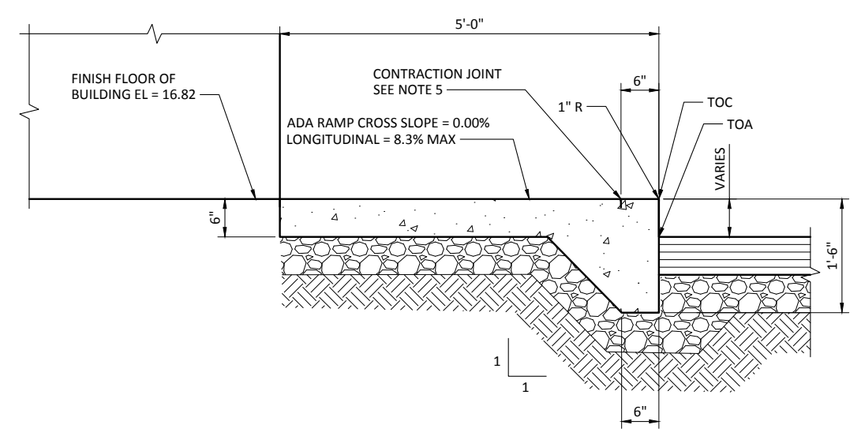

B SECTION
SCALE: NTS

1" = 20' scale — 20 0 20 40 feet

BID DOCUMENTS

MARK	REVISION DESCRIPTION	BY	APP.	DATE

BergerABAM
33301 9th Avenue South, Suite 300
Federal Way, Washington 98003-2600
(206) 431-2300 Fax: (206) 431-2250

SCOTT BRANLUND — STATE OF WASHINGTON — REGISTERED PROFESSIONAL ENGINEER

DRAWN BY MDB
DESIGN BY VHN
CHECK BY CSB
PROJ MGR CSB

PORT OF GRAYS HARBOR
28TH STREET BOAT LAUNCH IMPROVEMENTS
CONSTRUCTION PHASE II

ENLARGED BUILDING GRADING & DRAINAGE PLAN

DRAWING NO. C-12
PROJECT NO. FAWAT-12-145
DATE: 10/30/17
SHEET NO. 19 OF 48

Last Saved by: Garth.nelson on: Jul 27, 2017 3:02 PM File: Q:\FederalWay\2012\FAWAT-12-145\CADD\Dwgs\Phase_II\P22_C12.dwg

Last Saved on Tue Aug 16 2005 at 10:03AM by Jacob File Name: O:\2006\FAWAT-06-001\CADD\dwgs\C-1.dwg Scale: 1

Copyright © BergerABAM. All Rights Reserved.

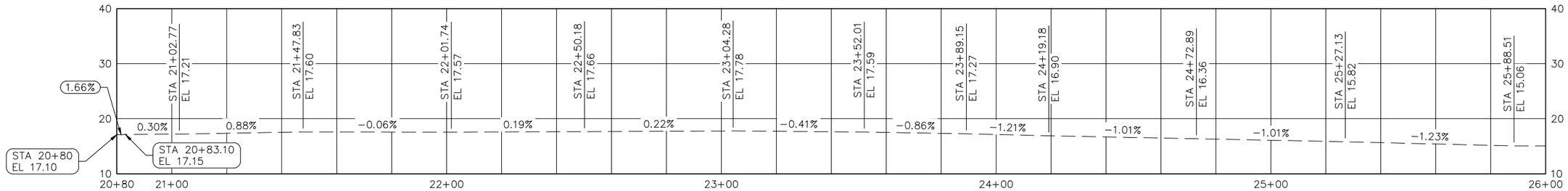

PROFILE - P LINE (EDGE OF EXISTING ACP)

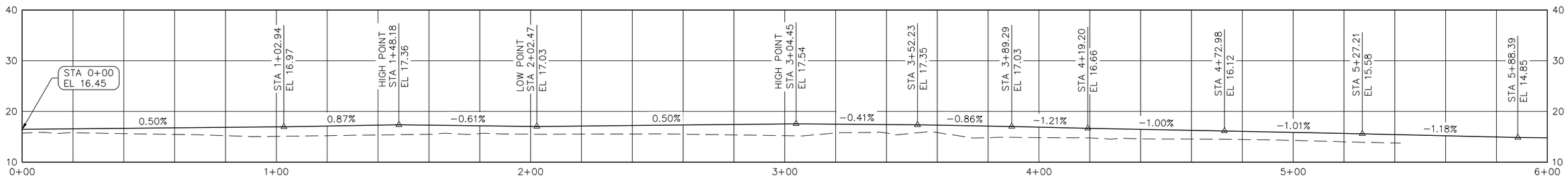

PROFILE - E LINE (EDGE OF HMA PAVING)

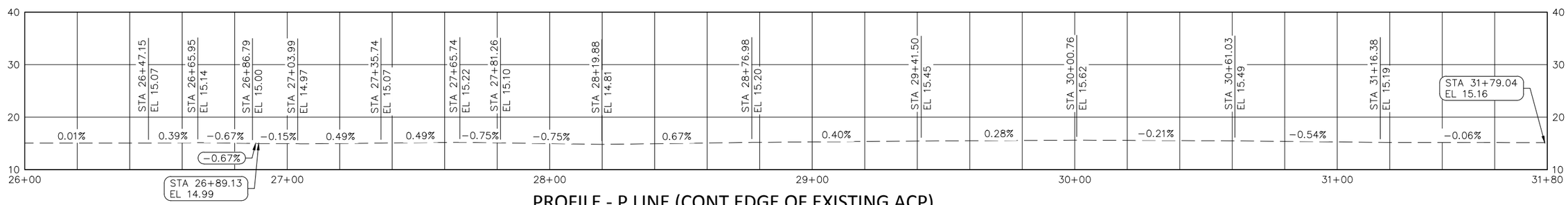

PROFILE - P LINE (CONT EDGE OF EXISTING ACP)

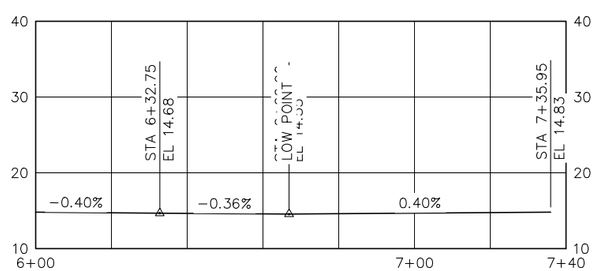

PROFILE - E LINE (CONT EDGE OF HMA PAVING)

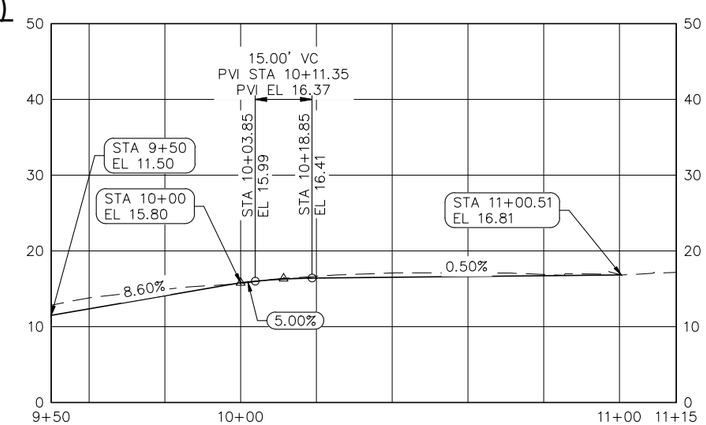

PROFILE - R LINE

BID DOCUMENTS

MARK	REVISION DESCRIPTION	BY	APP.	DATE

BergerABAM
33301 9th Avenue South, Suite 300
Federal Way, Washington 98003-2600
(206) 431-2300 Fax: (206) 431-2250

SCOTT BRANLUND STATE OF WASHINGTON REGISTERED PROFESSIONAL ENGINEER
Sign & Seal
OCT 13 2017

DRAWN BY MDB
DESIGN BY VHN
CHECK BY CSB
PROJ MGR CSB

PORT OF GRAYS HARBOR
28TH STREET BOAT LAUNCH IMPROVEMENTS
CONSTRUCTION PHASE II

GRADING & DRAINAGE PROFILES & SECTIONS

DRAWING NO. C-13
PROJECT NO. FAWAT-12-145
DATE: 10/30/17
SHEET NO. 20 OF 48

Last Saved by: Garth.nelson on: Jul27, 2017 3:02 PM File: Q:\FederalWay\2012\FAWAT-12-145\CAD\Dwgs\Phase_II\P22_C13.dwg

Last Saved on Tue Aug 16 2005 at 10:03AM by Jacob File Name: O:\2006\FAWAT-06-001\CADD\dwgs\C-1.dwg Scale: 1

Copyright © BergerABAM. All Rights Reserved.

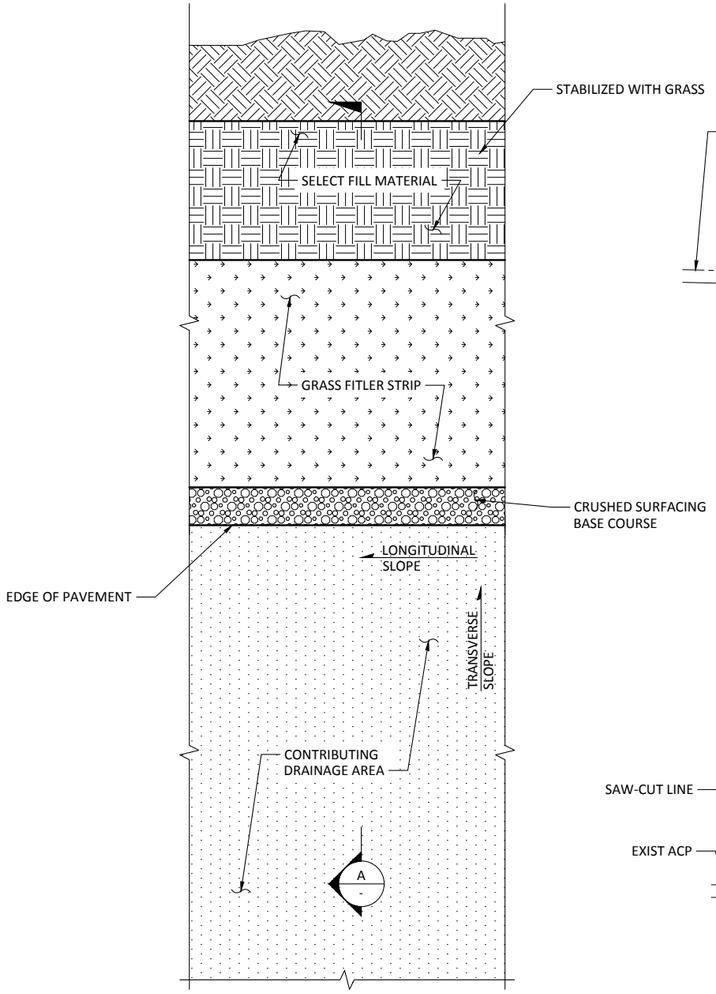

1 - PLAN VIEW
NTS

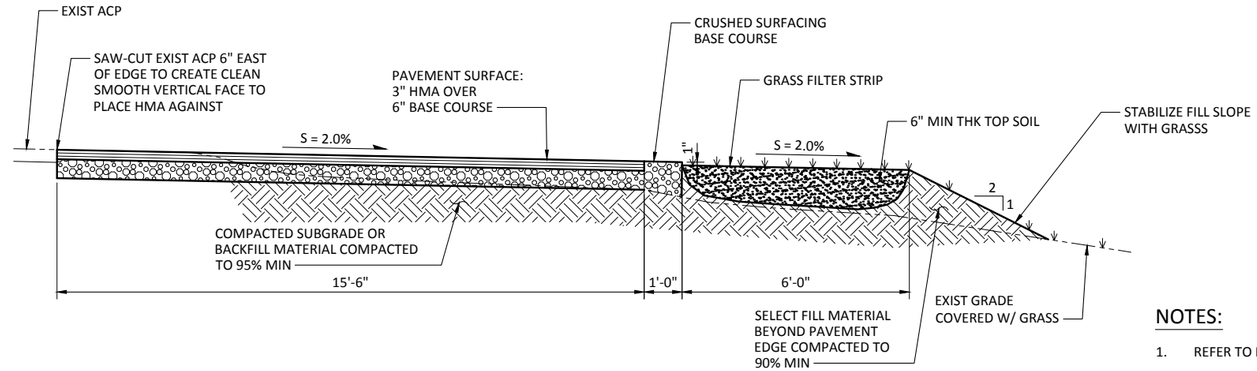

A C-6 C-7 C-9 C-10 TYPICAL FILTER STRIP DETAIL
NTS

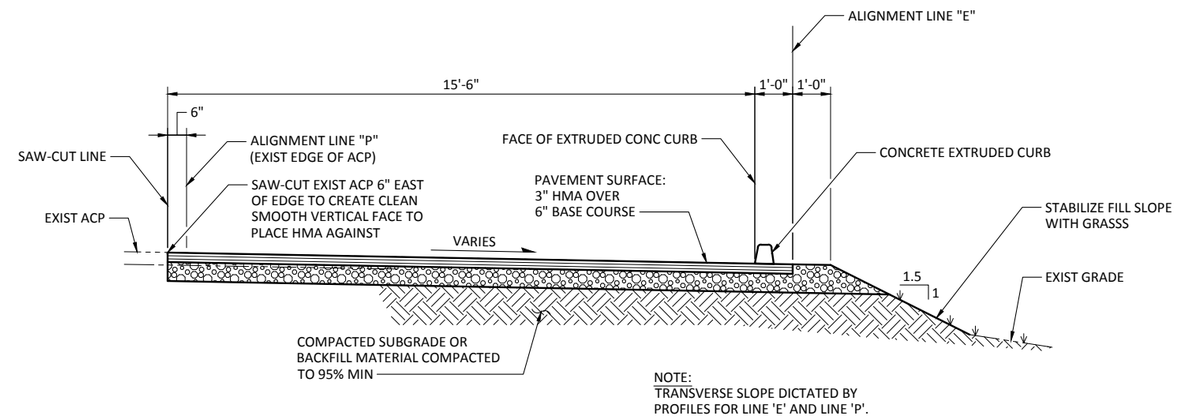

B C-5 C-6 C-8 C-9 TYPICAL SECTION - PAVEMENT EXTENSION W/ CURB
NTS

NOTES:

1. REFER TO NOTE 4 ON DWG C-5.
2. FOR SECTIONS 'A' AND 'B', EXCAVATE, OR FILL AND COMPACT AS REQUIRED TO ACHIEVE THE SPECIFIED PAVEMENT SECTION AND REQUIRED GRADES.
3. FOR PAVEMENT EXTENSION ALONG 28TH STREET AT NORTH END OF PROJECT, REFER TO SECTION 'A'. FINISH GRADE SHALL BE SLOPED AS SHOWN ON SECTION 'A' FROM EDGE OF EXIST PAVEMENT. FOR PAVEMENT EXTENSION ALONG 28TH AT SOUTH END OF PROJECT, REFER TO SECTION 'B'. FINISH GRADE SHALL BE DEVELOPED BY UNIFORM TRANSVERSE SLOPE BETWEEN E-LINE AND P-LINE PROFILES, WITH PAVEMENT SLOPED AWAY FROM EXIST ROADWAY TO CURB LINE. IF CONTRACTOR DETERMINES ANY LOCATION THAT WILL NOT RESULT IN A SLOPE DOWN TOWARDS THE CURB LINE, STOP WORK AND CONTACT ENGINEER FOR FURTHER DIRECTION.
4. SECTION 'B' IS SHOWN WILL A FILL SLOPE OF 1.5:1 (H:V), BUT CONTRACTOR SHALL USE 2:1 (H:V) FILL SLOPE WHERE ADEQUATE SPACE IS AVAILABLE TO CATCH EXISTING GRADE PRIOR TO STEEP SLOPE TO EXIST LARGE DITCH / WATERWAY.

BID DOCUMENTS

MARK	REVISION DESCRIPTION	BY	APP.	DATE

BergerABAM
33301 9th Avenue South, Suite 300
Federal Way, Washington 98003-2600
(206) 431-2300 Fax: (206) 431-2250

SCOTT BRANDLAND STATE OF WASHINGTON REGISTERED PROFESSIONAL ENGINEER

DRAWN BY MDB
DESIGN BY VHN
CHECK BY CSB
PROJ MGR CSB

PORT OF GRAYS HARBOR
28TH STREET BOAT LAUNCH IMPROVEMENTS
CONSTRUCTION PHASE II

GRADING & DRAINAGE DETAILS - SHEET 1

DRAWING NO. C-14
PROJECT NO. FAWAT-12-145
DATE: 10/30/17
SHEET NO. 21 OF 48

Last Saved by: Garth.nelson on: Jul 27, 2017 3:02 PM File: Q:\FederalWay\2012\FAWAT-12-145\CADD\Dwgs\Phase_II\P22_C14.dwg

Last Saved on Tue Aug 16 2005 at 10:03AM by Jacob File Name: O:\2006\FAWAT-06-001\CADD\dwgs\C-1.dwg Scale: 1

Copyright © BergerABAM. All Rights Reserved.

PF-V-4-WA-0001

Washington GULD*

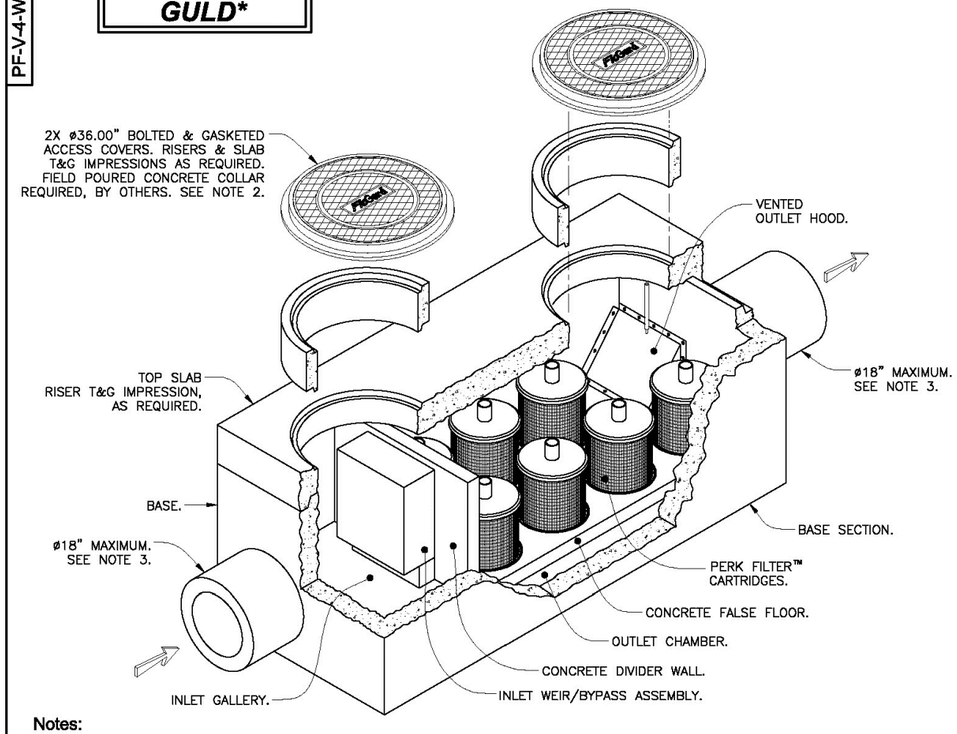

Notes:

1. Precast concrete structure shall be manufactured in accordance with ASTM Designation C857 and C858.
2. Filter system shall be supplied with traffic rated (H20) bolted & gasketed Ø36" circular access covers with risers as required. Shallow applications may require configurations with (H20) bolted & gasketed square/rectangular access hatches. Contact KriStar Enterprises, Inc for engineering assistance. Field poured concrete collars required, by others.
3. Inlet & outlet pipe(s) (Ø 18" maximum) may enter device on all three sides of the inlet & outlet chambers respectively. For pipe sizes greater than Ø 18", contact KriStar Enterprises for engineering assistance.
4. Inlet chamber shall be supplied with drain-down device, designed to remove standing water between storm events.
5. Perk-Filter systems may be supplied with individual or multiple 18" or 12" high Perk-Filter cartridges. Filter cartridge may be stacked to accommodate higher flow rates. Contact KriStar Enterprises for capacities.
6. For depths less than specified minimums contact KriStar Enterprises for engineering assistance.

* **Treatment Flow Rates shown conform to Washington State GULD Specifications.**

TITLE
FloGard® Perk Filter™
4' WIDE CONCRETE VAULT
Washington State GULD
THREE TO SEVEN CARTRIDGES / STACKS

KriStar Enterprises, Inc.
360 Sutton Place, Santa Rosa, CA 95407
Ph: 800.579.8819, Fax: 707.524.8186, www.kristar.com

DRAWING NO.	REV	ECO	DATE	
PF-V-4-WA-0001	C	0108 JPR 11/15/12	JPR 3/2/11	SHEET 1 OF 2

PF-V-4-WA-0001

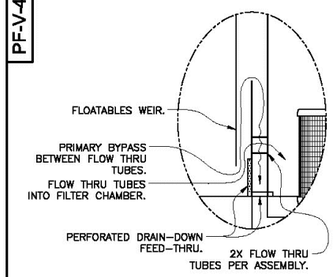

DETAIL A
INLET WEIR/BYPASS ASSEMBLY & DRAIN-DOWN.
SCALE: NONE

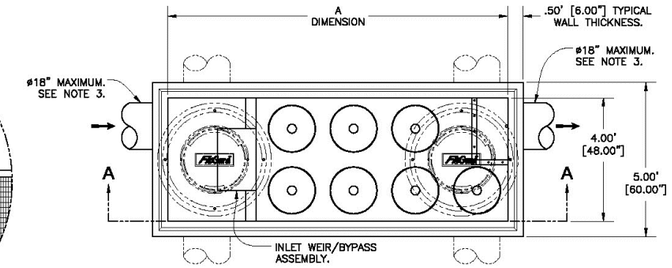

Washington GULD*

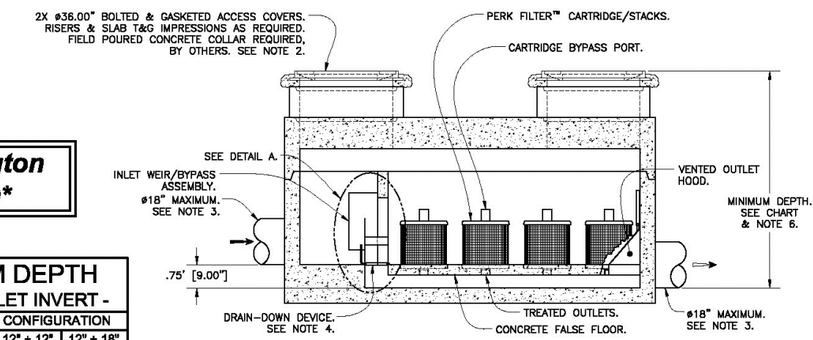

SECTION A-A

MINIMUM DEPTH
- RIM TO OUTLET INVERT -

CARTRIDGE STACK CONFIGURATION			
12"	18"	12" + 12"	12" + 18"
4.25' [51.00"]	5.00' [60.00"]	5.92' [71.00"]	6.67' [80.00"]

4' VAULT
TREATMENT FLOW RATES, TOTAL FLOW CAPACITIES & MAXIMUM HEAD LOSS

CARTRIDGE STACK QUANTITY	A DIMENSION - LENGTH - (ID-FEET)	CARTRIDGE STACK CONFIGURATION							
		12"		18"		12" & 12"		12" & 18"	
		TREATMENT FLOW RATE (GPM / CFS)	TOTAL FLOW CAPACITY (CFS)	TREATMENT FLOW RATE (GPM / CFS)	TOTAL FLOW CAPACITY (CFS)	TREATMENT FLOW RATE (GPM / CFS)	TOTAL FLOW CAPACITY (CFS)	TREATMENT FLOW RATE (GPM / CFS)	TOTAL FLOW CAPACITY (CFS)
3	7	20.4 / 0.045	2.9	30.6 / 0.068	4.3	40.8 / 0.091	5.0	51.0 / 0.114	6.7
4	9	27.2 / 0.061	2.9	40.8 / 0.091	4.4	54.4 / 0.121	5.0	68.0 / 0.152	6.8
5	9	34.0 / 0.076	2.9	51.0 / 0.114	4.4	68.0 / 0.152	5.1	85.0 / 0.190	6.8
6	11	40.8 / 0.091	3.0	61.2 / 0.136	4.5	81.6 / 0.182	5.1	102.0 / 0.227	6.9
7	11	47.6 / 0.106	3.0	71.4 / 0.159	4.5	95.2 / 0.212	5.2	119.0 / 0.265	7.0
MAXIMUM HEAD LOSS		1.7 FEET		2.3 FEET		2.9 FEET		3.5 FEET	

* **Treatment Flow Rates shown conform to Washington State GULD Specifications.**

TITLE
FloGard® Perk Filter™
4' WIDE CONCRETE VAULT
Washington State GULD
THREE TO SEVEN CARTRIDGES / STACKS

KriStar Enterprises, Inc.
360 Sutton Place, Santa Rosa, CA 95407
Ph: 800.579.8819, Fax: 707.524.8186, www.kristar.com

DRAWING NO.	REV	ECO	DATE	
PF-V-4-WA-0001	C	0108 JPR 11/15/12	JPR 3/2/11	SHEET 2 OF 2

BID DOCUMENTS

MARK	REVISION DESCRIPTION	BY	APP.	DATE

BergerABAM
33301 9th Avenue South, Suite 300
Federal Way, Washington 98003-2600
(206) 431-2300 Fax: (206) 431-2250

SCOTT BRANLUND STATE OF WASHINGTON GENERAL PROFESSIONAL ENGINEER

DRAWN BY MDB
DESIGN BY VHN
CHECK BY CSB
PROJ MGR CSB

PORT OF GRAYS HARBOR
28TH STREET BOAT LAUNCH IMPROVEMENTS
CONSTRUCTION PHASE II

GRADING & DRAINAGE DETAILS - SHEET 2

DRAWING NO. C-15
PROJECT NO. FAWAT-12-145
DATE: 10/30/17
SHEET NO. 22 OF 48

Last Saved by: Garth.nelson on: Jul 27, 2017 3:02 PM File: Q:\FederalWay\2012\FAWAT-12-145\CADD\Dwgs\Phase_II\P22_C15.dwg

Last Saved on Tue Aug 16 2005 at 10:03AM by Jacob File Name: O:\2006\FAWAT-06-001\CADD\dwgs\C-1.dwg Scale: 1

Copyright © BergerABAM. All Rights Reserved.

PF-CCB-WA-0003

Washington GULD*

	CARTRIDGE SIZE	TREATMENT FLOW RATE GPM / CFS	TOTAL FLOW CAPACITY CFS
	12.00"	13.6 / 0.030	2.5
	18.00"	20.4 / 0.045	2.6
STACKED	12.00" + 12.00"	27.2 / 0.061	2.7
STACKED	18.00" + 12.00"	34 / 0.076	2.7

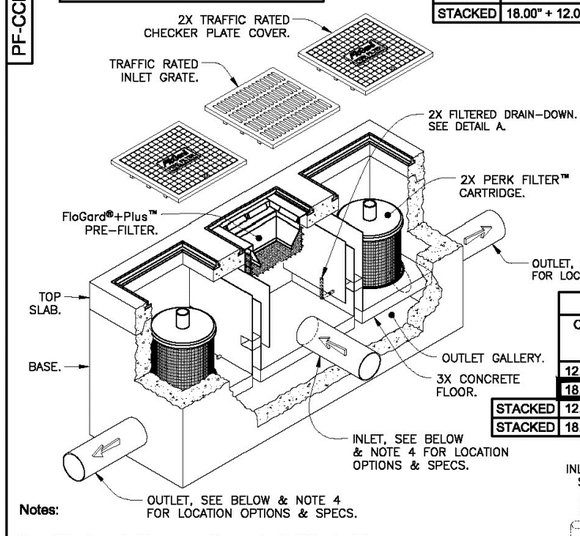

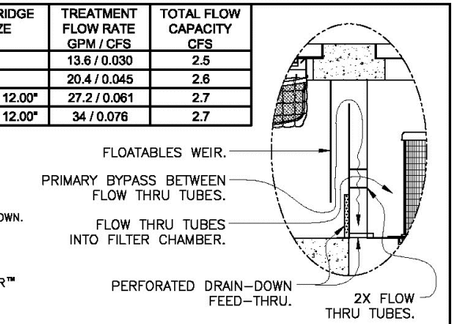

DETAIL A
INLET / BYPASS ASSEMBLY & DRAIN–DOWN SCALE: 2X

MINIMUM DEPTHS (SEE NOTE 8)

	CARTRIDGE SIZE	Ø 6.0" OUTLET PIPE (IN INCHES)	Ø 8.0" OUTLET PIPE (IN INCHES)	Ø 10.0" OUTLET PIPE (IN INCHES)	Ø 12.0" OUTLET PIPE (IN INCHES)
	12.00"	33	35	37	39
	18.00"	40	42	44	46
STACKED	12.00" + 12.00"	50	52	54	56
STACKED	18.00" + 12.00"	57	59	61	63

Notes:

1. Structure shall be pre-cast concrete (4,000 psi min), reinforced with welded wire mesh (4x4-6-6). Special reinforcing may be specified.
2. Catch basin/filter system shall be supplied with traffic rated (H20) bicycle-proof grates and checker plate cover. Cast iron grates and/or covers are available upon request.
3. All exposed steel components shall have a hot dipped galvanized finish in accordance with ASTM A-123.
4. Inlet pipe(s) may enter device on opposite sides of the inlet chamber. Outlet pipe(s) may exit on all four sides. All pipe is Ø 12" maximum. For pipe sizes greater than Ø 12", contact KriStar Enterprises for engineering assistance.
5. Inlet chamber shall be supplied with drain-down device, designed to remove standing water between storm events.
6. Perk-Filter catch basin/filter device shall be supplied with FloGard PLUS pre-filter device. FloGard PLUS and Perk-Filter cartridge shall be maintained in accordance with manufacturer recommendations.
7. Perk-Filter catch basin/filter assembly may be supplied with individual or multiple 18" or 12" high Perk-Filter cartridge. Filter cartridge may be stacked to accommodate higher flow rates.
8. For depths less than specified minimum contact KriStar Enterprises for engineering assistance.

* **Treatment Flow Rates shown conform to Washington State GULD Specifications.**

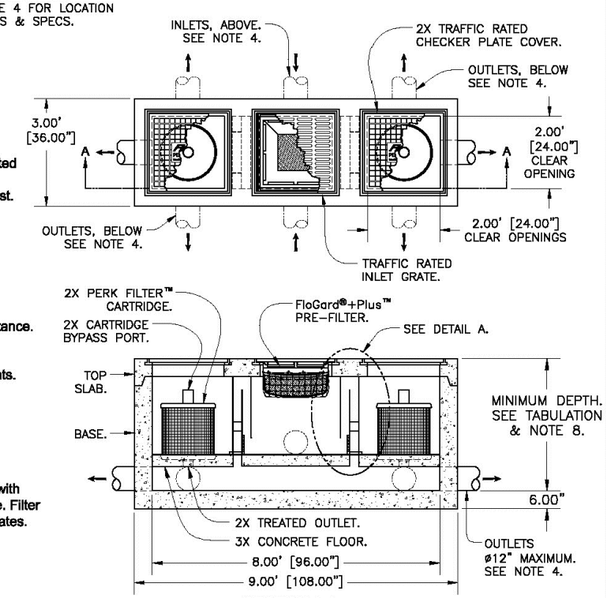

SECTION A-A
DOUBLE CARTRIDGE CONCRETE CATCH BASIN (BILATERAL CONFIGURATION)

TITLE
FloGard® Perk Filter™
CONCRETE CATCH BASIN
Washington State GULD
- DOUBLE CARTRIDGE - (BILATERAL CONFIGURATION)

KriStar Enterprises, Inc.
360 Sutton Place, Santa Rosa, CA 95407
Ph: 800.579.8819, Fax: 707.524.8186, www.kristar.com

DRAWING NO.	REV	ECO	DATE	
PF-CCB-WA-0003	A	0108 JPR 11/15/12	JPR 3/2/11	SHEET 1 OF 1

BID DOCUMENTS

MARK	REVISION DESCRIPTION	BY	APP.	DATE

BergerABAM
33301 9th Avenue South, Suite 300
Federal Way, Washington 98003-2600
(206) 431-2300 Fax: (206) 431-2250

SCOTT BRANLUND STATE OF WASHINGTON REGISTERED PROFESSIONAL ENGINEER

DRAWN BY MDB
DESIGN BY VHN
CHECK BY CSB
PROJ MGR CSB

PORT OF GRAYS HARBOR
28TH STREET BOAT LAUNCH IMPROVEMENTS
CONSTRUCTION PHASE II

GRADING & DRAINAGE DETAILS - SHEET 3

DRAWING NO. C-16
PROJECT NO. FAWAT-12-145
DATE: 10/30/17
SHEET NO. 23 OF 48

Last Saved by: Garth.nelson on: Jul 27, 2017 3:02 PM File: Q:\FederalWay\2012\FAWAT-12-145\CADD\Dwgs\Phase_II\P22_C16.dwg

Last Saved on Tue Aug 16 2005 at 10:03AM by Jacob File Name: O:\2006\FAWAT-06-001\CADD\dwgs\C-1.dwg Scale: 1

Copyright © BergerABAM. All Rights Reserved.

PF-CCB-WA-0007

Washington GULD*

	CARTRIDGE SIZE	TREATMENT FLOW RATE GPM / CFS	TOTAL FLOW CAPACITY CFS
	12.00"	27.2 / 0.061	2.6
	18.00"	40.8 / 0.091	2.7
STACKED	12.00" + 12.00"	54.4 / 0.121	2.8
STACKED	18.00" + 12.00"	68 / 0.152	2.8

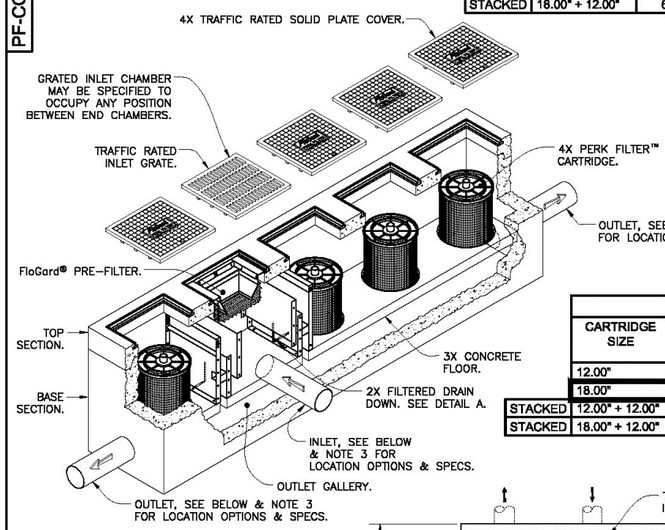

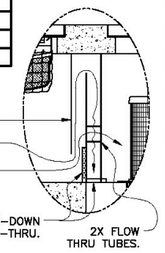

DETAIL A
INLET / BYPASS ASSEMBLY & DRAIN-DOWN SCALE: 2X

MINIMUM DEPTHS (SEE NOTE 8)

	CARTRIDGE SIZE	Ø 6.0" OUTLET PIPE (IN INCHES)	Ø 8.0" OUTLET PIPE (IN INCHES)	Ø 10.0" OUTLET PIPE (IN INCHES)	Ø 12.0" OUTLET PIPE (IN INCHES)
	12.00"	33	35	37	39
	18.00"	40	42	44	46
STACKED	12.00" + 12.00"	50	52	54	56
STACKED	18.00" + 12.00"	57	59	61	63

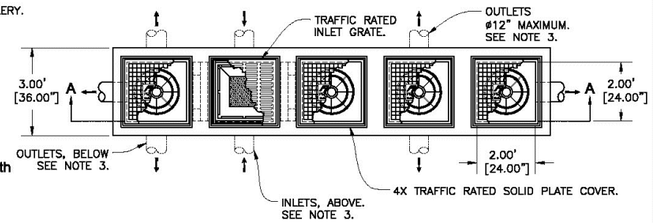

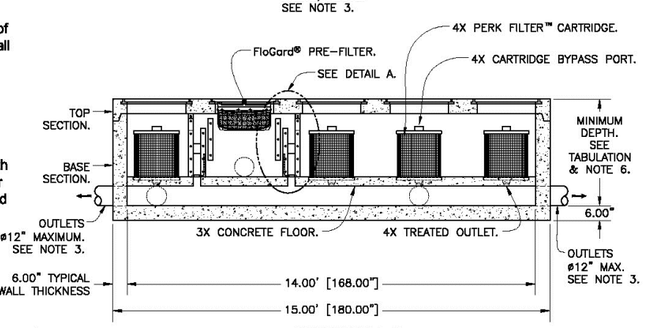

SECTION A-A
FOUR CARTRIDGE CONCRETE CATCH BASIN
(BILATERAL CONFIGURATION)

Notes:

1. Precast concrete structure shall be manufactured in accordance with ASTM Designation C857 and C858.
2. Perk Filter™ Catch basin shall be supplied with traffic rated (H20) bicycle-proof grates and solid plate cover.
3. Inlet pipe(s) may enter device on three sides of the inlet chamber. Outlet pipe(s) may exit on all four sides. All pipe is Ø 12" maximum.
4. Inlet chamber shall be supplied with a drain-down device designed to remove standing water between storm events.
5. Perk Filter™ catch basin shall be supplied with FloGard® pre-filter device. FloGard® pre-filter and Perk Filter™ cartridge shall be maintained in accordance with manufacturer recommendations.
6. For depths less than the specified minimum contact Oldcastle® Stormwater Solutions for engineering assistance.

* **Treatment Flow Rates shown conform to Washington State GULD Specifications.**

Perk Filter™
Concrete Catch Basin
Four Cartridge
Washington State GULD
(Bilateral Configuration)
Media Filtration

Oldcastle® Stormwater Solutions
7921 Southpark Plaza, Suite 200 | Littleton, CO | 80120 | Ph: 800.579.8819 | oldcastlestormwater.com
THIS DOCUMENT IS THE PROPERTY OF OLDCASTLE PRECAST, INC. IT IS SUBMITTED FOR REFERENCE PURPOSES ONLY AND SHALL NOT BE USED IN ANY WAY INJURIOUS TO THE INTERESTS OF SAID COMPANY. COPYRIGHT © 2010 OLDCASTLE PRECAST, INC. ALL RIGHTS RESERVED.

DRAWING NO.	REV	ECO	DATE	
PF-CCB-WA-0007	C	ECO-0122 JPR 10/3/14	JPR 3/2/11	SHEET 1 OF 1

PF-CCB-0004

	CARTRIDGE SIZE	TREATMENT FLOW RATE GPM / CFS	TOTAL FLOW CAPACITY CFS
	12.00"	36 / 0.08	1.3
	18.00"	54 / 0.12	1.4
STACKED	12.00" + 12.00"	72 / 0.16	1.5
STACKED	18.00" + 12.00"	90 / 0.20	1.5

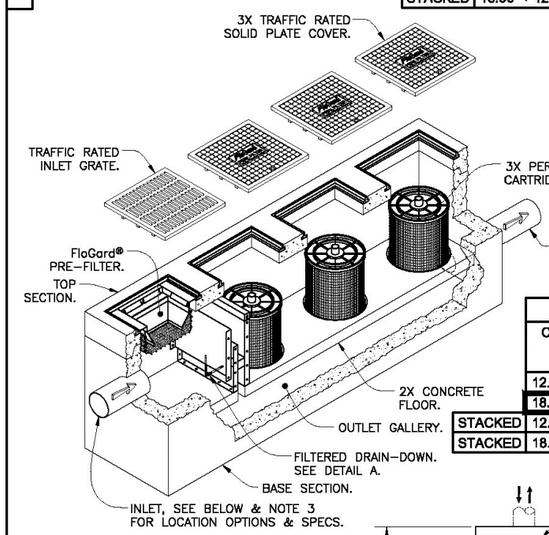

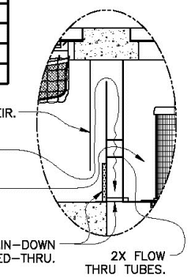

DETAIL A
INLET / BYPASS ASSEMBLY & DRAIN-DOWN SCALE: 2X

MINIMUM DEPTHS (SEE NOTE 8)

	CARTRIDGE SIZE	Ø 6.0" OUTLET PIPE (IN INCHES)	Ø 8.0" OUTLET PIPE (IN INCHES)	Ø 10.0" OUTLET PIPE (IN INCHES)	Ø 12.0" OUTLET PIPE (IN INCHES)
	12.00"	33	35	37	39
	18.00"	40	42	44	46
STACKED	12.00" + 12.00"	50	52	54	56
STACKED	18.00" + 12.00"	57	59	61	63

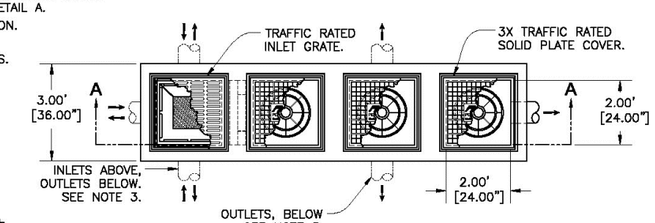

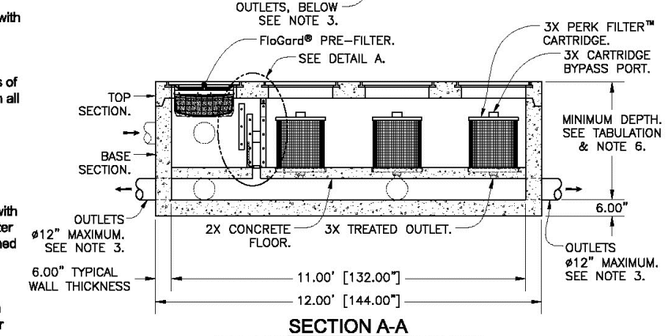

SECTION A-A
TRIPLE CARTRIDGE CONCRETE CATCH BASIN
(END GRATE CONFIGURATION)

Notes:

1. Precast concrete structure shall be manufactured in accordance with ASTM Designation C857 and C858.
2. Perk Filter™ Catch basin shall be supplied with traffic rated (H20) bicycle-proof grates and solid plate cover.
3. Inlet pipe(s) may enter device on three sides of the inlet chamber. Outlet pipe(s) may exit on all four sides. All pipe is Ø 12" maximum.
4. Inlet chamber shall be supplied with a drain-down device designed to remove standing water between storm events.
5. Perk Filter™ catch basin shall be supplied with FloGard® pre-filter device. FloGard® pre-filter and Perk Filter™ cartridge shall be maintained in accordance with manufacturer recommendations.
6. For depths less than the specified minimum contact Oldcastle® Stormwater Solutions for engineering assistance.

Perk Filter™
Concrete Catch Basin
Triple Cartridge
(End Grate Configuration)
Media Filtration

Oldcastle® Stormwater Solutions
7921 Southpark Plaza, Suite 200 | Littleton, CO | 80120 | Ph: 800.579.8819 | oldcastlestormwater.com
THIS DOCUMENT IS THE PROPERTY OF OLDCASTLE PRECAST, INC. IT IS SUBMITTED FOR REFERENCE PURPOSES ONLY AND SHALL NOT BE USED IN ANY WAY INJURIOUS TO THE INTERESTS OF SAID COMPANY. COPYRIGHT © 2010 OLDCASTLE PRECAST, INC. ALL RIGHTS RESERVED.

DRAWING NO.	REV	ECO	DATE	
PF-CCB-0004	F	ECO-0122 JPR 10/3/14	JPR 6/4/08	SHEET 1 OF 1

BID DOCUMENTS

MARK	REVISION DESCRIPTION	BY	APP.	DATE

BergerABAM
33301 9th Avenue South, Suite 300
Federal Way, Washington 98003-2600
(206) 431-2300 Fax: (206) 431-2250

SCOTT BRANLUND STATE OF WASHINGTON REGISTERED PROFESSIONAL ENGINEER

DRAWN BY MDB
DESIGN BY VHN
CHECK BY CSB
PROJ MGR CSB

PORT OF GRAYS HARBOR
28TH STREET BOAT LAUNCH IMPROVEMENTS
CONSTRUCTION PHASE II

GRADING & DRAINAGE DETAILS - SHEET 4

DRAWING NO. C-17
PROJECT NO. FAWAT-12-145
DATE: 10/30/17
SHEET NO. 24 OF 48

Last Saved by: Garth.nelson on: Jul 27, 2017 3:02 PM File: Q:\FederalWay\2012\FAWAT-12-145\CADD\Dwgs\Phase_II\P22_C17.dwg
Last Saved on Tue Aug 16 2005 at 10:03AM by Jacob File Name: O:\2006\FAWAT-06-001\CADD\dwgs\C-1.dwg Scale: 1

Copyright © BergerABAM. All Rights Reserved.

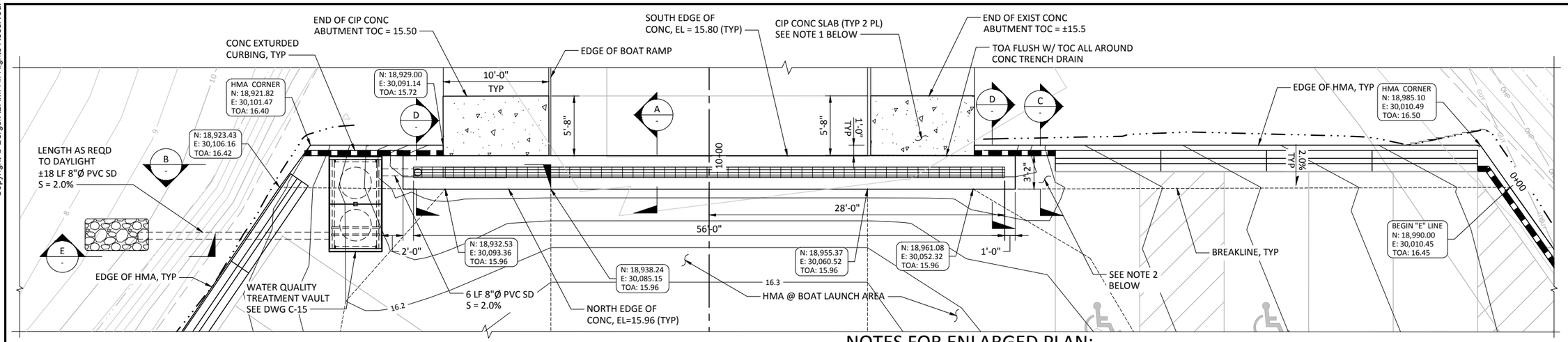

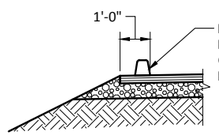

C - SECTION
SCALE: NTS

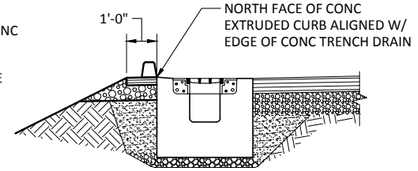

D - SECTION
SCALE: NTS

1 / C-8 ENLARGED TRENCH DRAIN PLAN
SCALE: 1" = 5'
5 0 5 10
scale feet

NOTES FOR ENLARGED PLAN:

1. CONSTRUCT 10'-0"x5'-8"x8" THK CIP CONC SLAB ON GRADE BETWEEN ENDS OF ABUTMENT AND SOUTH EDGE OF CONC AROUND TRENCH DRAIN. REINF CIP SLAB W/ #4 @ 12" OC EW LOCATED W/ 2" CLR FROM TOP OF SLAB. TOP OF SLAB SHALL BE FLUSH WITH TOP OF CONC AROUND TRENCH DRAIN (EL=15.80) AND FLUSH W/ TOP OF CONC ABUTMENT, AND UNIFORMLY SLOPED BETWEEN TRENCH DRAIN AND ABUTMENT. PLACE SLAB ON COMPACTED 4" THK BASE COURSE OVER COMPACTED SUBGRADE. PLACE 3/8" THK PREMOLDED EXPANSION JOINT MATERIAL FULL DEPTH BETWEEN SLAB AND ABUTMENT, AND BETWEEN SLAB AND CONC TRENCH DRAIN.
2. HMA ON WEST END OF TRENCH DRAIN SHALL BE FLUSH W/ TOP OF CONC. WARP HMA BETWEEN END OF TRENCH DRAIN AND JERSEY BARRIERS TO CREATE PAVEMENT SLOPE S = 2.0% FROM SOUTH EDGE OF HMA DOWN TO BREAKLINE RUNNING EAST/WEST.

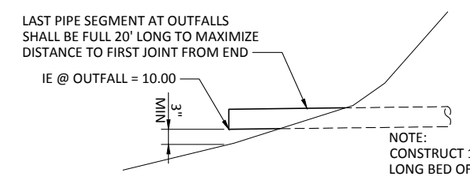

NOTE:
CONSTRUCT 1'-0" THK x 4'-0" WIDE x 8'-0" LONG BED OF QUARRY SPALLS AT OUTFALL LOCATION. TOP OF QUARRY SPALLS SHALL BE FLUSH WITH TOP OF EXIST GRADE. UPHILL SIDE OF QUARRY SPALL BED SHALL EXTEND TO TOP OF PIPE. QUARRY SPALLS NOT SHOWN.

E - SECTION
SCALE: NTS

NOTES FOR SECTIONS A & B:

1. COMPACT SUBGRADE, PLACE 4" MIN OF BASE COURSE TO CREATE SURFACE FOR CIP CONCRETE CONSTRUCTION, AND BACKFILL SIDES WITH CDF AS SHOWN ON SECTION A.
2. WIDTH OF CHANNEL SHALL BE 1'-0" AND MIN DEPTH OF CHANNEL AT WEST SIDE OF ROAD SHALL BE 1'-0", MEASURED FROM DOWNHILL SIDE OF TOP OF GRATING. BOTTOM SLOPE OF TRENCH DRAIN SHALL = 2.0%
   - LENGTH OF TRENCH DRAIN, L = 56'-0"
   - BOTTOM OF TRENCH CHANNEL (WEST END): EL = 14.81
   - BOTTOM OF TRENCH CHANNEL (EAST END): EL = 13.69
3. TRENCH DRAIN FRAME AND GRATE: EXTRA HEAVY DUTY RATED FOR H-20 LOADS (MIN) BASED ON TESTING OF A 40,000 LB PROOF LOAD ON A 9" X 9" SQ AREA (494 PSI) FOR ONE MINUTE WITH NO SIGNS OF CRACKING OR DETRIMENTAL PERMANENT DEFORMATION IN ACCORDANCE WITH AASHTO M-306. GRATE OPENINGS SHALL MEET ADA ACCESSIBILITY REQUIREMENTS WITH TYPE 'C' SLOTS WITH LONG DIRECTION OF OPENING PARALLEL WITH TRENCH DRAIN (PERPENDICULAR TO VEHICLE AND PEDESTRIAN TRAFFIC). WIDTH OF OPENINGS SHALL BE 1/2 INCH MAX. REFER TO SPECIFICATION REQUIREMENTS ON DRAWING G-7. GRATE SHALL BE BOLTED DOWN TO FRAME. GRATE SHALL BE RECESSED 1/2-INCH FROM 5% GRADE LINE PROJECTED FROM EL = 15.80 @ STA 10+00 TO EL = 15.96 @ STA 10+03.17
4. 3/8" TO 1/2" RADIUS ON TOP OUTSIDE CORNERS OF THE TRENCH DRAIN

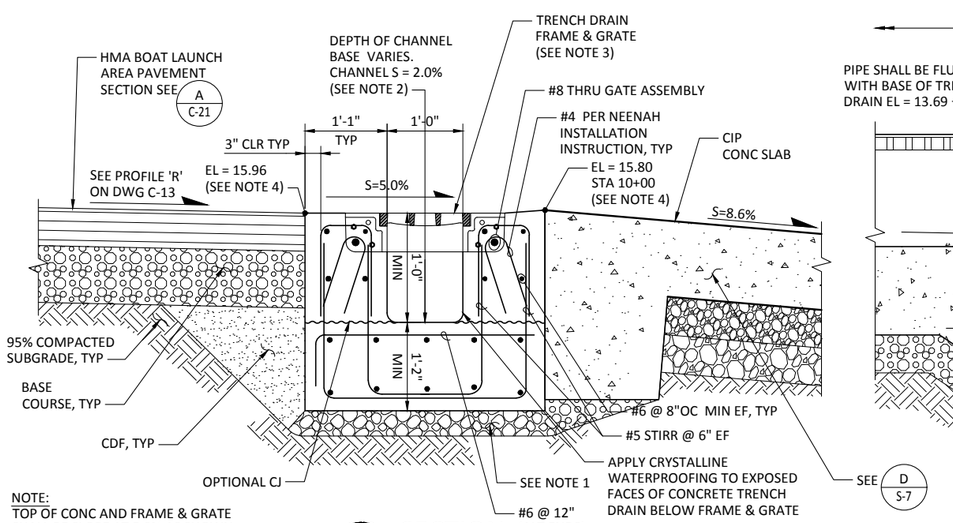

NOTE:
TOP OF CONC AND FRAME & GRATE SHALL BE SLOPE AT 5.0% AS SHOWN. VERTICAL EDGES OF CONC TRENCH SHALL BE "TRUE VERTICAL".

A - SECTION
SCALE: 1"=1'-0"

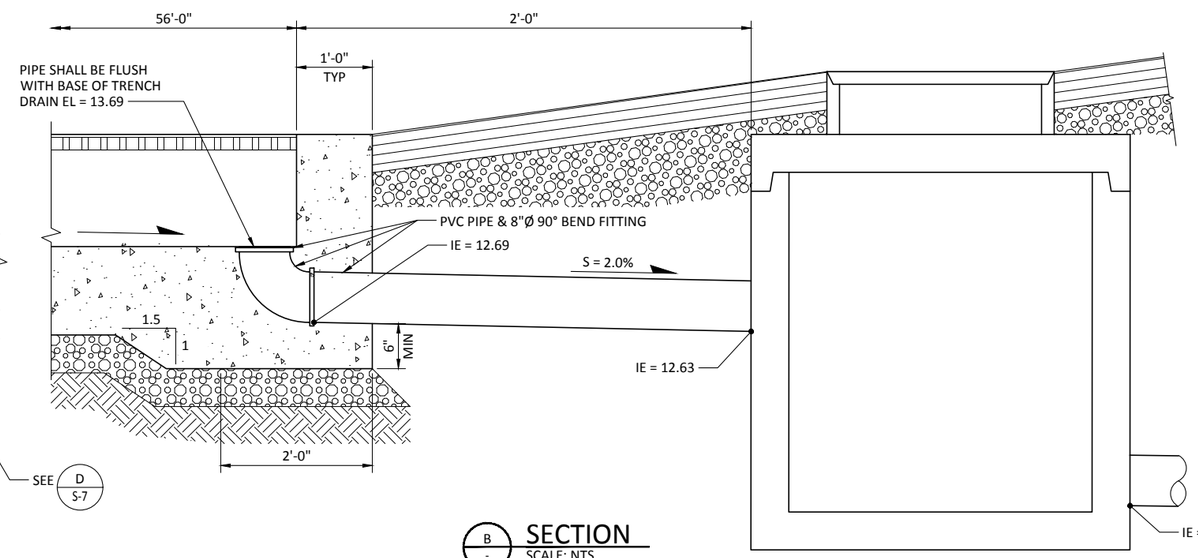

B - SECTION
SCALE: NTS

BID DOCUMENTS

MARK	REVISION DESCRIPTION	BY	APP.	DATE

BergerABAM
33301 9th Avenue South, Suite 300
Federal Way, Washington 98003-2600
(206) 431-2300 Fax: (206) 431-2250

SCOTT BRANLUND, STATE OF WASHINGTON, REGISTERED PROFESSIONAL ENGINEER

DRAWN BY MDB
DESIGN BY VHN
CHECK BY CSB
PROJ MGR CSB

PORT OF GRAYS HARBOR
28TH STREET BOAT LAUNCH IMPROVEMENTS CONSTRUCTION PHASE II

GRADING & DRAINAGE DETAILS - SHEET 5

DRAWING NO. C-18
PROJECT NO. FAWAT-12-145
DATE: 10/30/17
SHEET NO. 25 OF 48

Last Saved by: Garth.nelson on: Jul 27, 2017 3:03 PM File: Q:\FederalWay\2012\FAWAT-12-145\CADD\Dwgs\Phase_II\P22_C18.dwg

Last Saved on Tue Aug 16 2005 at 10:03AM by Jacob File Name: O:\2006\FAWAT-06-001\CADD\dwgs\C-1.dwg Scale: 1

Copyright © BergerABAM. All Rights Reserved.

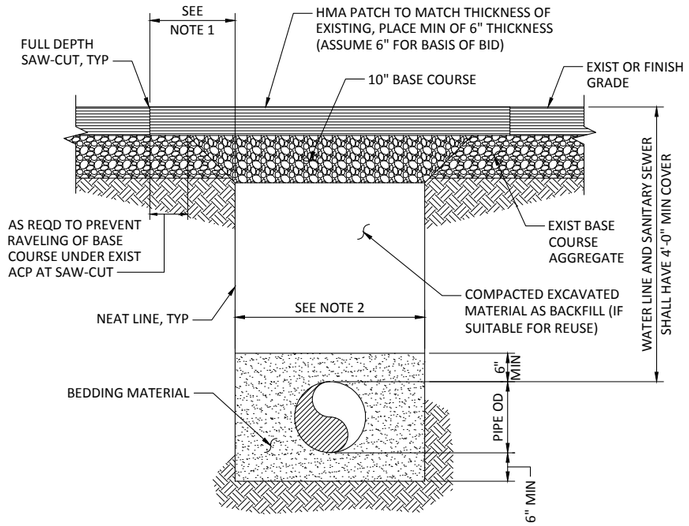

1 / - DETAIL - TYP TRENCH
SCALE: 3/4"=1'-0"

NOTES FOR PIPE TRENCH DETAIL

1. CONTRACTOR SHALL DETERMINE LOCATION OF SAW-CUTS (WIDTH OF EXIST PAVEMENT OR CONC REMOVAL) FOR PIPE TRENCH SUCH THAT NO RAVELING OF EXISTING BASE COURSE AGGREGATE OCCURS BELOW EXIST PAVEMENT OR CONC AT SAW-CUT LINE. IF RAVELING OF EXIST BASE COURSE DOES OCCUR UNDER PAVEMENT OR CONC, CONTACTOR SHALL MAKE ANOTHER SAW-CUT FURTHER BACK TO ACHIEVE A SUPPORTED EDGE OF PAVEMENT OR CONC AT NO ADDITIONAL COST. APPLY TACK COAT TO VERTICAL FACES PRIOR TO PLACING HMA PATCH.
2. TRENCH WIDTH FOR WATER PIPE SHALL BE 2'-6". TRENCH WIDTH FOR SS AND SD PIPES 15" DIA AND SMALLER SHALL BE 3'-4".
3. PIPE MARKER TAPE NOT SHOWN, BUT SHALL BE PLACED AS DIRECTED IN SPECIFICATIONS.
4. TRENCH SAFETY SYSTEMS (SHORING) SHALL BE USED AS APPLICABLE AND AS DESCRIBED BY OSHA TO MAINTAIN VERTICAL SIDES FOR TRENCH AND MINIMIZE AMOUNT OF EXCAVATION, BACKFILL, AND SURFACE REPAIR. LAYING BACK TRENCH EXCAVATION (FLATTER SIDE SLOPES) IN LIEU OF SHORING SHALL NOT BE ALLOWED.
5. DEWATER TRENCH AS NECESSARY FOR DEEPER EXCAVATIONS.

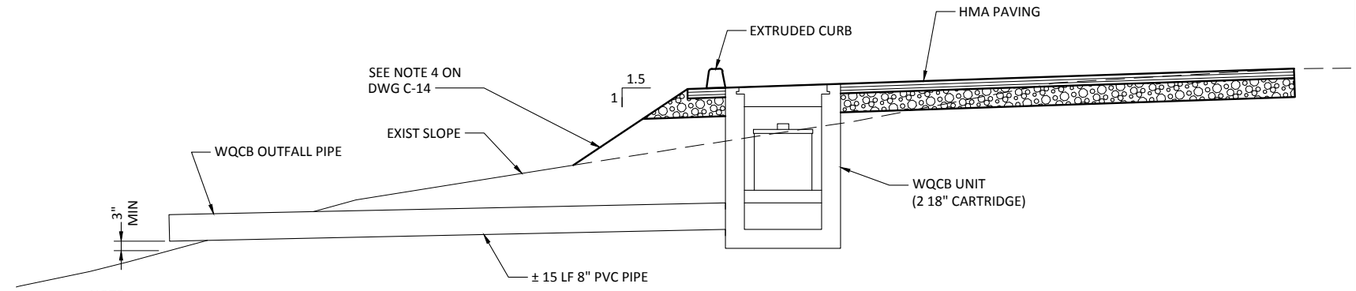

NOTE:
CONSTRUCT 1'-0" THK x 4'-0" WIDE x 8'-0" LONG BED OF QUARRY SPALLS AT OUTFALL LOCATION. TOP OF QUARRY SPALLS SHALL BE FLUSH WITH TOP OF EXIST GRADE. UPHILL SIDE OF QUARRY SPALL BED SHALL EXTEND TO TOP OF PIPE. QUARRY SPALLS NOT SHOWN.

A / C-8 SECTION - E-LINE STA 2+02
SCALE: 1/2"=1'-0"

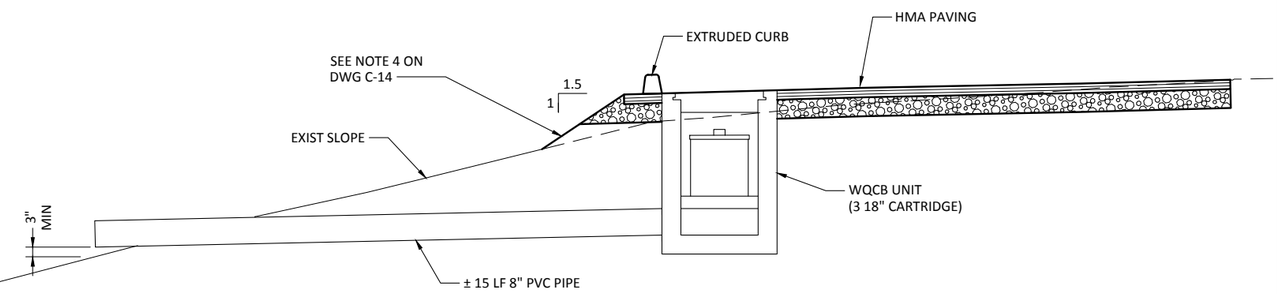

NOTE:
CONSTRUCT 1'-0" THK x 4'-0" WIDE x 8'-0" LONG BED OF QUARRY SPALLS AT OUTFALL LOCATION. TOP OF QUARRY SPALLS SHALL BE FLUSH WITH TOP OF EXIST GRADE. UPHILL SIDE OF QUARRY SPALL BED SHALL EXTEND TO TOP OF PIPE. QUARRY SPALLS NOT SHOWN.

B / C-9 SECTION - E-LINE STA 5+42
SCALE: 1/2"=1'-0"

BID DOCUMENTS

MARK	REVISION DESCRIPTION	BY	APP.	DATE

BergerABAM
33301 9th Avenue South, Suite 300
Federal Way, Washington 98003-2600
(206) 431-2300 Fax: (206) 431-2250

SCOTT BRANLUND STATE OF WASHINGTON REGISTERED PROFESSIONAL ENGINEER

DRAWN BY MDB
DESIGN BY VHN
CHECK BY CSB
PROJ MGR CSB

PORT OF GRAYS HARBOR
28TH STREET BOAT LAUNCH IMPROVEMENTS
CONSTRUCTION PHASE II

GRADING & DRAINAGE DETAILS - SHEET 6

DRAWING NO. C-19
PROJECT NO. FAWAT-12-145
DATE: 10/30/17
SHEET NO. 26 OF 48

Last Saved by: Garth.nelson on: Jul 27, 2017 3:03 PM File: Q:\FederalWay\2012\FAWAT-12-145\CADD\Dwgs\Phase_II\P22_C19.dwg

Last Saved on Tue Aug 16 2005 at 10:03AM by Jacob File Name: O:\2006\FAWAT-06-001\CADD\dwgs\C-1.dwg Scale: 1

Copyright © BergerABAM. All Rights Reserved.

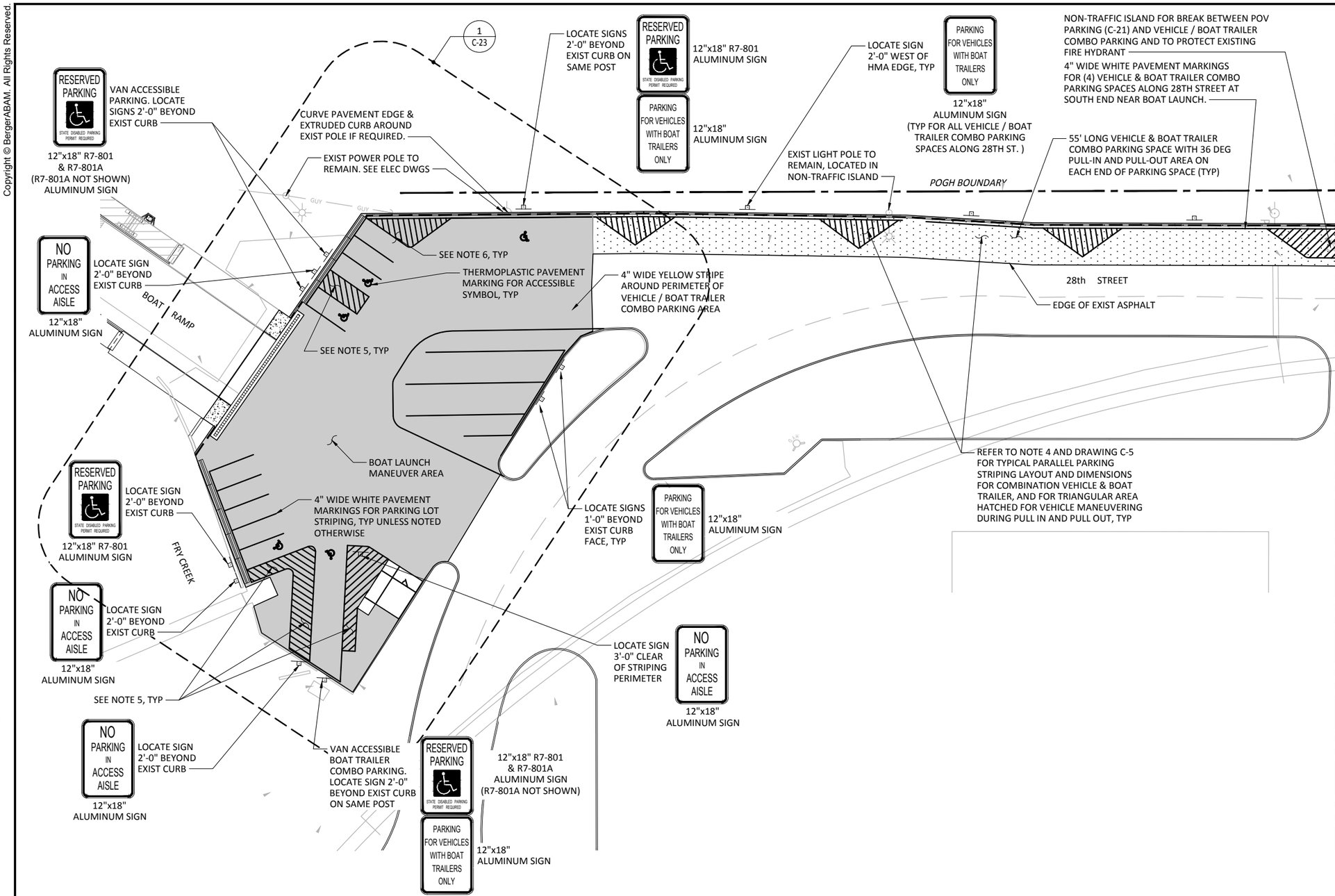

PAVING & STRIPING PLAN

SCALE: 1"=20'-0"

NOTES:

1. QUANTITIES IN LEGEND REPRESENT TOTAL PROJECT QUANTITIES.
2. FOR LOCATION OF STRIPING, SEE DWG C-5 AND ENLARGED PLAN ON C-23.
3. WHERE CONCRETE CURB IS SHOWN, INSIDE FACE / GUTTER LINE SHALL BE LOCATED 1'-0" FROM PAVEMENT EDGE.
4. HATCH PATTERN STRIPING USED IN TRIANGULAR SHAPED MANEUVER AREAS BETWEEN VEHICLE/BOAT TRAILER COMBO PARKING SPACES SHALL BE ANGLED AT 45 DEGREES AS SHOWN ON PLAN AND BE 4" WIDE YELLOW PAVEMENT MARKINGS SPACED 2'-0" APART.
5. HATCH PATTERN STRIPING USED ADJACENT TO ACCESSIBLE PARKING SPACES SHALL BE ANGLED AT 45 DEGREES (UNLESS OTHERWISE SHOWN) AND BE 4" WIDE YELLOW PAVEMENT MARKING SPACED 2'-0" APART.
6. ALL OTHER AREAS SHOWN WITH HATCHED PATTERN STRIPING SHALL BE 4" WIDE YELLOW PAVEMENT MARKINGS SPACED 2'-0" APART.
7. ACCESSIBLE PARKING SIGNAGE SHALL BE IN ACCORDANCE WITH WSDOT SIGN FABRICATION MANUAL M55-05, LATEST EDITION.

MATCH LINE SEE DWG C-21

LEGEND:

- 3" HMA PAVING: ALONG 28th ST: 12,910 SF; NEAR HENDERSON: 26,540 SF, SEE A/C-23
- 6" HMA PAVING (15,870 SF), SEE B/C-23
- CONC EXTRUDED CURB (613' LF)

1" = 20' scale — 20 0 20 40 feet

BID DOCUMENTS

MARK	REVISION DESCRIPTION	BY	APP.	DATE

BergerABAM
33301 9th Avenue South, Suite 300
Federal Way, Washington 98003-2600
(206) 431-2300 Fax: (206) 431-2250

SCOTT BRANLUND — STATE OF WASHINGTON — STRUCTURAL ENGINEER — PROFESSIONAL ENGINEER

DRAWN BY MDB
DESIGN BY VHN
CHECK BY CSB
PROJ MGR CSB

PORT OF GRAYS HARBOR
28TH STREET BOAT LAUNCH IMPROVEMENTS
CONSTRUCTION PHASE II

PAVING & STRIPING PLAN - SHEET 1

DRAWING NO. C-20
PROJECT NO. FAWAT-12-145
DATE: 10/30/17
SHEET NO. 27 OF 48

Last Saved by: Nelsen on: Oct 30, 2017 12:50 PM File: Q:\FederalWay\2012\FAWAT-12-145\CADD\Dwgs\Phase_II\P22_C20.dwg

Last Saved on Tue Aug 16 2005 at 10:03AM by Jacob File Name: O:\2006\FAWAT-06-001\CADD\dwgs\C-1.dwg Scale: 1

Copyright © BergerABAM. All Rights Reserved.

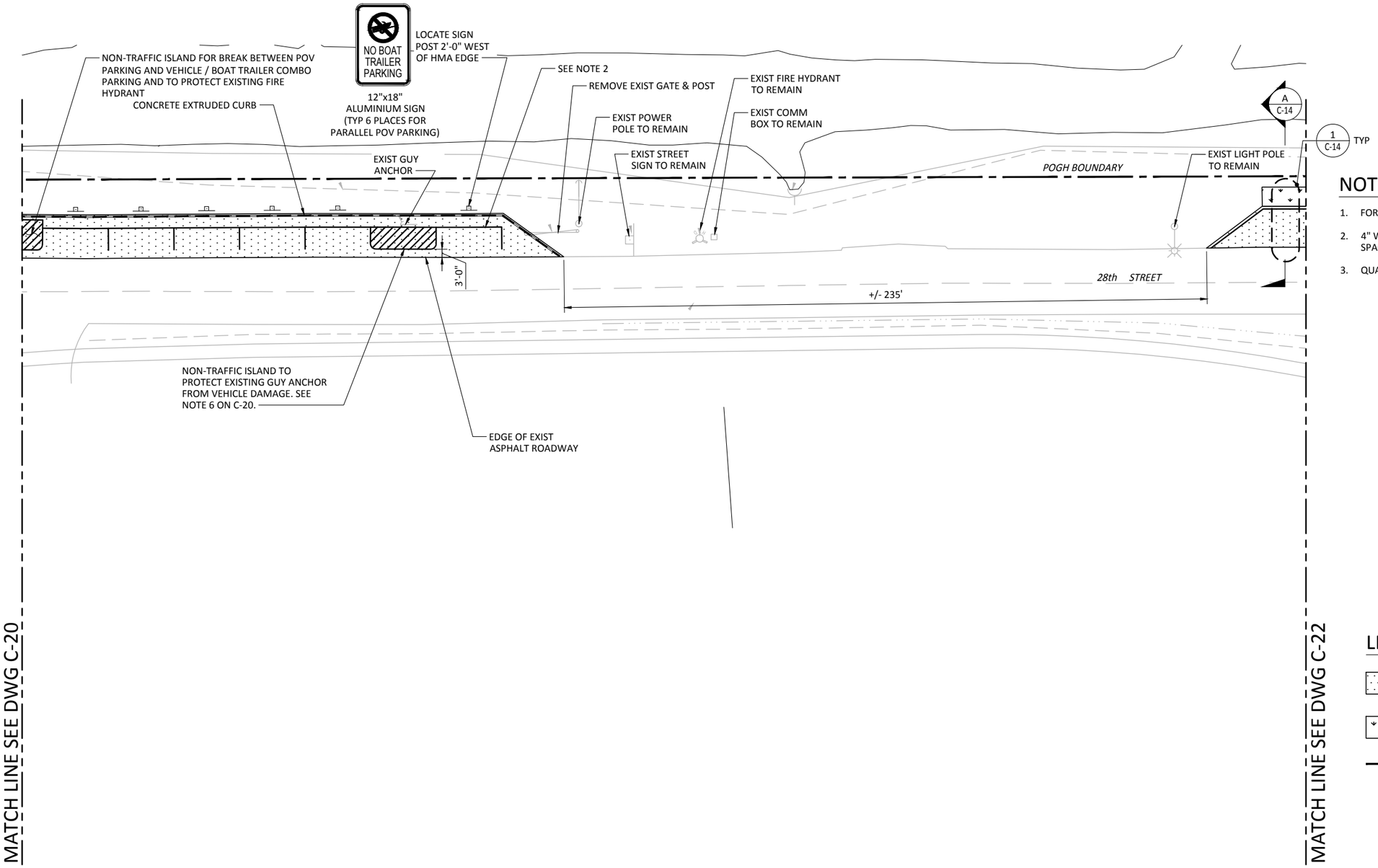

NOTES:

1. FOR LOCATION OF STRIPING, SEE LAYOUT DWG C-6.
2. 4" WIDE WHITE PAVEMENT MARKINGS FOR (6) 24' X 8' POV PARKING SPACES LOCATED 4'-0" EAST OF EAST SIDE OF EXTRUDED CURB LINE.
3. QUANTITIES IN LEGEND REPRESENT TOTAL PROJECT QUANTITIES.

LEGEND:

- 3" HMA PAVING: ALONG 28th ST: 12,910 SF; NEAR HENDERSON: 26,540 SF, SEE A C-23
- GRASSY FILTER STRIP
- CONC EXTRUDED CURB (613' LF)

PAVING & STRIPING PLAN

SCALE: 1"=20'-0"

1" = 20' scale 20 0 20 40 feet

BID DOCUMENTS

MARK	REVISION DESCRIPTION	BY	APP.	DATE

BergerABAM
33301 9th Avenue South, Suite 300
Federal Way, Washington 98003-2600
(206) 431-2300 Fax: (206) 431-2250

SCOTT BRANLUND STATE OF WASHINGTON REGISTERED PROFESSIONAL ENGINEER

DRAWN BY MDB
DESIGN BY VHN
CHECK BY CSB
PROJ MGR CSB

PORT OF GRAYS HARBOR
28TH STREET BOAT LAUNCH IMPROVEMENTS CONSTRUCTION PHASE II

PAVING & STRIPING PLAN - SHEET 2

DRAWING NO. C-21
PROJECT NO. FAWAT-12-145
DATE: 10/30/17
SHEET NO. 28 OF 48

Last Saved by: Garth.nelson on: Jul 27, 2017 3:03 PM File: Q:\FederalWay\2012\FAWAT-12-145\CADD\Dwgs\Phase_II\P22_C21.dwg

Last Saved on Tue Aug 16 2005 at 10:03AM by Jacob File Name: O:\2006\FAWAT-06-001\CADD\dwgs\C-1.dwg Scale: 1

Copyright © BergerABAM. All Rights Reserved.

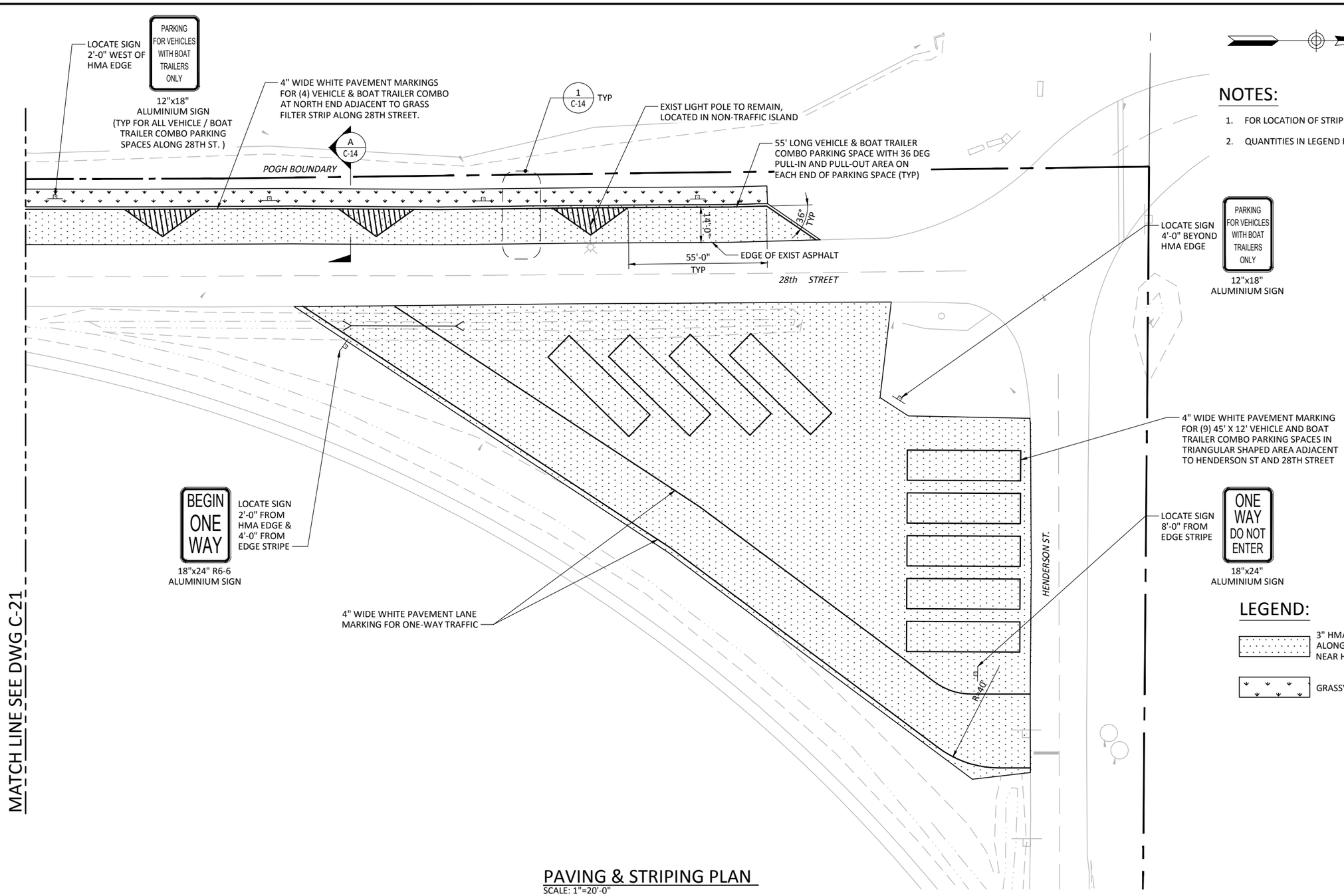

NOTES:

1. FOR LOCATION OF STRIPING, SEE LAYOUT DWG C-7
2. QUANTITIES IN LEGEND REPRESENT TOTAL PROJECT QUANTITIES.

LEGEND:

3" HMA PAVING:
ALONG 28th ST: 12,910 SF
NEAR HENDERSON: 26,540 SF, SEE A C-23

GRASSY FILTER STRIP

PAVING & STRIPING PLAN

SCALE: 1"=20'-0"

1" = 20' 20 0 20 40 scale feet

BID DOCUMENTS

MARK	REVISION DESCRIPTION	BY	APP.	DATE

BergerABAM
33301 9th Avenue South, Suite 300
Federal Way, Washington 98003-2600
(206) 431-2300 Fax: (206) 431-2250

SCOTT BRANLUND STATE OF WASHINGTON REGISTERED PROFESSIONAL ENGINEER

DRAWN BY MDB
DESIGN BY VHN
CHECK BY CSB
PROJ MGR CSB

PORT OF GRAYS HARBOR
28TH STREET BOAT LAUNCH IMPROVEMENTS
CONSTRUCTION PHASE II

PAVING & STRIPING PLAN - SHEET 3

DRAWING NO. C-22
PROJECT NO. FAWAT-12-145
DATE: 10/30/17
SHEET NO. 29 OF 48

Last Saved by: Garth.nelson on: Jul 27, 2017 3:03 PM File: Q:\FederalWay\2012\FAWAT-12-145\CADD\Dwgs\Phase_II\P22_C22.dwg

Last Saved on Tue Aug 16 2005 at 10:03AM by Jacob File Name: O:\2006\FAWAT-06-001\CADD\dwgs\C-1.dwg Scale: 1

Copyright © BergerABAM. All Rights Reserved.

NOTES:

1. ALL HATCHING STRIPING SPACED 2'-0" APART AND THE BORDER STRIPING OF HATCHING AREAS SHALL BE 4" WIDE, YELLOW COLOR. ALL OTHER STRIPING SHALL BE 4" WIDE, WHITE COLOR, UNLESS NOTED OTHERWISE.
2. ALL ACCESS PARKING SPACES SHALL HAVE THERMOPLASTIC PAVEMENT MARKING OF ACCESS PARKING SPACE SMYBOL (STANDARD) IN ACCORDANCE WITH WSDOT STD PLANS, M-24.60-04.
3. PRECAST CONCRETE JERSEY BARRIERS SHALL BE 10'-0" LONG X 2'-0" WIDE AT THE BASE PER WSDOT STD PLANS, C-8, TYPE 2.
4. DIMENSION SHOWN FOR TRIANGULAR MANUEVERING ISLAND FROM TIP TO STRIPE PARALLEL AND ADJACENT TO CURB RANGES FROM 10'-9" TO 10'-11" DEPENDING ON LOCATION AND ANGLES OF EXISTING EDGE OF PAVEMENT. REFER TO NOTE 4 ON DRAWING C-5.

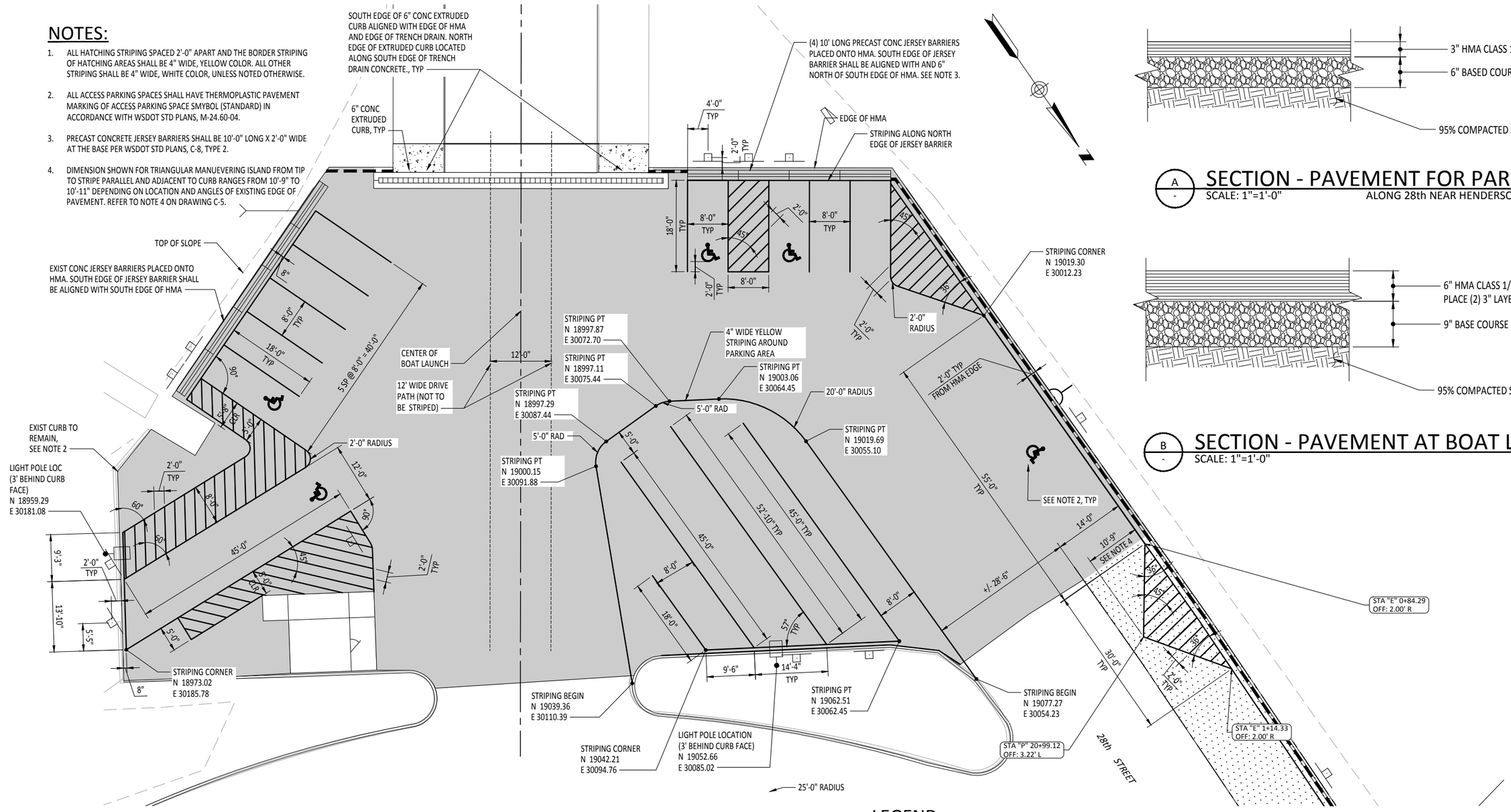

1 C-5,C-20 ENLARGED STRIPING PLAN
SCALE: 1"=10'-0"

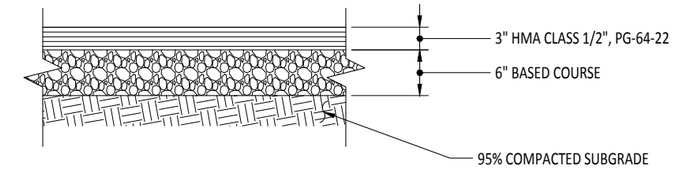

A - SECTION - PAVEMENT FOR PARKING
SCALE: 1"=1'-0" ALONG 28th NEAR HENDERSON STREET

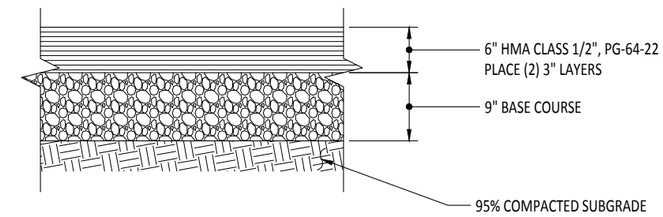

B - SECTION - PAVEMENT AT BOAT LAUNCH
SCALE: 1"=1'-0"

LEGEND

- HMA NEAR BOAT LAUNCH (SEE SECTION 'B' ABOVE)
- HMA FOR PARKING ALONG 28th ST AND NEAR HENDERSON ST. (SEE SECTION 'A' ABOVE)

1" = 20' 20 0 20 40 scale feet

BID DOCUMENTS

MARK	REVISION DESCRIPTION	BY	APP.	DATE

BergerABAM
33301 9th Avenue South, Suite 300
Federal Way, Washington 98003-2600
(206) 431-2300 Fax: (206) 431-2250

SCOTT BRANLUND STATE OF WASHINGTON REGISTERED PROFESSIONAL ENGINEER

DRAWN BY MDB
DESIGN BY VHN
CHECK BY CSB
PROJ MGR CSB

PORT OF GRAYS HARBOR
28TH STREET BOAT LAUNCH IMPROVEMENTS CONSTRUCTION PHASE II

PAVING & STRIPING DETAILS

DRAWING NO. C-23
PROJECT NO. FAWAT-12-145
DATE: 10/30/17
SHEET NO. 30 OF 48

Last Saved by: Garth.nelson on: Jul 27, 2017 3:03 PM File: Q:\FederalWay\2012\FAWAT-12-145\CADD\DwgsPhase_II\P22_C23.dwg

Last Saved on Tue Aug 16 2005 at 10:03AM by Jacob File Name: O:\[2006]\FAWAT-06-001\CADD\dwgs\C-1.dwg Scale: 1

Copyright © BergerABAM. All Rights Reserved.

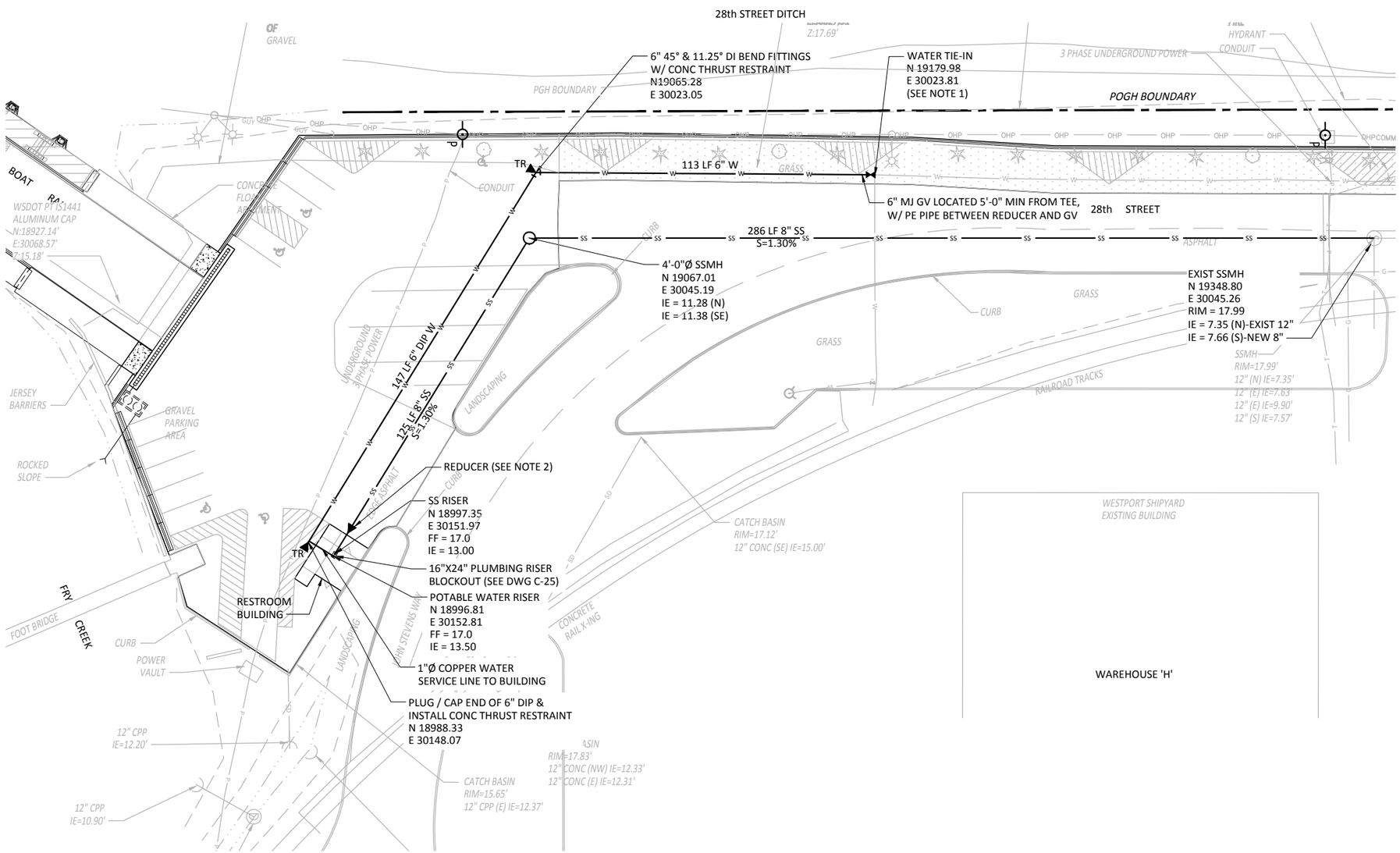

NOTES:

1. REMOVE EXISTING 90° BEND AND REPLACE WITH 10" TEE. INSTALL 10"x6" REDUCER AND 6" GATE VALVE ON SOUTH SIDE OF TEE. REMOVE EXISTING THRUST RESTRAINT TO FACILITATE CONSTRUCTION AND INSTALL REPLACEMENT THRUST RESTRAINT FOR TEE AND REDUCER.
2. ADD 8"x4" REDUCER TO SANITARY SEWER LINE 8'-0" FROM BLDG INSTALL STANDARD CLEANOUT ON 8" SIDE OF REDUCER (NOT SHOWN ON PLAN).
3. AT END OF 6" DIP WATER LINE, INSTALL 2" PIPE CONNECTION FOR BLOWOFF ASSEMBLY TO BE LOCATED IN ADJACENT LANDSCAPED AREA. SEE DETAIL 1 ON DRAWING C-26 (NOT SHOWN ON PLAN).
4. ADJACENT TO PIPE CONNECTION FOR BLOWOFF ASSEMBLY, INSTALL DIRECT TAP CORP STOP WITH BALL TYPE BRASS FOR 1" DIA TYPE K COPPER PIPE FOR BUILDING WATER SERVICE. EXTEND 1" TYPE K COPPER LINE TO LOCATION UNDER BUILDING WHERE OPENING IS PROVIDED IN FLOOR FOR PLUMBING CONNECTIONS. CONNECT 1" PIPING WITH REQUIRED FITTINGS TO BUILDING PLUMBING CONNECTIONS. CONTRACTOR SHALL PERFORM REQUIRED PRESSURE TEST AT BUILDING LOCATION TO DETERMINE IF PRESSURE REGULATOR IS REQUIRED ON 1" SERVICE PIPING TO PROTECT BUILDING PLUMBING AND FIXTURES. CONTRACTOR SHALL ASSUME PRESSURE REGULATOR IS REQUIRED AND SHALL INSTALL INSIDE BUILDING. CONTRACTOR SHALL COORDINATE WITH PORT ON REQUIREMENTS FOR WATER METER TO FACILITY.

UTILITY PLAN

SCALE: 1"=20'-0"

1" = 20' 20 0 20 40 scale feet

BID DOCUMENTS

MARK	REVISION DESCRIPTION	BY	APP.	DATE

BergerABAM
33301 9th Avenue South, Suite 300
Federal Way, Washington 98003-2600
(206) 431-2300 Fax: (206) 431-2250

SCOTT BRANILAND STATE OF WASHINGTON STRUCTURAL ENGINEER PROFESSIONAL ENGINEER

DRAWN BY MDB
DESIGN BY VHN
CHECK BY CSB
PROJ MGR CSB

PORT OF GRAYS HARBOR
28TH STREET BOAT LAUNCH IMPROVEMENTS
CONSTRUCTION PHASE II

UTILITY PLAN

DRAWING NO. C-24
PROJECT NO. FAWAT-12-145
DATE: 10/30/17
SHEET NO. 31 OF 48

Last Saved by: Garth.nelson on: Jul 27, 2017 3:03 PM File: Q:\FederalWay\2012\FAWAT-12-145\CADD\Dwgs\Phase_II\P22_C24.dwg

Last Saved on Tue Aug 16 2005 at 10:03AM by Jacob File Name: O:\2006\FAWAT-06-001\CADD\dwgs\C-1.dwg Scale: 1

Copyright © BergerABAM. All Rights Reserved.

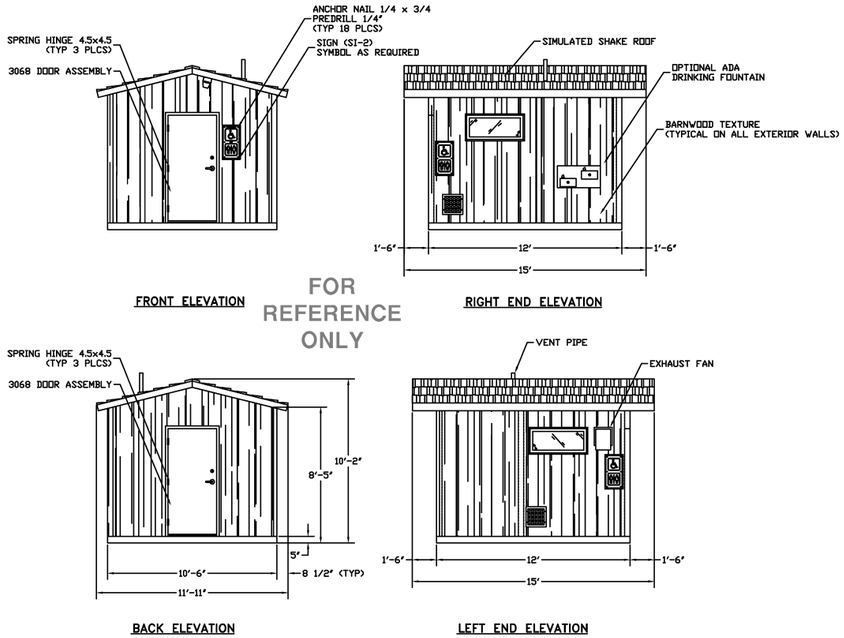

EMBEDDED MATERIALS			
ITEM	QTY	ITEM	QTY
S-2	3		
ANCHOR NAIL 1/4x3/4	18		
3068 DOOR ASSEMBLY	2		
SPRING HINGE 4.5x4.5	6		
CU. FT. CONC.	SQ. FT. S.W.	APPROXIMATE WEIGHT	

Precast Products

PROJECT TITLE
OZARK 1
CXT STANDARD BUILDING

NOTICE

The information contained herein is proprietary and the exclusive property of CXT Incorporated. The information may only be used by the original recipient for the purpose intended. Reproduction or distribution of this information is strictly prohibited without the prior written consent of CXT Incorporated. By allowing use of this information, CXT Incorporated grants no warranty, express or implied, including a warranty of merchantability or of fitness for a particular purpose.

CXT Incorporated

NO.	DESCRIPTION	APPROVAL	DATE
SCALE	1/4"=1'-0"	DATE	03-28-05
DRAWN		FILE NO.	PO-OZ102
CHECKED		PLOT	48

BUILDING ELEVATIONS

DWG NO. OZ 1-02 | SHEET | REV.

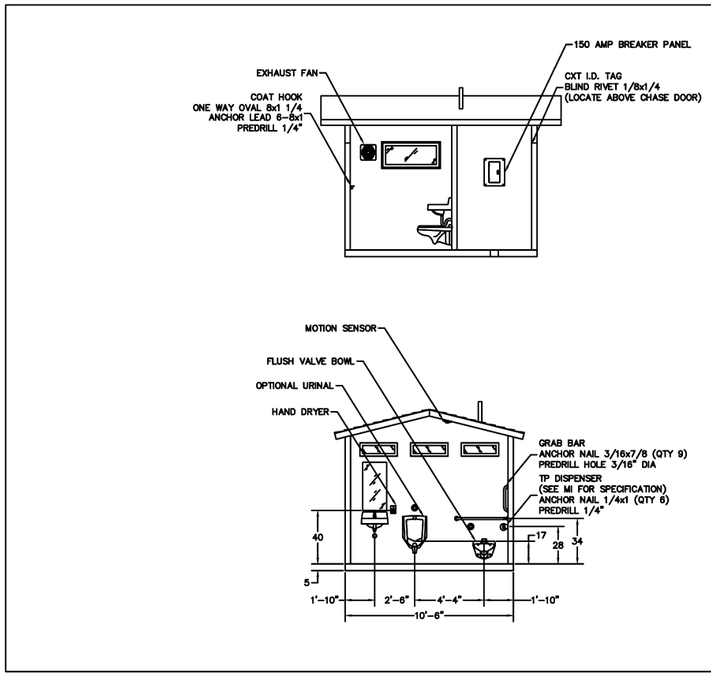

EMBEDDED MATERIALS			
ITEM	QTY	ITEM	QTY
		ONE WAY OVAL 8x1 1/4	2
GRAB BAR	1	ANCHOR LEAD 6-8x1	2
TP DISPENSER	1	BLIND RIVET 1/8x1/4	2
TOILET PAPER ROLL	2-3		
COAT HOOK	1		
DOOR STOP	1		
CXT I.D. TAG	1		
ANCHOR NAIL 1/4x1	6		
ANCHOR NAIL 1/4x3/4	12		
ANCHOR NAIL 3/16x7/8	9		
CU. FT. CONC.	SQ. FT. S.W.	APPROXIMATE WEIGHT	

Precast Products

PROJECT TITLE
OZARK 1
CXT STANDARD BUILDING

NOTICE

The information contained herein is proprietary and the exclusive property of CXT Incorporated. The information may only be used by the original recipient for the purpose intended. Reproduction or distribution of this information is strictly prohibited without the prior written consent of CXT Incorporated. By allowing use of this information, CXT Incorporated grants no warranty, express or implied, including a warranty of merchantability or of fitness for a particular purpose.

CXT Incorporated

NO.	DESCRIPTION	APPROVAL	DATE
SCALE	1/4"=1'-0"	DATE	03-28-05
DRAWN		FILE NO.	PO-OZ103
CHECKED		PLOT	48

INTERIOR ELEVATIONS

DWG NO. OZ 1-03 | SHEET | REV.

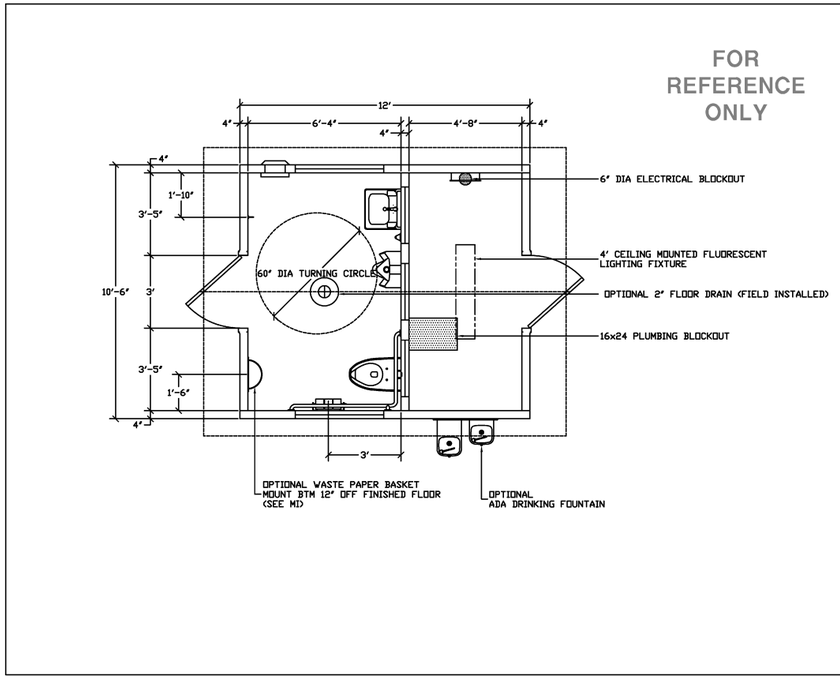

Precast Products

PROJECT TITLE
OZARK 1
CXT STANDARD BUILDING

NOTICE

The information contained herein is proprietary and the exclusive property of CXT Incorporated. The information may only be used by the original recipient for the purpose intended. Reproduction or distribution of this information is strictly prohibited without the prior written consent of CXT Incorporated. By allowing use of this information, CXT Incorporated grants no warranty, express or implied, including a warranty of merchantability or of fitness for a particular purpose.

CXT Incorporated

NO.	DESCRIPTION	APPROVAL	DATE
SCALE	3/8=1'-0"	DATE	03-28-05
DRAWN		FILE NO.	PO-OZ104
CHECKED		PLOT	32

FLOOR PLAN

DWG NO. OZ 1-04 | SHEET | REV.

BID DOCUMENTS

MARK	REVISION DESCRIPTION	BY	APP.	DATE

BergerABAM
33301 9th Avenue South, Suite 300
Federal Way, Washington 98003-2600
(206) 431-2300 Fax: (206) 431-2250

SCOTT BRANLUND STATE OF WASHINGTON REGISTERED PROFESSIONAL ENGINEER

DRAWN BY MDB
DESIGN BY VHN
CHECK BY CSB
PROJ MGR CSB

PORT OF GRAYS HARBOR
28TH STREET BOAT LAUNCH IMPROVEMENTS CONSTRUCTION PHASE II
MISCELLANEOUS DETAILS & SECTIONS - SHEET 1
RESTROOM BUILDING

DRAWING NO. C-25
PROJECT NO. FAWAT-12-145
DATE: 10/30/17
SHEET NO. 32 OF 48

Last Saved by: Garth.nelson on: Jul 27, 2017 3:03 PM File: Q:\FederalWay\2012\FAWAT-12-145\CADD\Dwgs\Phase_II\P22_C25.dwg

Last Saved on Tue Aug 16 2005 at 10:03AM by Jacob File Name: O:\2006\FAWAT-06-001\CADD\dwgs\C-1.dwg Scale: 1

Copyright © BergerABAM. All Rights Reserved.

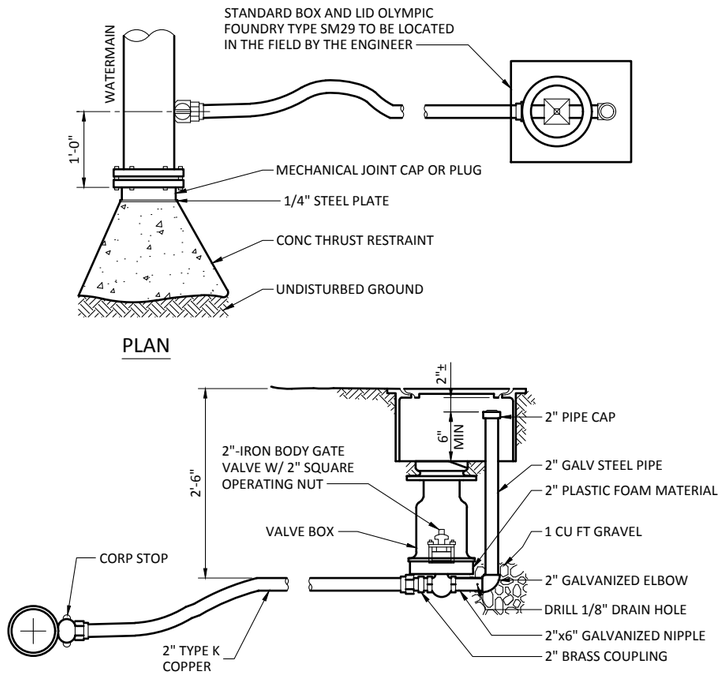

1 DETAIL - BLOWOFF ASSEMBLY

SCALE: 1"=1'-0"

BID DOCUMENTS

MARK	REVISION DESCRIPTION	BY	APP.	DATE

BergerABAM
33301 9th Avenue South, Suite 300
Federal Way, Washington 98003-2600
(206) 431-2300 Fax: (206) 431-2250

SCOTT BRANDLAND
STATE OF WASHINGTON
STRUCTURAL ENGINEER
PROFESSIONAL ENGINEER
Scott Brandland 10/30/17

DRAWN BY MDB
DESIGN BY VHN
CHECK BY CSB
PROJ MGR CSB

PORT OF GRAYS HARBOR
28TH STREET BOAT LAUNCH IMPROVEMENTS
CONSTRUCTION PHASE II

MISCELLANEOUS DETAILS & SECTIONS - SHEET 2
UTILITY DETAILS

DRAWING NO. **C-26**
PROJECT NO. FAWAT-12-145
DATE: 10/30/17
SHEET NO. 33 OF 48

Last Saved by: Garth.nelson on: Jul 27, 2017 3:04 PM File: Q:\FederalWay\2012\FAWAT-12-145\CADD\Dwgs\Phase_II\P22_C26.dwg

Last Saved on Tue Aug 16 2005 at 10:03AM by Jacob File Name: O:\2006\FAWAT-06-021\CADD\dwgs\C-1.dwg Scale: 1

Copyright © BergerABAM. All Rights Reserved.

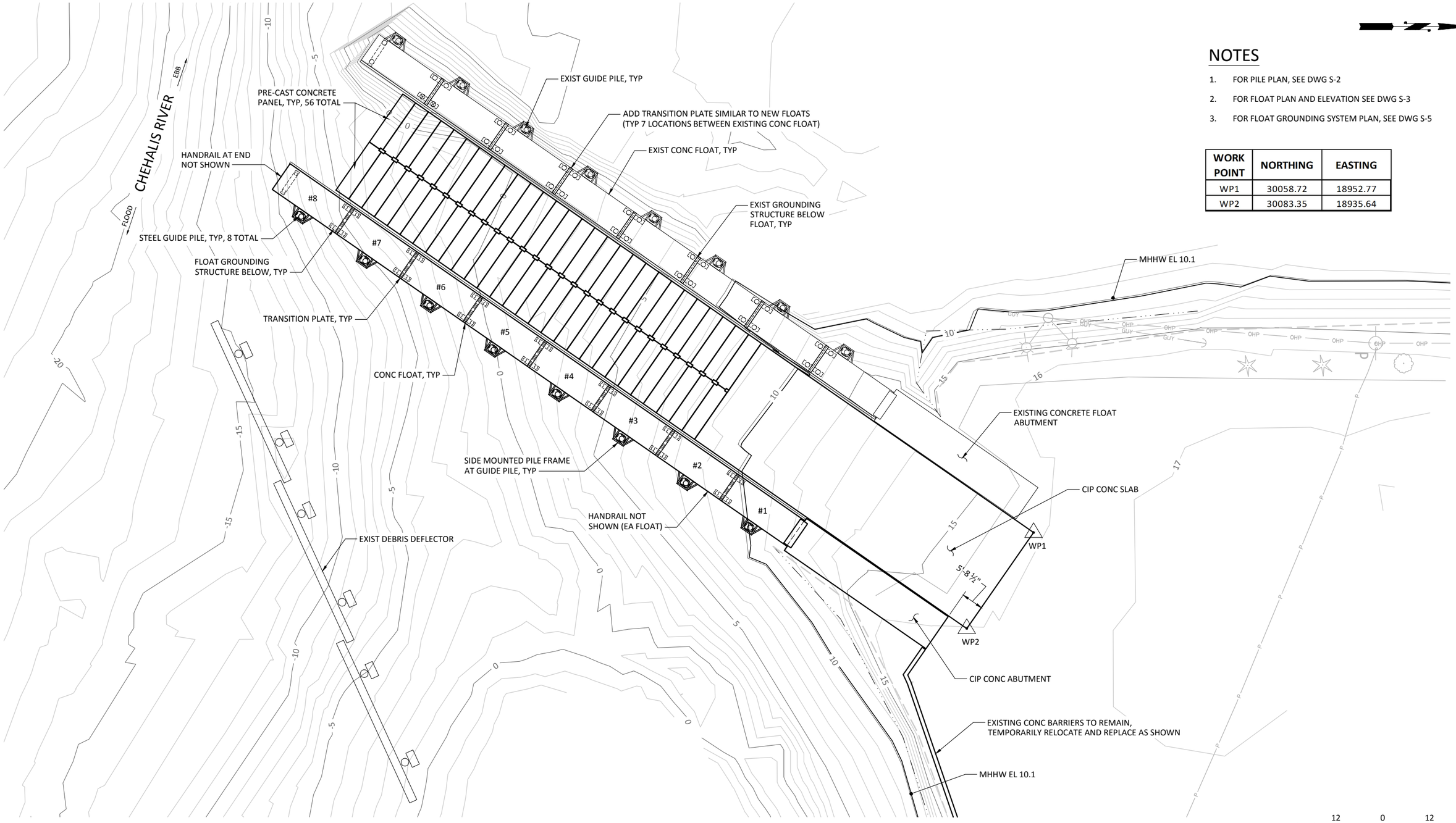

NOTES

1. FOR PILE PLAN, SEE DWG S-2
2. FOR FLOAT PLAN AND ELEVATION SEE DWG S-3
3. FOR FLOAT GROUNDING SYSTEM PLAN, SEE DWG S-5

WORK POINT	NORTHING	EASTING
WP1	30058.72	18952.77
WP2	30083.35	18935.64

1" = 12' scale 12 0 12 24 feet

BID DOCUMENTS

MARK	REVISION DESCRIPTION	BY	APP.	DATE

BergerABAM
33301 9th Avenue South, Suite 300
Federal Way, Washington 98003-2600
(206) 431-2300 Fax: (206) 431-2250

SCOTT BRANDLAND STATE OF WASHINGTON 38766 PROFESSIONAL ENGINEER

DRAWN BY MDB
DESIGN BY GDN
CHECK BY CSB
PROJ MGR CSB

PORT OF GRAYS HARBOR
28TH STREET BOAT LAUNCH IMPROVEMENTS
CONSTRUCTION PHASE II

MARINE SITE PLAN

DRAWING NO. S-1
PROJECT NO. FAWAT-12-145
DATE: 10/30/17
SHEET NO. 34 OF 48

Last Saved by: Garth.nelson on Jul 27, 2017 3:04 PM File: Q:\FederalWay\2012\FAWAT-12-145\CADD\Dwgs\Phase_II\P23_S01.dwg

Copyright © BergerABAM. All Rights Reserved.

TABLE FOR STEEL PIPE PILES

PILE	TYPE	SIZE	NORTHING	EASTING	CUT-OFF ELEV	MIN TIP ELEV
GP1	STEEL PIPE	16" x 5/8"	30057.47	18880.06	20	-28
GP2	STEEL PIPE	16" x 5/8"	30046.07	18863.63	20	-29.75
GP3	STEEL PIPE	16" x 5/8"	30034.67	18847.20	20	-32.25
GP4	STEEL PIPE	16" x 5/8"	30023.27	18830.76	20	-34
GP5	STEEL PIPE	16" x 5/8"	30011.87	18814.33	20	-38
GP6	STEEL PIPE	16" x 5/8"	30000.47	18797.90	20	-34.75
GP7	STEEL PIPE	16" x 5/8"	29989.07	18781.47	20	-43
GP8	STEEL PIPE	16" x 5/8"	29977.67	18765.03	20	-46.75
GSS01	STEEL PIPE	10" x 3/8"	30050.57	18874.50	11	-20
GSS02	STEEL PIPE	10" x 3/8"	30045.64	18877.92	11	-20
GSS03	STEEL PIPE	10" x 3/8"	30048.58	18871.63	11.5	-19.5
GSS04	STEEL PIPE	10" x 3/8"	30043.65	18875.05	11.5	-19.5
GSS05	STEEL PIPE	10" x 3/8"	30039.17	18858.07	9.75	-21.25
GSS06	STEEL PIPE	10" x 3/8"	30034.24	18861.49	9.75	-21.25
GSS07	STEEL PIPE	10" x 3/8"	30037.18	18855.19	9.25	-21.75
GSS08	STEEL PIPE	10" x 3/8"	30032.25	18858.61	9.25	-21.75
GSS09	STEEL PIPE	10" x 3/8"	30027.77	18841.64	6	-25
GSS10	STEEL PIPE	10" x 3/8"	30022.84	18845.06	6	-25
GSS11	STEEL PIPE	10" x 3/8"	30025.78	18838.76	5.5	-25.5
GSS12	STEEL PIPE	10" x 3/8"	30020.85	18842.18	5.5	-25.5
GSS13	STEEL PIPE	10" x 3/8"	30016.37	18825.21	3.5	-27.5
GSS14	STEEL PIPE	10" x 3/8"	30011.44	18828.63	3.5	-27.5
GSS15	STEEL PIPE	10" x 3/8"	30014.38	18822.33	3	-28
GSS16	STEEL PIPE	10" x 3/8"	30009.45	18825.75	3	-28
GSS17	STEEL PIPE	10" x 3/8"	30004.97	18808.77	1.25	-29.75
GSS18	STEEL PIPE	10" x 3/8"	30000.04	18812.19	1.25	-29.75
GSS19	STEEL PIPE	10" x 3/8"	30002.98	18805.89	0.25	-30.75
GSS20	STEEL PIPE	10" x 3/8"	29998.05	18809.31	0.25	-30.75
GSS21	STEEL PIPE	10" x 3/8"	29993.57	18792.34	-2.75	-33.75
GSS22	STEEL PIPE	10" x 3/8"	29988.64	18795.76	-2.75	-33.75
GSS23	STEEL PIPE	10" x 3/8"	29991.58	18789.46	-2.25	-33.25
GSS24	STEEL PIPE	10" x 3/8"	29986.65	18792.88	-2.25	-33.25
GSS25	STEEL PIPE	10" x 3/8"	29982.17	18775.91	-3.25	-34.25
GSS26	STEEL PIPE	10" x 3/8"	29977.24	18779.33	-3.25	-34.25
GSS27	STEEL PIPE	10" x 3/8"	29980.18	18773.03	-3	-34
GSS28	STEEL PIPE	10" x 3/8"	29975.25	18776.45	-3	-34
GSS29	STEEL PIPE	10" x 3/8"	29971.20	18760.53	-7	-38
GSS30	STEEL PIPE	10" x 3/8"	29966.68	18763.67	-7	-38

1" = 12'

12 0 12 24
scale feet

BID DOCUMENTS

MARK	REVISION DESCRIPTION	BY	APP.	DATE

BergerABAM
33301 9th Avenue South, Suite 300
Federal Way, Washington 98003-2600
(206) 431-2300 Fax: (206) 431-2250

SCOTT BRANLUND
STATE OF WASHINGTON
REGISTERED PROFESSIONAL ENGINEER
10/30/17

DRAWN BY MDB
DESIGN BY GDN
CHECK BY CSB
PROJ MGR CSB

PORT OF GRAYS HARBOR
28TH STREET BOAT LAUNCH IMPROVEMENTS
CONSTRUCTION PHASE II

MARINE PILE PLAN

DRAWING NO. **S-2**
PROJECT NO. FAWAT-12-145
DATE: 10/30/17
SHEET NO. 35 OF 48

Last Saved by: Garth.nelson on Jul 27, 2017 3:04 PM File: Q:\FederalWay\2012\FAWAT-12-145\CADD\Dwgs\Phase_II\P23_S02.dwg

Copyright © BergerABAM. All Rights Reserved.

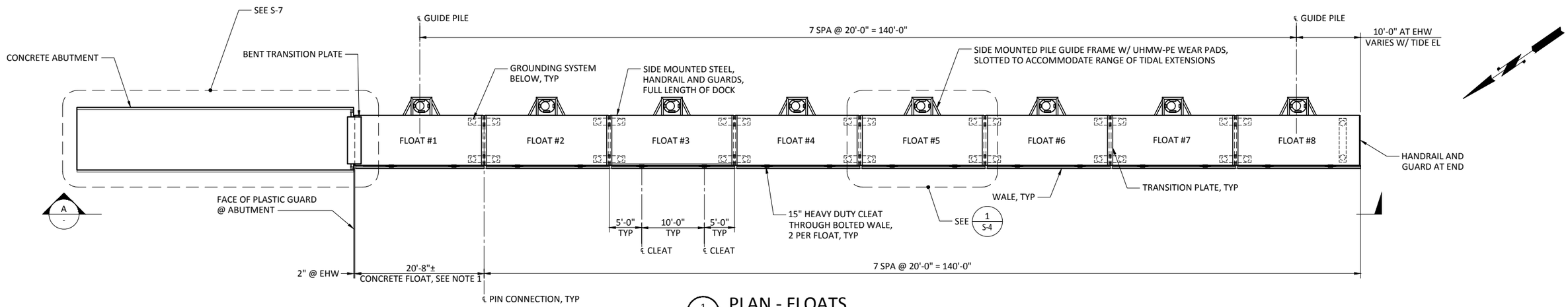

1 S-1 PLAN - FLOATS
SCALE: 1"=8'-0"

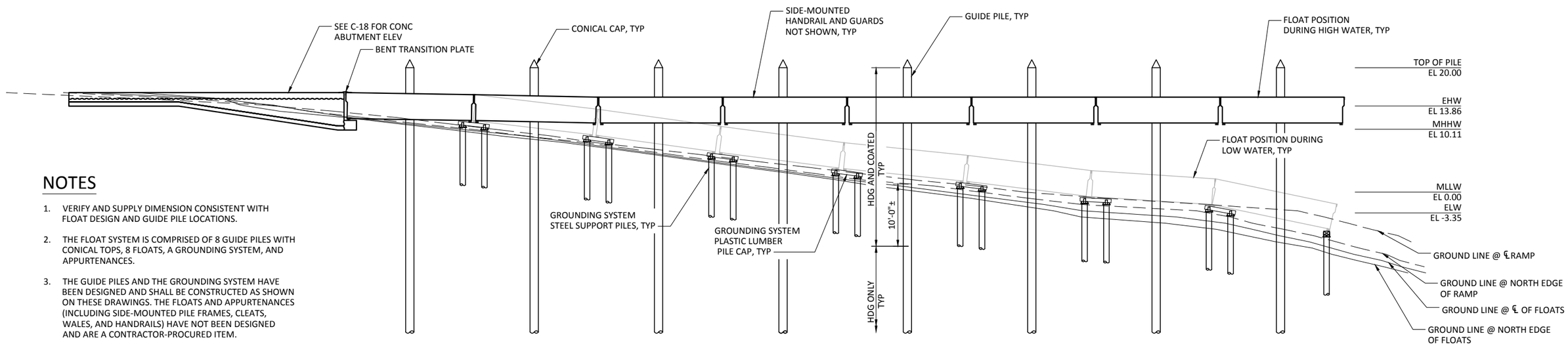

A - ELEVATION
SCALE: 1"=8'-0"

NOTES

1. VERIFY AND SUPPLY DIMENSION CONSISTENT WITH FLOAT DESIGN AND GUIDE PILE LOCATIONS.
2. THE FLOAT SYSTEM IS COMPRISED OF 8 GUIDE PILES WITH CONICAL TOPS, 8 FLOATS, A GROUNDING SYSTEM, AND APPURTENANCES.
3. THE GUIDE PILES AND THE GROUNDING SYSTEM HAVE BEEN DESIGNED AND SHALL BE CONSTRUCTED AS SHOWN ON THESE DRAWINGS. THE FLOATS AND APPURTENANCES (INCLUDING SIDE-MOUNTED PILE FRAMES, CLEATS, WALES, AND HANDRAILS) HAVE NOT BEEN DESIGNED AND ARE A CONTRACTOR-PROCURED ITEM.
4. DESIGN, FURNISH, AND INSTALL FLOATS, COMPLETE WITH ALL APPURTENANCES, THAT SATISFY THE REQUIREMENTS OF THEIR INTENDED FUNCTION, THESE DRAWINGS, AND THE PERFORMANCE SPECIFICATIONS.
5. THE FLOATS SHALL BE COMPATIBLE WITH THE GUIDE PILES, GROUNDING SYSTEM, AND ABUTMENT.
6. ALLOW ADEQUATE GAP BETWEEN HANDRAIL SECTIONS TO ACCOMMODATE ARTICULATION OF DOCK THROUGH EXTREME TIDES PLUS 3 FOOT WAVES.

1" = 8' 8 0 8 16
scale feet

BID DOCUMENTS

MARK	REVISION DESCRIPTION	BY	APP.	DATE

BergerABAM
33301 9th Avenue South, Suite 300
Federal Way, Washington 98003-2600
(206) 431-2300 Fax: (206) 431-2250

SCOTT BRANLUND STATE OF WASHINGTON STRUCTURAL ENGINEER PROFESSIONAL ENGINEER
SEE COVER
OCT 2017

DRAWN BY MDB
DESIGN BY GDN
CHECK BY CSB
PROJ MGR CSB

PORT OF GRAYS HARBOR
28TH STREET BOAT LAUNCH IMPROVEMENTS
CONSTRUCTION PHASE II

FLOAT/ABUTMENT PLAN AND SECTIONS

DRAWING NO. S-3
PROJECT NO. FAWAT-12-145
DATE: 10/30/17
SHEET NO. 36 OF 48

Last Saved by: Garth.nelson on: Jul27, 2017 3:04 PM File: Q:\FederalWay\2012\FAWAT-12-145\CADD\Dwgs\Phase_II\P23_S03.dwg

Copyright © BergerABAM. All Rights Reserved.

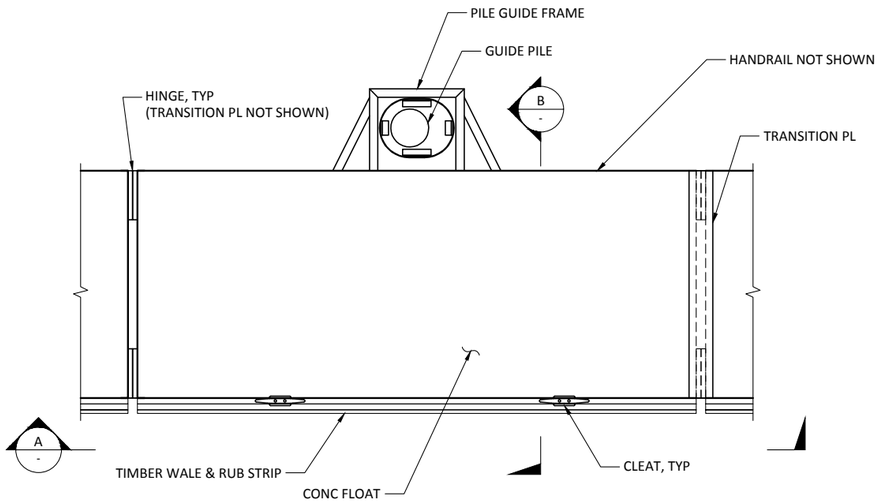

1 / S-3 PLAN - TYPICAL FLOAT
SCALE: 3/8"=1'-0"

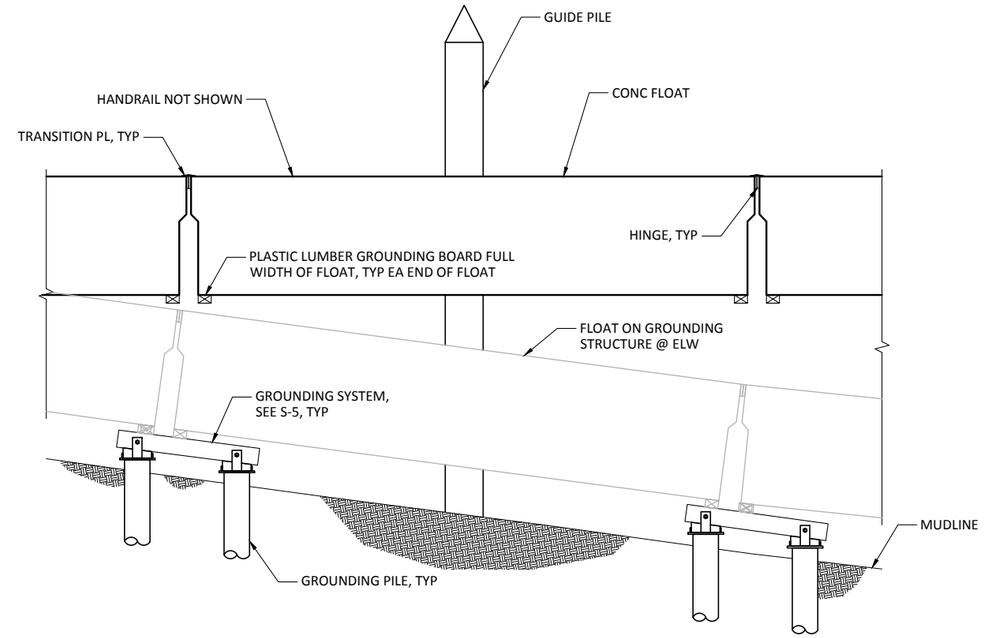

A / - ELEVATION - TYPICAL FLOAT
SCALE: 3/8"=1'-0"

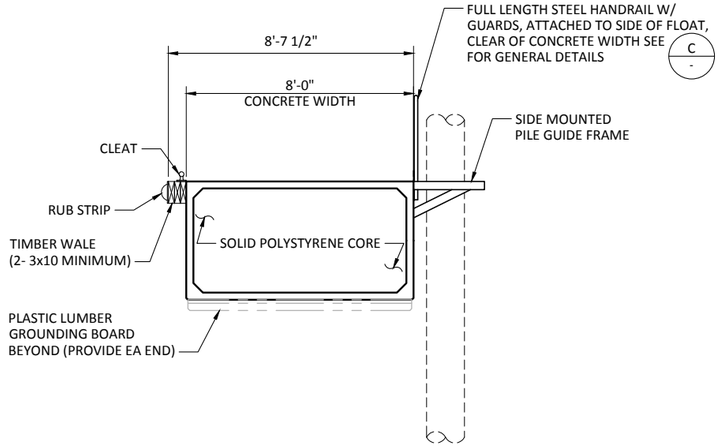

B / - SECTION - TYPICAL FLOAT
SCALE: 3/8"=1'-0"

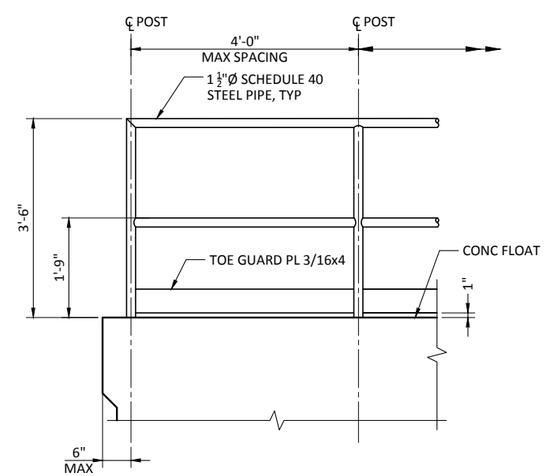

C / - DETAIL - GENERAL HANDRAIL LAYOUT
SCALE: 3/4"=1'-0"

3/8" = 1'-0" 2 0 2 4 scale feet

3/4" = 1'-0" 1 0 1 2 scale feet

BID DOCUMENTS

MARK	REVISION DESCRIPTION	BY	APP.	DATE

BergerABAM
33301 9th Avenue South, Suite 300
Federal Way, Washington 98003-2600
(206) 431-2300 Fax: (206) 431-2250

SCOTT BRANLUND STATE OF WASHINGTON STRUCTURAL ENGINEER PROFESSIONAL ENGINEER

DRAWN BY MDB
DESIGN BY GDN
CHECK BY CSB
PROJ MGR CSB

PORT OF GRAYS HARBOR
28TH STREET BOAT LAUNCH IMPROVEMENTS
CONSTRUCTION PHASE II

FLOAT PLAN AND SECTIONS

DRAWING NO. **S-4**
PROJECT NO. FAWAT-12-145
DATE: 10/30/17
SHEET NO. 37 OF 48

Last Saved by: Garth.nelson on: Jul 27, 2017 3:04 PM File: Q:\FederalWay\2012\FAWAT-12-145\CADD\Dwgs\Phase_II\P23_S04.dwg

Copyright © BergerABAM. All Rights Reserved.

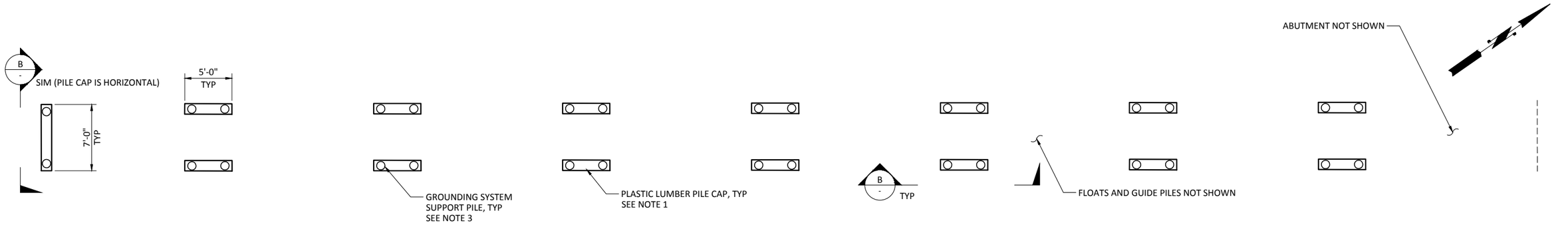

1 / S-1 PLAN - FLOAT GROUNDING SYSTEM

SCALE: 3/16 = 1'-0"

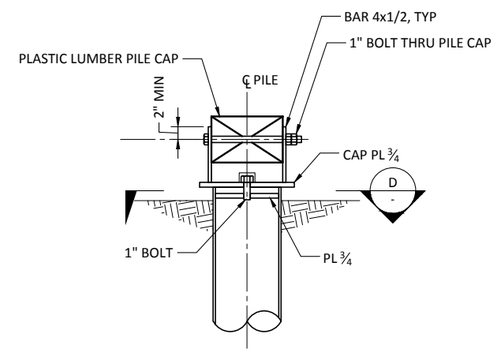

C / - SECTION

SCALE: 1" = 1'-0"

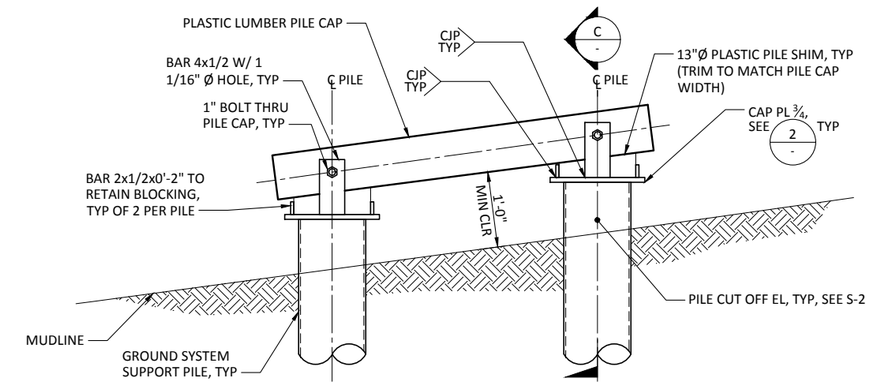

B / - ELEVATION - PILE CAP AT STEEL PILES

SCALE: 1" = 1'-0"

NOTES

1. ALL PLASTIC LUMBER SHALL BE BLACK PLASTIC. SEE SPECIFICATIONS.
2. TRIM AND/OR SHIM PILE TOPS TO PROVIDE A SNUG FIT WITH COMPLETE BEARING OF THE PILE CAP. COAT PILE TOPS IN ACCORDANCE WITH THE SPECIFICATIONS.
3. PROVIDE COATING ON THE UPPER 5 FEET OF EACH GROUNDING SYSTEM SUPPORT PILE.

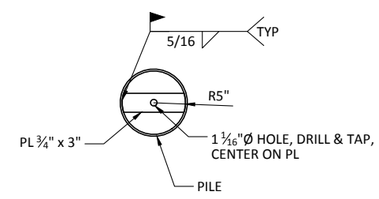

D / - SECTION

SCALE: 1" = 1'-0"

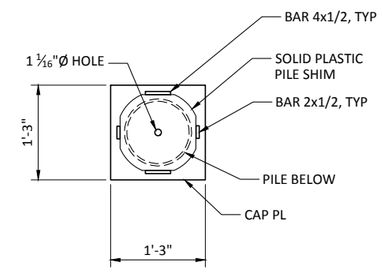

2 / - DETAIL - CAP PLATE AT STEEL PILES

SCALE: 1" = 1'-0"

3/16" = 1'-0" 4 0 4 8 scale feet

1" = 1'-0" 1 0 1 2 scale feet

BID DOCUMENTS

MARK	REVISION DESCRIPTION	BY	APP.	DATE

BergerABAM
33301 9th Avenue South, Suite 300
Federal Way, Washington 98003-2600
(206) 431-2300 Fax: (206) 431-2250

SCOTT BRANLUND STATE OF WASHINGTON REGISTERED PROFESSIONAL ENGINEER

DRAWN BY MDB
DESIGN BY GDN
CHECK BY CSB
PROJ MGR CSB

PORT OF GRAYS HARBOR
28TH STREET BOAT LAUNCH IMPROVEMENTS
CONSTRUCTION PHASE II

GROUNDING SYSTEM PLAN, DETAILS AND FLOAT SECTIONS

DRAWING NO. S-5
PROJECT NO. FAWAT-12-145
DATE: 10/30/17
SHEET NO. 38 OF 48

Last Saved by: Garth.nelson on: Jul 27, 2017 3:04 PM File: Q:\FederalWay\2012\FAWAT-12-145\CADD\Dwgs\Phase_II\P23_S05.dwg

Copyright © BergerABAM. All Rights Reserved.

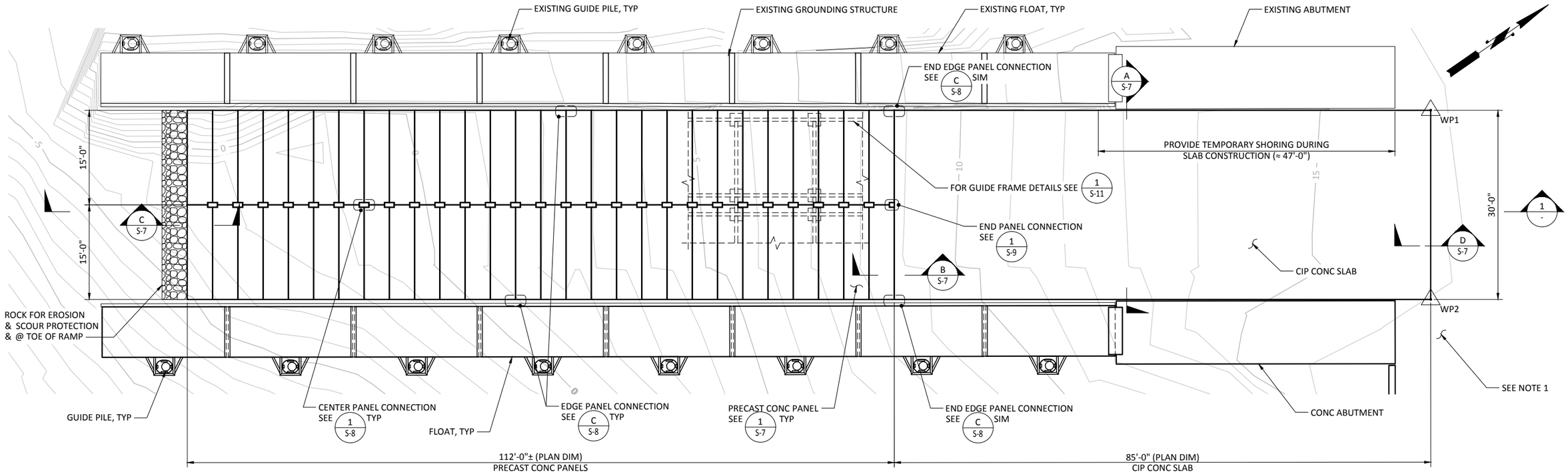

1 S-1 PLAN - BOAT RAMP
SCALE: 1/8"=1'-0"

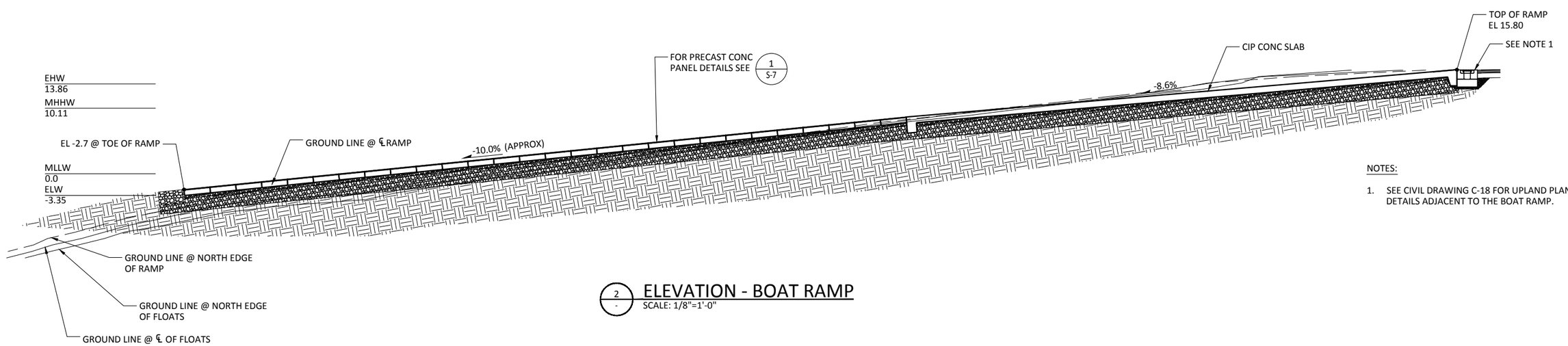

NOTES:

1. SEE CIVIL DRAWING C-18 FOR UPLAND PLANS AND DETAILS ADJACENT TO THE BOAT RAMP.

2 - ELEVATION - BOAT RAMP
SCALE: 1/8"=1'-0"

BID DOCUMENTS

MARK	REVISION DESCRIPTION	BY	APP.	DATE

BergerABAM
33301 9th Avenue South, Suite 300
Federal Way, Washington 98003-2600
(206) 431-2300 Fax: (206) 431-2250

SCOTT BRANLUND STATE OF WASHINGTON STRUCTURAL ENGINEER PROFESSIONAL ENGINEER
Scott Branlund Oct 2017

DRAWN BY MDB
DESIGN BY GDN
CHECK BY CSB
PROJ MGR CSB

PORT OF GRAYS HARBOR
28TH STREET BOAT LAUNCH IMPROVEMENTS
CONSTRUCTION PHASE II

BOAT RAMP PLAN AND ELEVATIONS

DRAWING NO. S-6
PROJECT NO. FAWAT-12-145
DATE: 10/30/17
SHEET NO. 39 OF 48

Last Saved by: Garth.nelson on: Oct 31, 2017 8:46 AM File: Q:\FederalWay\2012\FAWAT-12-145\CADD\Dwgs\Phase_II\P23_S06.dwg

Copyright © BergerABAM. All Rights Reserved.

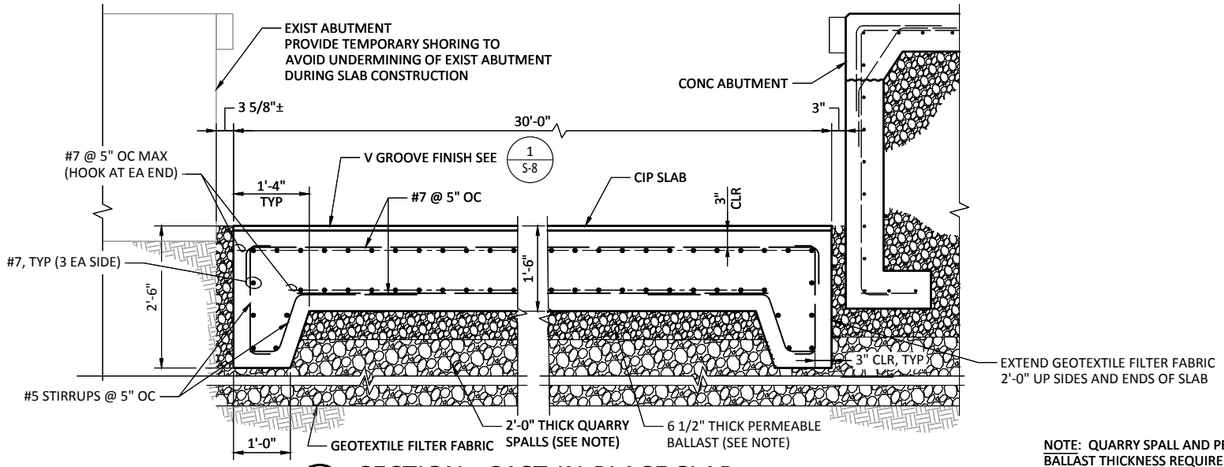

A S-6 SECTION - CAST-IN-PLACE SLAB
SCALE: 3/4"=1'-0"

NOTE: QUARRY SPALL AND PERMEABLE BALLAST THICKNESS REQUIREMENTS WILL BE REVIEWED BY THE ENGINEER AT START OF CONSTRUCTION. SEE SPECIFICATIONS.

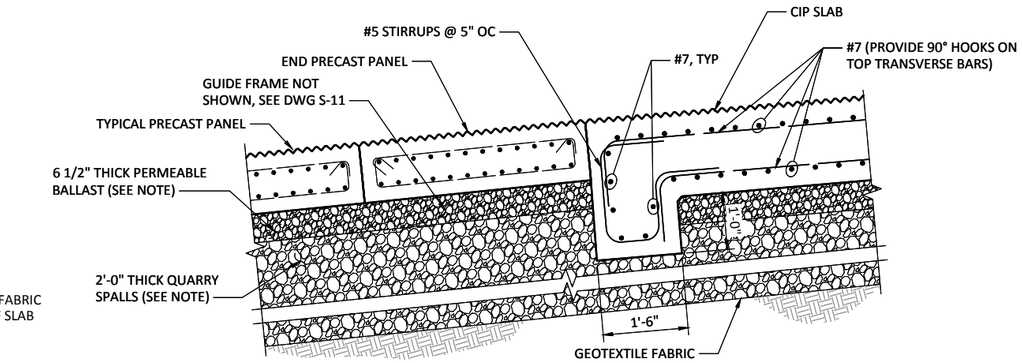

B S-6 SECTION - CAST-IN-PLACE TO PRECAST TRANSITION
SCALE: 3/4"=1'-0"

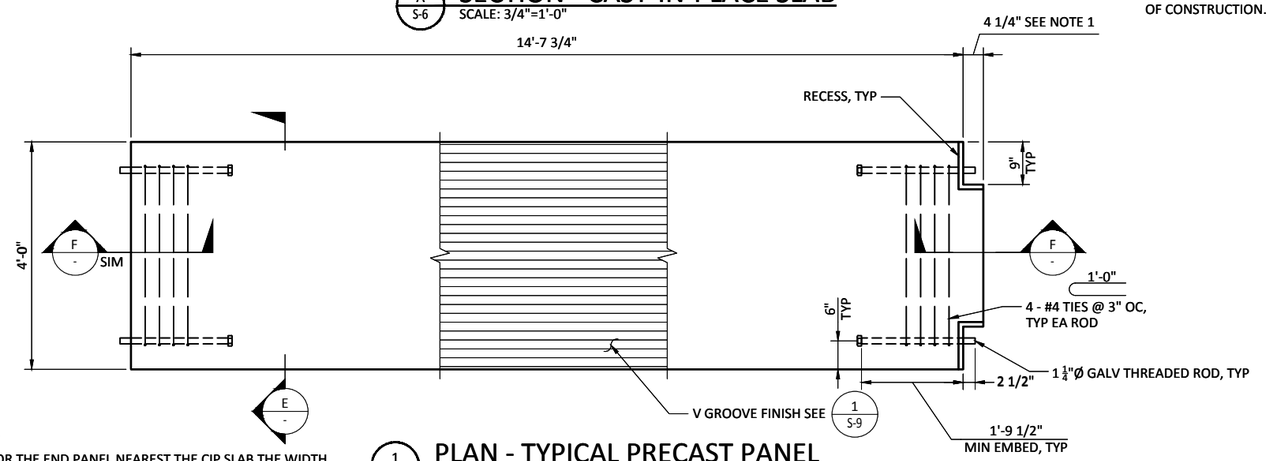

NOTE:

1. FOR THE END PANEL NEAREST THE CIP SLAB THE WIDTH OF THE BLOCKOUT SHALL BE 8 "

1 S-6 PLAN - TYPICAL PRECAST PANEL
SCALE: 3/4"=1'-0"

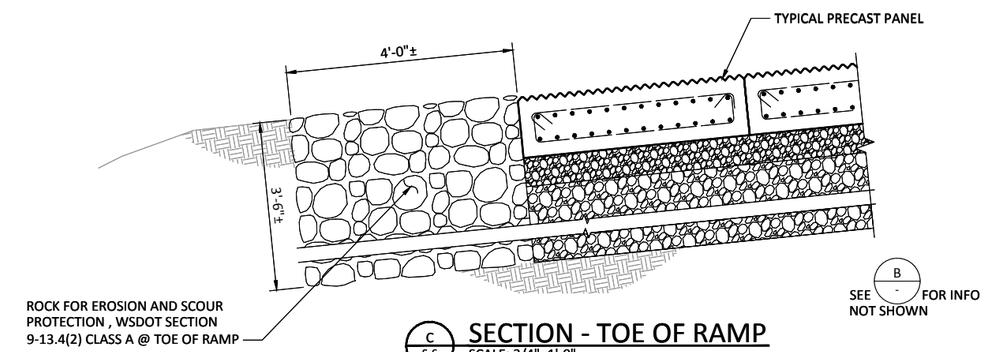

C S-6 SECTION - TOE OF RAMP
SCALE: 3/4"=1'-0"

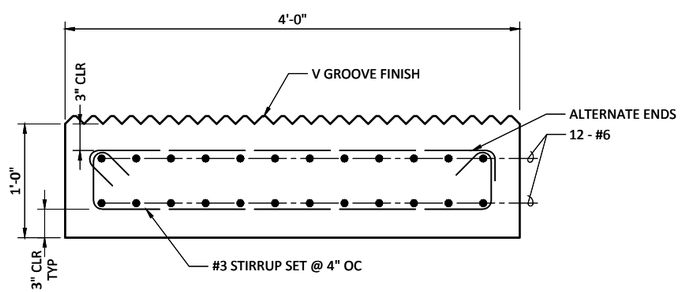

E - SECTION - TYPICAL PRECAST PANEL
SCALE: 1 1/2"=1'-0"

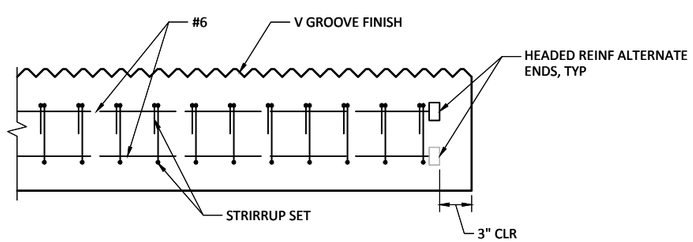

F S-6 SECTION - END PRECAST PANEL
SCALE: 1 1/2"=1'-0"

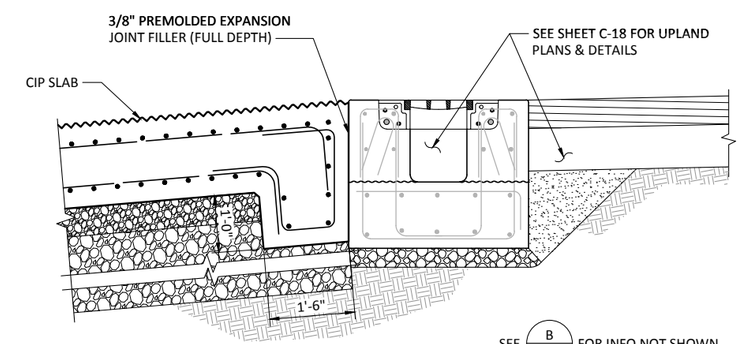

D S-6 SECTION - TOP OF RAMP
SCALE: 3/4"=1'-0"

BID DOCUMENTS

MARK	REVISION DESCRIPTION	BY	APP.	DATE

BergerABAM
33301 9th Avenue South, Suite 300
Federal Way, Washington 98003-2600
(206) 431-2300 Fax: (206) 431-2250

SCOTT BRANLUND STATE OF WASHINGTON REGISTERED PROFESSIONAL ENGINEER

DRAWN BY MDB
DESIGN BY GDN
CHECK BY CSB
PROJ MGR CSB

PORT OF GRAYS HARBOR
28TH STREET BOAT LAUNCH IMPROVEMENTS
CONSTRUCTION PHASE II

BOAT RAMP SECTIONS AND DETAILS

DRAWING NO. S-7
PROJECT NO. FAWAT-12-145
DATE: 10/30/17
SHEET NO. 40 OF 48

Last Saved by: Garth.nelson on: Jul27, 2017 3:04 PM File: Q:\FederalWay\2012\FAWAT-12-145\CADD\Dwgs\Phase_II\P23_S07.dwg

Copyright © BergerABAM. All Rights Reserved.

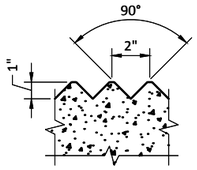

NOTES:

1. V-GROOVE FINISH FOR PRECAST PANELS AND CAST IN PLACE SLAB SHALL BE ANGLED AT 30 DEGREES FROM THE PERPENDICULAR OF THE LAUNCH RAMP.
2. V-GROOVES SHALL BE ORIENTED IN THE DOWNSTREAM DIRECTION DURING EBB TIDES.

1 / S-7 DETAIL - V-GROOVE FINISH
SCALE: 3"=1'-0"

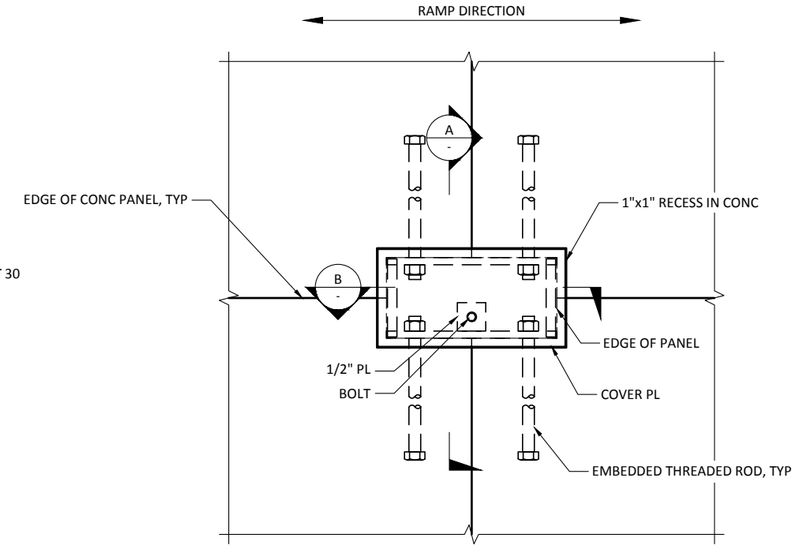

2 / S-6 PLAN - PANEL CONNECTION
SCALE: 1 1/2"=1'-0"

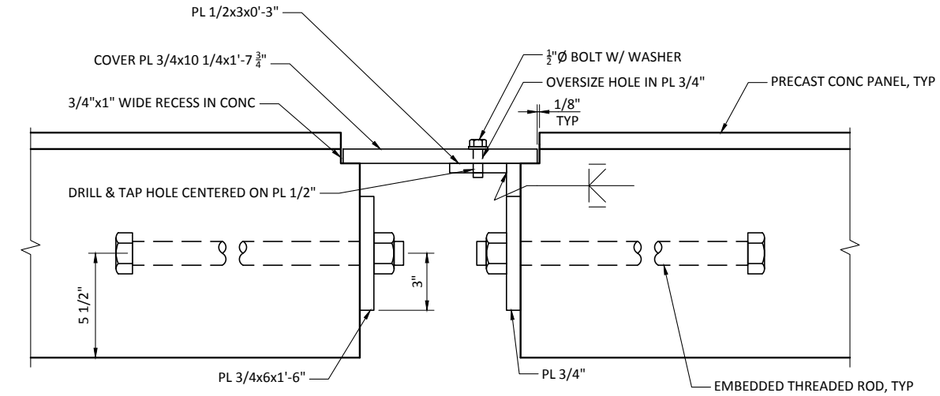

A / - SECTION - CENTER PANEL CONNECTION
SCALE: 3"=1'-0"

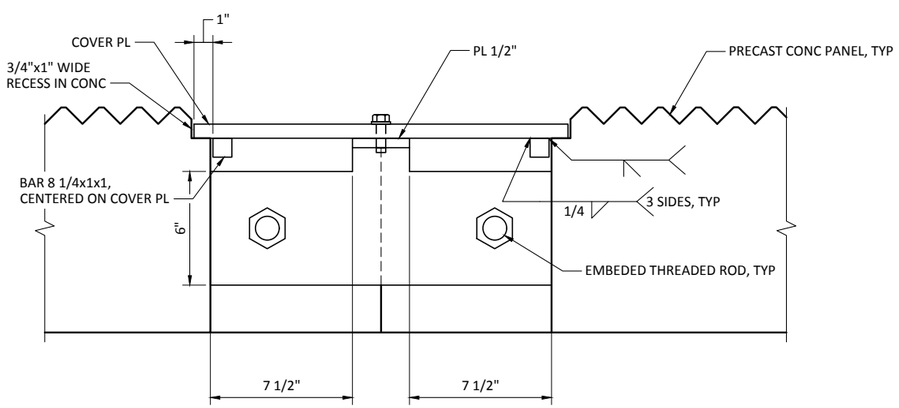

B / - SECTION - CENTER PANEL CONNECTION
SCALE: 3"=1'-0"

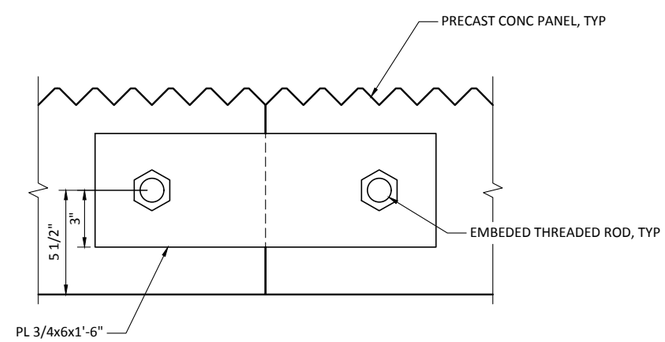

C / S-6 SECTION - EDGE PANEL CONNECTION
SCALE: 3"=1'-0"

BID DOCUMENTS

MARK	REVISION DESCRIPTION	BY	APP.	DATE

BergerABAM
33301 9th Avenue South, Suite 300
Federal Way, Washington 98003-2600
(206) 431-2300 Fax: (206) 431-2250

SCOTT BRANDLAND STATE OF WASHINGTON STRUCTURAL ENGINEER PROFESSIONAL ENGINEER

DRAWN BY MDB
DESIGN BY GDN
CHECK BY CSB
PROJ MGR CSB

PORT OF GRAYS HARBOR
28TH STREET BOAT LAUNCH IMPROVEMENTS
CONSTRUCTION PHASE II

BOAT RAMP DETAILS - SHEET 1

DRAWING NO. S-8
PROJECT NO. FAWAT-12-145
DATE: 10/30/17
SHEET NO. 41 OF 48

Last Saved by: Garth.nelson on: Jul 27, 2017 3:04 PM File: Q:\FederalWay\2012\FAWAT-12-145\CADD\Dwgs\Phase_II\P23_S08.dwg

Copyright © BergerABAM. All Rights Reserved.

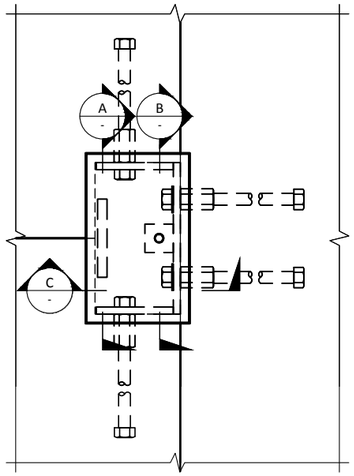

1 / S-6 PLAN - END PANEL CENTER CONNECTION
SCALE: 1 1/2"=1'-0"

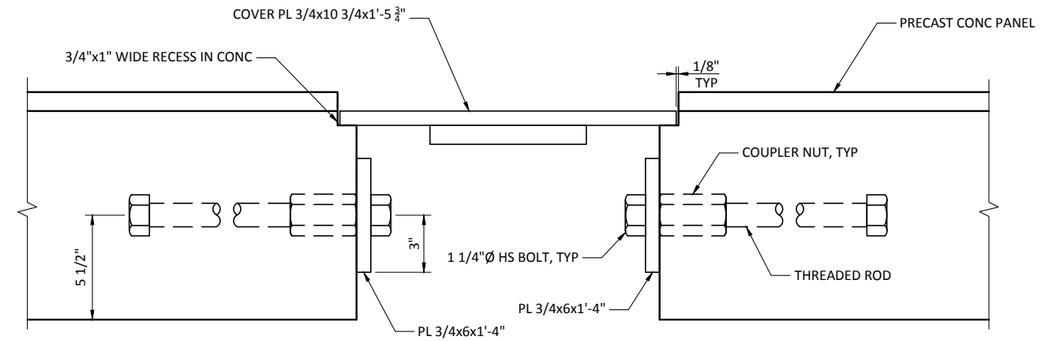

A / - SECTION - CENTER PANEL CONNECTION
SCALE: 3"=1'-0"

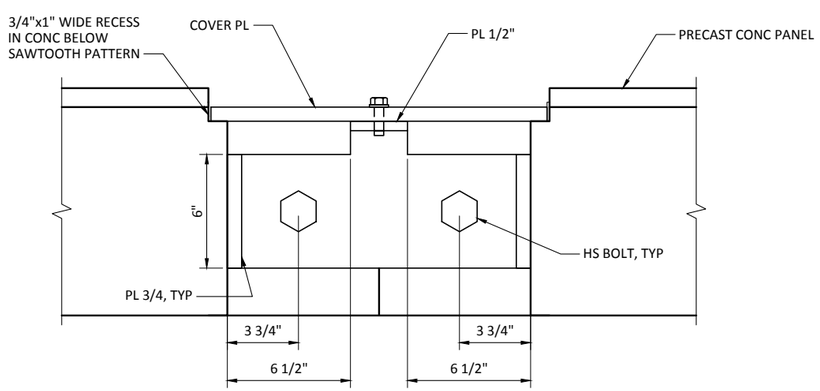

B / - SECTION - CENTER PANEL CONNECTION
SCALE: 3"=1'-0"

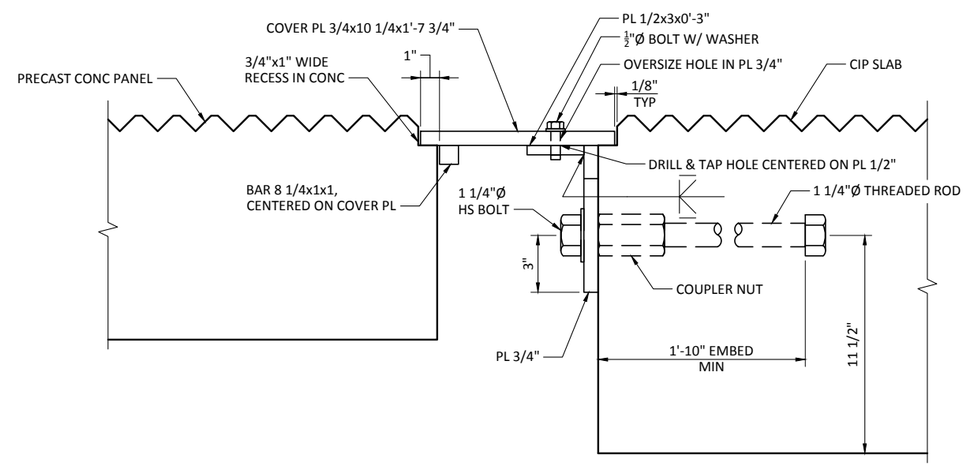

C / - SECTION - CENTER PANEL CONNECTION
SCALE: 3"=1'-0"

NOTES:

1. FOR DETAILS NOT SHOWN SEE DWG S-8

BID DOCUMENTS

MARK	REVISION DESCRIPTION	BY	APP.	DATE

BergerABAM
33301 9th Avenue South, Suite 300
Federal Way, Washington 98003-2600
(206) 431-2300 Fax: (206) 431-2250

SCOTT BRANLUND STATE OF WASHINGTON REGISTERED PROFESSIONAL ENGINEER

DRAWN BY MDB
DESIGN BY GDN
CHECK BY CSB
PROJ MGR CSB

PORT OF GRAYS HARBOR
28TH STREET BOAT LAUNCH IMPROVEMENTS
CONSTRUCTION PHASE II

BOAT RAMP DETAILS - SHEET 2

DRAWING NO. S-9
PROJECT NO. FAWAT-12-145
DATE: 10/30/17
SHEET NO. 42 OF 48

Last Saved by: Garth.nelson on: Jul 27, 2017 3:05 PM File: Q:\FederalWay\2012\FAWAT-12-145\CADD\Dwgs\Phase_II\P23_S09.dwg

Copyright © BergerABAM. All Rights Reserved.

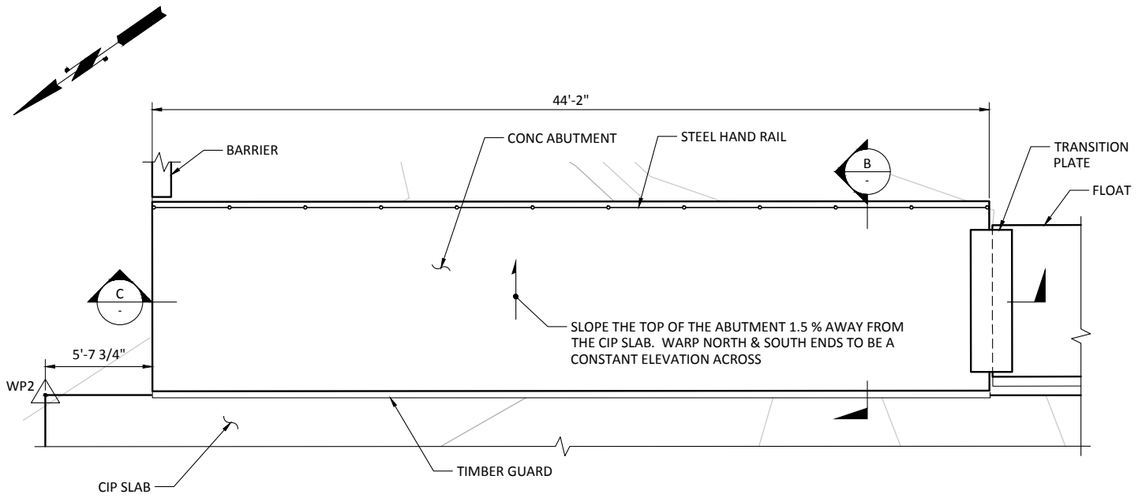

A - PLAN - CONCRETE ABUTMENT
SCALE:

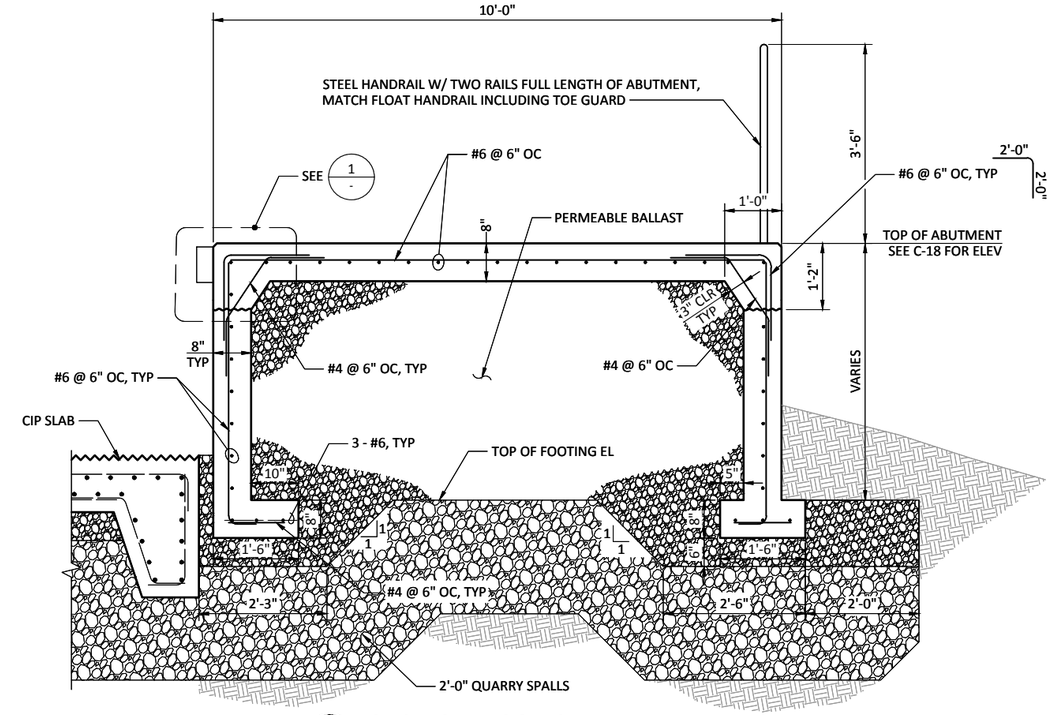

B - SECTION - CONC ABUTMENT
SCALE: 3/4"=1'-0"

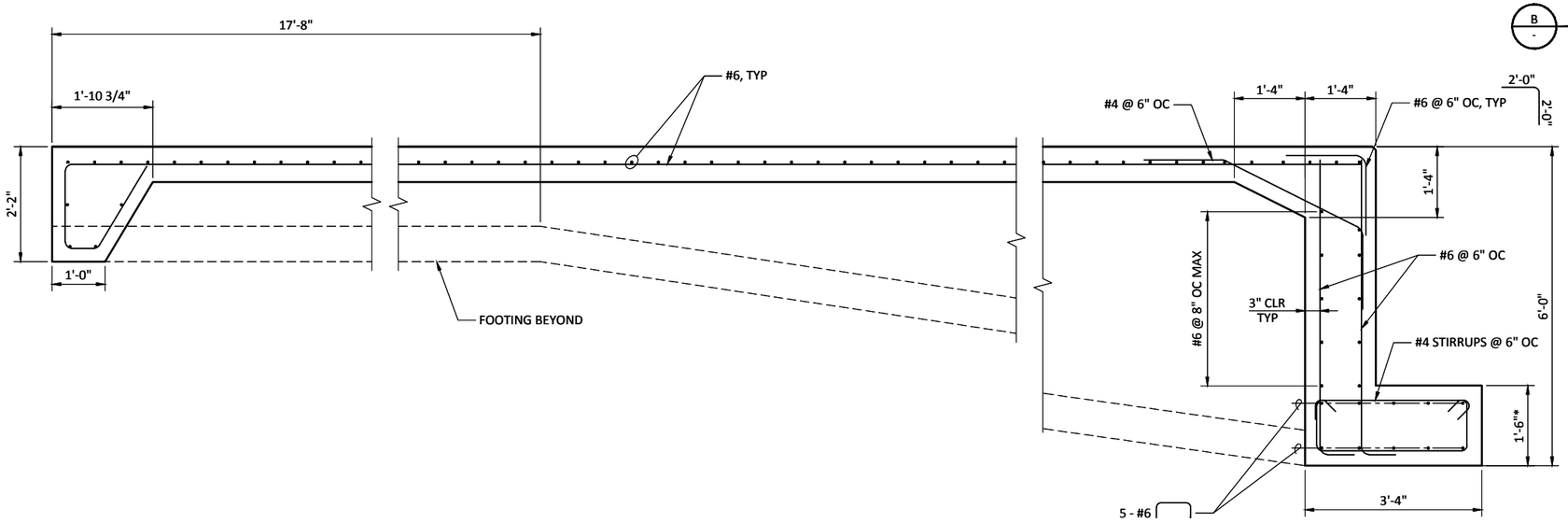

C - SECTION - CONC ABUTMENT
SCALE: 3/4"=1'-0"

NOTE:

* FOOTING HEIGHT MAY VARY DEPENDING ON REQUIRED FLOAT HEIGHT FROM MANUFACTURER.

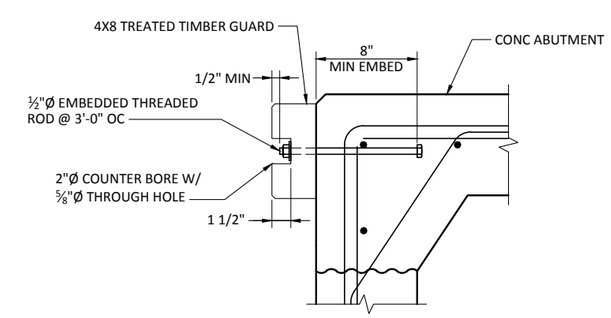

1 - DETAIL - TIMBER GUARD
SCALE:

BID DOCUMENTS

MARK	REVISION DESCRIPTION	BY	APP.	DATE

BergerABAM
33301 9th Avenue South, Suite 300
Federal Way, Washington 98003-2600
(206) 431-2300 Fax: (206) 431-2250

SCOTT BRANLUND — STATE OF WASHINGTON — GENERAL PROFESSIONAL ENGINEER

DRAWN BY MDB
DESIGN BY GDN
CHECK BY CSB
PROJ MGR CSB

PORT OF GRAYS HARBOR
28TH STREET BOAT LAUNCH IMPROVEMENTS
CONSTRUCTION PHASE II

ABUTMENT PLAN AND SECTIONS

DRAWING NO. S-10
PROJECT NO. FAWAT-12-145
DATE: 10/30/17
SHEET NO. 43 OF 48

Last Saved by: Garth.nelson on: Jul 27, 2017 3:05 PM File: Q:\FederalWay\2012\FAWAT-12-145\CADD\Dwgs\Phase_II\P23_S10.dwg

Copyright © BergerABAM. All Rights Reserved.

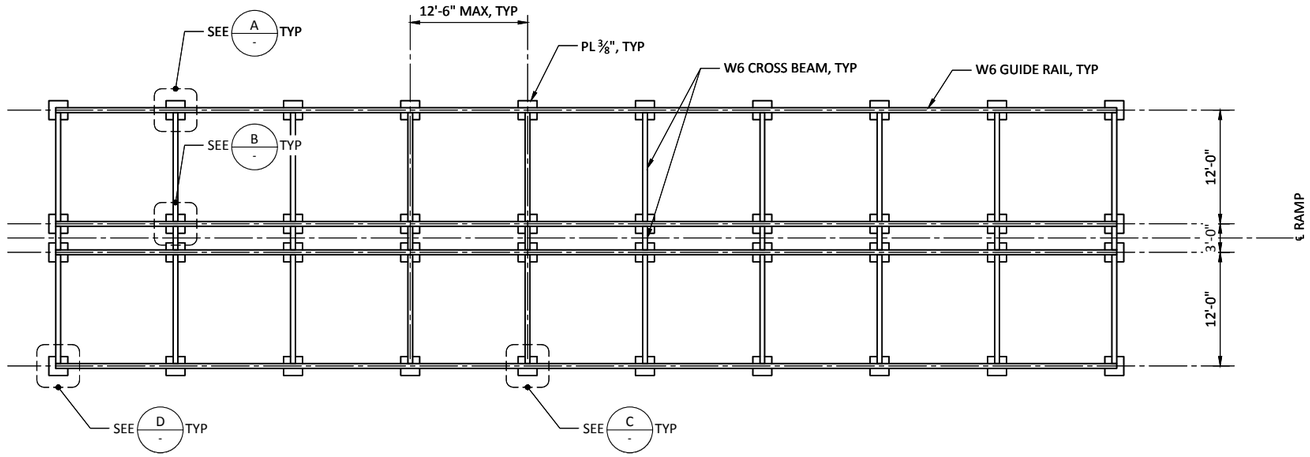

1 PLAN - GUIDE RAIL SYSTEM
SCALE: 1/8"=1'-0"

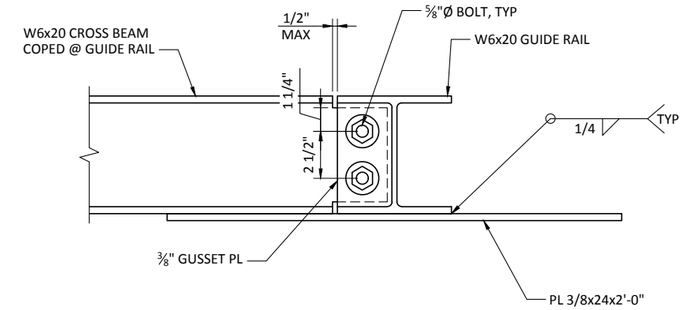

A DETAIL - EDGE CONNECTION
SCALE: 3"=1'-0"

NOTES:

1. SHOP PRIME ALL STEEL, TYPICAL, DO NOT GALVANIZE, USE HDG FASTENERS.
2. CONTRACTOR MAY SUBSTITUTE WELDED CONNECTIONS FOR BOLTED CONNECTIONS.

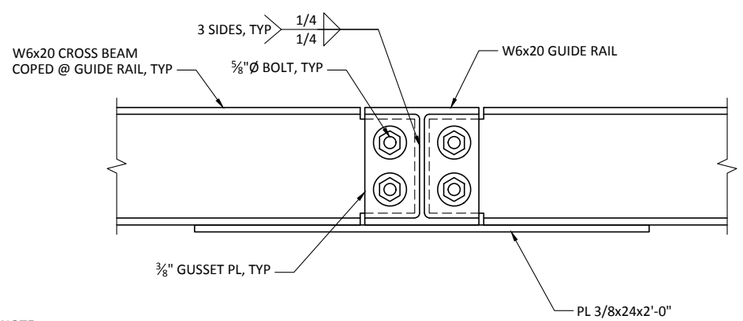

NOTE:

FOR DETAILS NOT SHOWN SEE SECTION A

A DETAIL - TYPICAL CENTER CONNECTION
SCALE: 3"=1'-0"

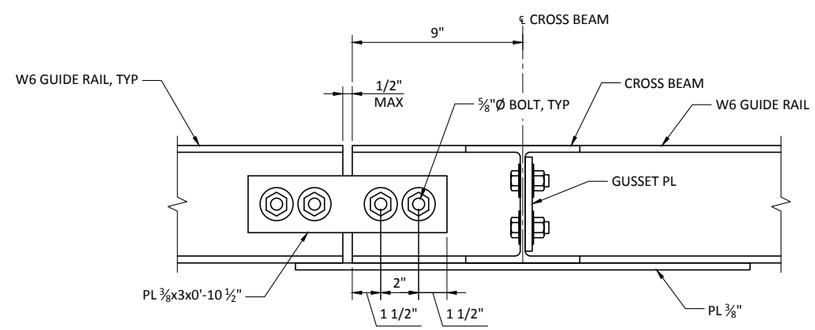

C DETAIL - GUIDE RAIL SPLICE
SCALE: 3"=1'-0"

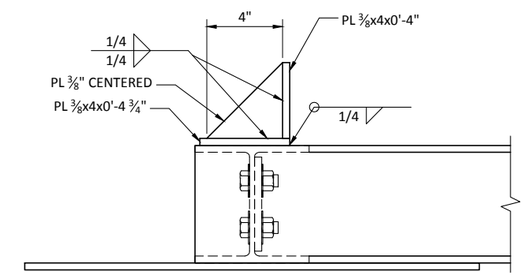

D DETAIL - GUIDE RAIL STOP
SCALE: 3"=1'-0"

BID DOCUMENTS

MARK	REVISION DESCRIPTION	BY	APP.	DATE

BergerABAM
33301 9th Avenue South, Suite 300
Federal Way, Washington 98003-2600
(206) 431-2300 Fax: (206) 431-2250

SCOTT BRANLUND STATE OF WASHINGTON STRUCTURAL ENGINEER PROFESSIONAL ENGINEER

DRAWN BY MDB
DESIGN BY GDN
CHECK BY CSB
PROJ MGR CSB

PORT OF GRAYS HARBOR
28TH STREET BOAT LAUNCH IMPROVEMENTS
CONSTRUCTION PHASE II

GUIDE FRAME PLAN AND DETAILS

DRAWING NO. S-11
PROJECT NO. FAWAT-12-145
DATE: 10/30/17
SHEET NO. 44 OF 48

Last Saved by: Garth.nelson on: Jul 27, 2017 3:05 PM File: Q:\FederalWay\2012\FAWAT-12-145\CADD\Dwgs\Phase_II\P23_S11.dwg

Copyright © BergerABAM. All Rights Reserved.

ELECTRICAL NOTES:

1 GRAYS HARBOR PUD PROVIDING AND CONNECTING NEW STREET LIGHT ON EXISTING UTILITY POLE.

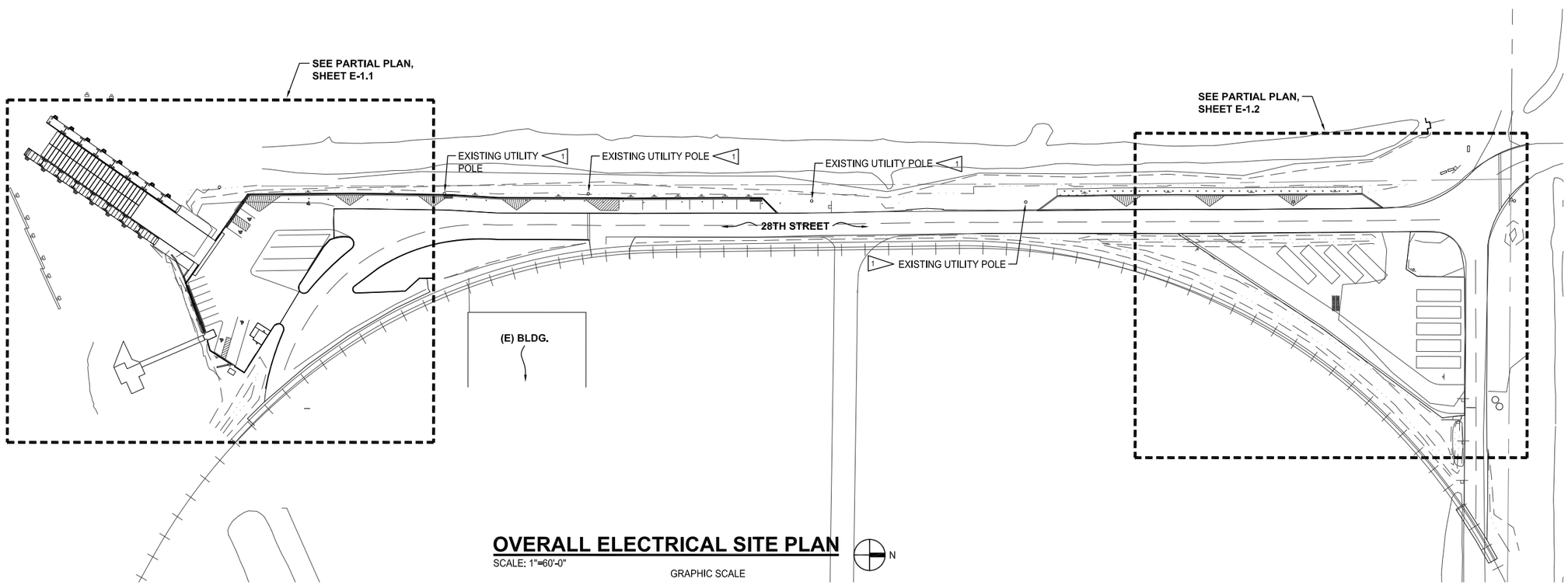

OVERALL ELECTRICAL SITE PLAN

SCALE: 1"=60'-0"

GRAPHIC SCALE

1"=60'-0" 60 0 60 120 scale feet

IF SHEET IS LESS THAN 22" x 34"
IT IS A REDUCED SET

BID DOCUMENTS

MARK	REVISION DESCRIPTION	BY	APP.	DATE

BergerABAM
33301 9th Avenue South, Suite 300
Federal Way, Washington 98003-2600
(206) 431-2300 Fax: (206) 431-2250

CROSS ENGINEERS, INC
6509 6th Avenue
Tacoma, WA 98406
Info@crossengineers.com
Phone: (253) 759-0118
Job Number: 14-114

STEVEN L. HUBBS STATE OF WASHINGTON 0029060 REGISTERED PROFESSIONAL ENGINEER 3/17/17

DRAWN BY JAE
DESIGN BY SJK
CHECK BY SLH
PROJ MGR GLW

PORT OF GRAYS HARBOR

28TH STREET IMPROVEMENTS CONCEPT STUDY

OVERALL ELECTRICAL SITE PLAN

DRAWING NO. **E-1.0**
PROJECT NO. FAWAT-12-145
DATE: 3/17/17
SHEET NO. 45 - OF - 48

Last Saved by: ScottK on: Mar 16, 2017 3:38 PM File: N:\Jobs\2014\14-114\Dwgs\14-114-E10.dwg

Copyright © BergerABAM. All Rights Reserved.

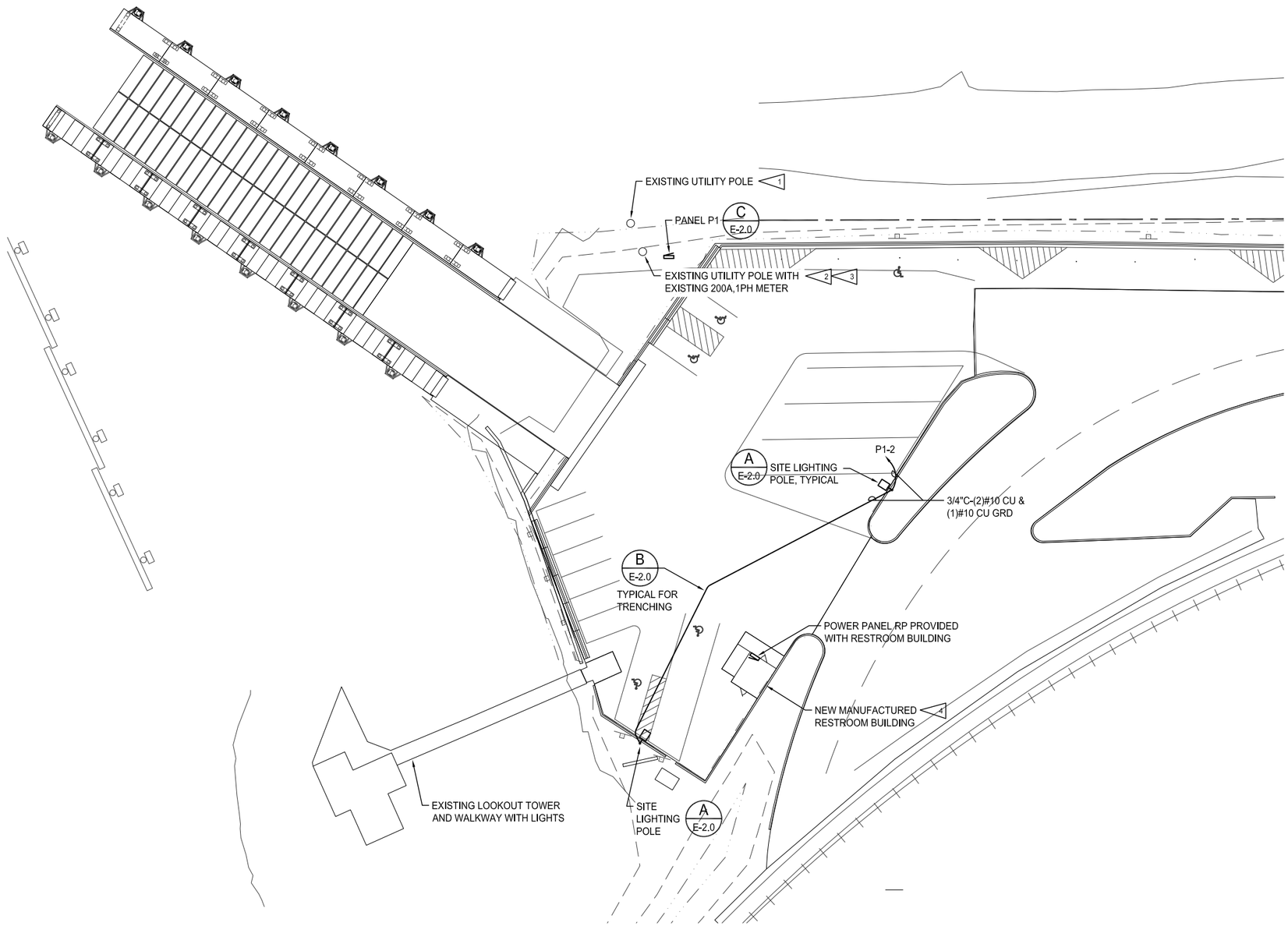

PARTIAL ELECTRICAL SITE PLAN

SCALE: 1"=20'-0"

N

GRAPHIC SCALE

1"=20'-0" 20 0 20 40

scale feet

ELECTRICAL NOTES:

1. GRAYS HARBOR PUD PROVIDING AND CONNECTING NEW STREET LIGHT ON EXISTING UTILITY POLE.
2. CONTRACTOR SHALL REMOVE EXISTING PANEL AND CONNECT NEW PANEL P1 . SEE POWER RISER, SHEET E-2.0.
3. CONTRACTOR SHALL INTERCEPT EXISTING LOOKOUT TOWER LIGHT CIRCUIT AT BASE OF UTILITY POLE AND EXTEND TO NEW POWER PANEL P1. CONNECT EXISTING LIGHTING CIRCUIT TO NEW POWER PANEL P1, CIRCUIT #4. CONTRACTOR SHALL COORDINATE WITH PORT OF GRAYS HARBOR FOR INSTALLATION OF NEW SECURITY CAMERA AND RELATED EQUIPMENT (PORT OF GRAYS HARBOR FURNISHED) ON POLE. CONTRACTOR SHALL PROVIDE 3/4"C(RGS)-(2)#12 CU & (1)#12 CU GRD FROM PANEL P1 AND CONNECT CAMERA.
4. CONTRACTOR SHALL COORDINATE WITH PREMANUFACTURED RESTROOM BUILDING SUPPLIER. PROVIDE CONDUIT AND CONDUCTORS TO CONNECT POWER PANEL PROVIDED WITH BUILDING TO NEW POWER PANEL P1. SEE POWER RISER DIAGRAM, SHEET E-2.0 FOR ADDITIONAL INFORMATION.

IF SHEET IS LESS THAN 22" x 34"
IT IS A REDUCED SET

BID DOCUMENTS

MARK	REVISION DESCRIPTION	BY	APP.	DATE

BergerABAM
33301 9th Avenue South, Suite 300
Federal Way, Washington 98003-2600
(206) 431-2300 Fax: (206) 431-2250

CROSS ENGINEERS, INC
6509 6th Avenue
Tacoma, WA 98406
Info@crossenglneers,com
Phone: (253) 759-0118
Job Number: 14-114

STEVEN L. HUBBS STATE OF WASHINGTON 0029060 REGISTERED PROFESSIONAL ENGINEER
3/17/17

DRAWN BY JAE
DESIGN BY SJK
CHECK BY SLH
PROJ MGR GLW

PORT OF GRAYS HARBOR

28TH STREET IMPROVEMENTS CONCEPT STUDY

PARTIAL ELECTRICAL SITE PLAN

DRAWING NO. **E-1.1**
PROJECT NO. FAWAT-12-145
DATE: 3/17/17
SHEET NO. 46 - OF - 48

Last Saved by: ScottK on: Mar 16, 2017 3:38 PM File: N:\Jobs\2014\14-114\Dwgs\14-114-E11.dwg

Copyright © BergerABAM. All Rights Reserved.

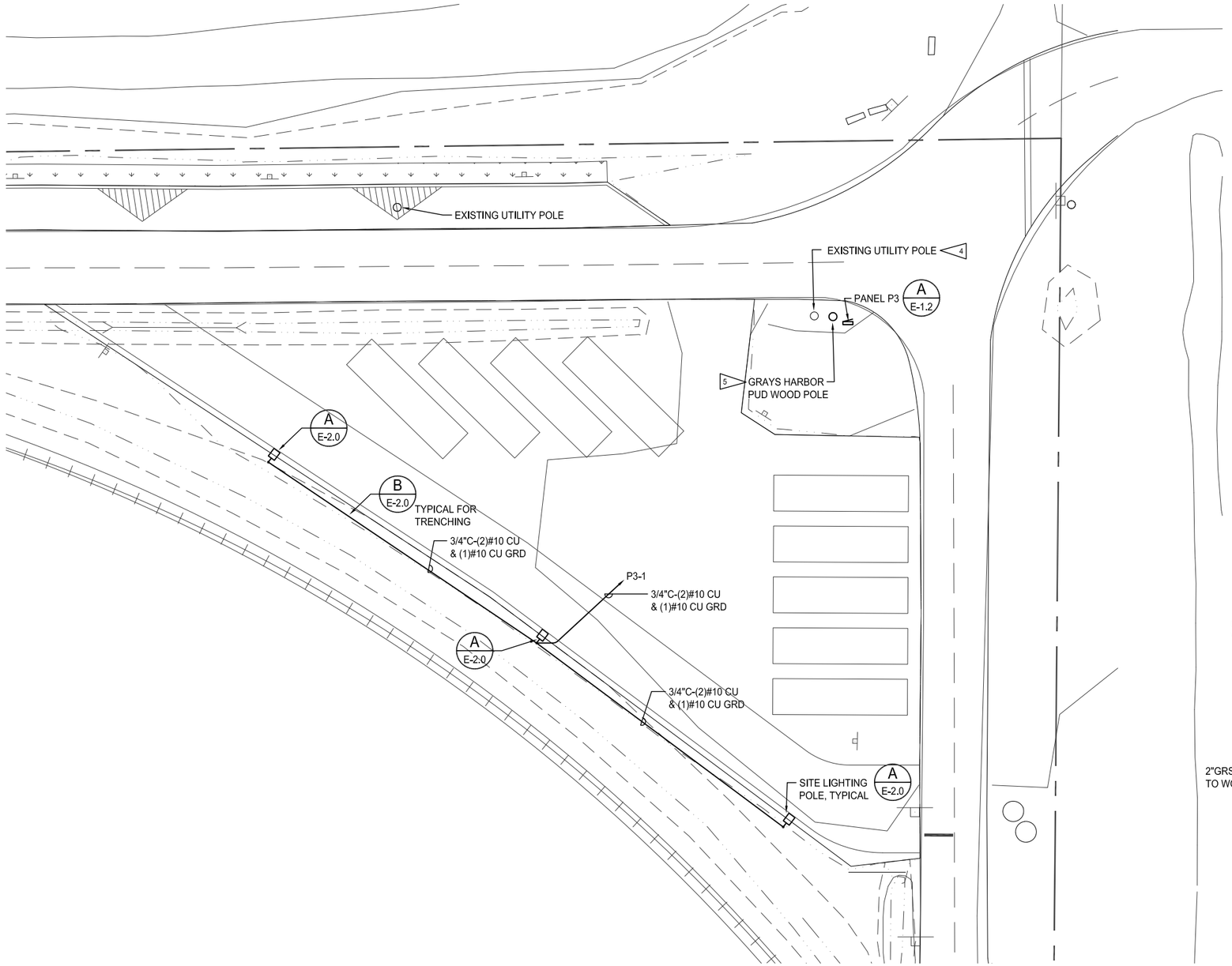

PARTIAL ELECTRICAL SITE PLAN

SCALE: 1"=20'-0"

N

GRAPHIC SCALE

1"=20'-0" 20 0 20 40

scale feet

ELECTRICAL NOTES:

1. PROVIDE 8'-0" SECTION OF 3" RIGID GALVANIZED STEEL CONDUIT WITH THREADED END CAP. PROVIDE 8" ROUND x 3'-0" DEEP, 300 PSI CONCRETE BASE AND EMBED CONDUIT 3'-0" BELOW FINISHED GRADE. TYPICAL OF TWO(2).
2. PROVIDE (3)1-5/8" HOT DIP GALVANIZED STRUT EACH SIDE BETWEEN RIGID STEEL CONDUIT POSTS FOR MOUNTING EQUIPMENT. DRILL CONDUIT AND PROVIDE STAINLESS STEEL MOUNTING HARDWARE FOR STRUT AND EQUIPMENT MOUNTING.
3. PROVIDE (2)10'-0" x 3/4" COPPER CLAD STEEL GROUND RODS SPACED NO LESS THAN 10 FEET APART. PROVIDE #6 BARE CU BETWEEN EACH GROUND ROD AND UP TO EQUIPMENT MOUNTING STRUCTURE AND ELECTRICAL PANEL. INSTALL GROUND WIRE IN 1"PVC SCHEDULE 40 TO 12" BELOW FINISHED GRADE FOR SECURITY.
4. GRAYS HARBOR PUD PROVIDING AND CONNECTING NEW STREET LIGHT ON EXISTING UTILITY POLE.
5. CONTRACTOR SHALL COORDINATE INSTALLATION WITH GRAYS HARBOR PUD OF UTILITY WOOD POLE AND TRANSFORMER TO SERVE PANEL P3.

NEMA 4X
SURFACE MOUNTING
10,000 AIC

PANEL SCHEDULE

NO. **P3** LOCATION: EXTERIOR SERVING: EQUIPMENT

120/240 VOLTS 1PH 3WIRE
100 AMPS WITH 100 MAIN BREAKER

CKT NO.	LOAD DESCRIPTION	KVA	TRIP AMPS		TRIP AMPS	KVA	LOAD DESCRIPTION	CKT NO.
1	PARKING LOT LIGHTS	.60	20				SPACE	2
3	SPARE							4
5								6
7								8
9								10
11	SPARE		20				SPACE	12

REMARKS: SERVICE ENTRANCE RATED.

CONNECTED LOAD:	.6 KVA	3 AMPS
DEMAND LOAD:	.8 KVA	3 AMPS

PROVIDE HANDLE TIES FOR ALL MULTI-CIRCUIT HOMERUNS SHARING A NEUTRAL PER THE NATIONAL ELECTRIC CODE ARTICLE 210.4 MULTIWIRE BRANCH CIRCUITS, PART (B) DISCONNECTING MEANS. DRAWINGS ARE DIAGRAMMATIC. WHERE THE CONTRACTOR MODIFIES THE CIRCUITING, THE CONTRACTOR SHALL PROVIDE AN INDIVIDUAL NEUTRAL PER CIRCUIT, MULTI-POLE CIRCUIT BREAKERS, OR CIRCUIT BREAKER HANDLE TIE TO MEET THE NEC ARTICLE. ALL COSTS ASSOCIATED WITH MODIFICATIONS SHALL BE INCLUDED IN THE CONTRACTOR'S BID.

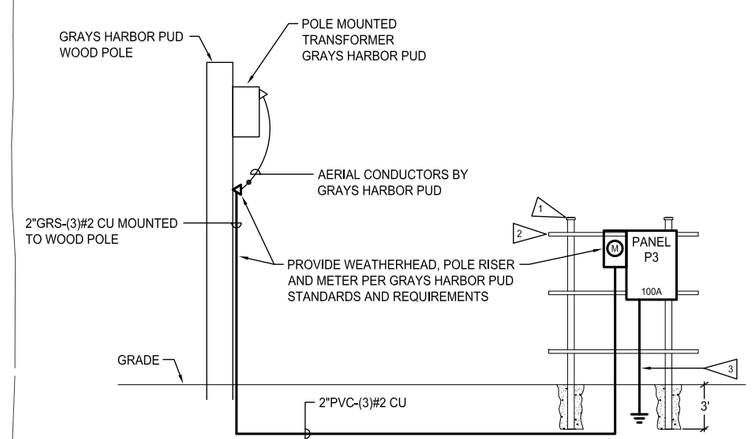

A E-1.2 **PANEL P3 SERVICE - POWER RISER DIAGRAM**
NO SCALE

IF SHEET IS LESS THAN 22" x 34"
IT IS A REDUCED SET

BID DOCUMENTS

MARK	REVISION DESCRIPTION	BY	APP.	DATE

BergerABAM
33301 9th Avenue South, Suite 300
Federal Way, Washington 98003-2600
(206) 431-2300 Fax: (206) 431-2250

CROSS ENGINEERS, INC
6509 6th Avenue
Tacoma, WA 98406
Info@crossengineers.com
Phone: (253) 759-0118
Job Number: 14-114

STEVEN L. HUBBS STATE OF WASHINGTON 0029060 REGISTERED PROFESSIONAL ENGINEER 3/17/17

DRAWN BY JAE
DESIGN BY SJK
CHECK BY SLH
PROJ MGR GLW

PORT OF GRAYS HARBOR
28TH STREET IMPROVEMENTS CONCEPT STUDY
OVERALL ELECTRICAL SITE PLAN

DRAWING NO. **E-1.2**
PROJECT NO. FAWAT-12-145
DATE: 3/17/17
SHEET NO. 47 - OF - 48

Last Saved by: ScottK on: Mar 16, 2017 3:38 PM File: N:\Jobs\2014\14-114\Dwgs\14-114-E12.dwg

Copyright © BergerABAM. All Rights Reserved.

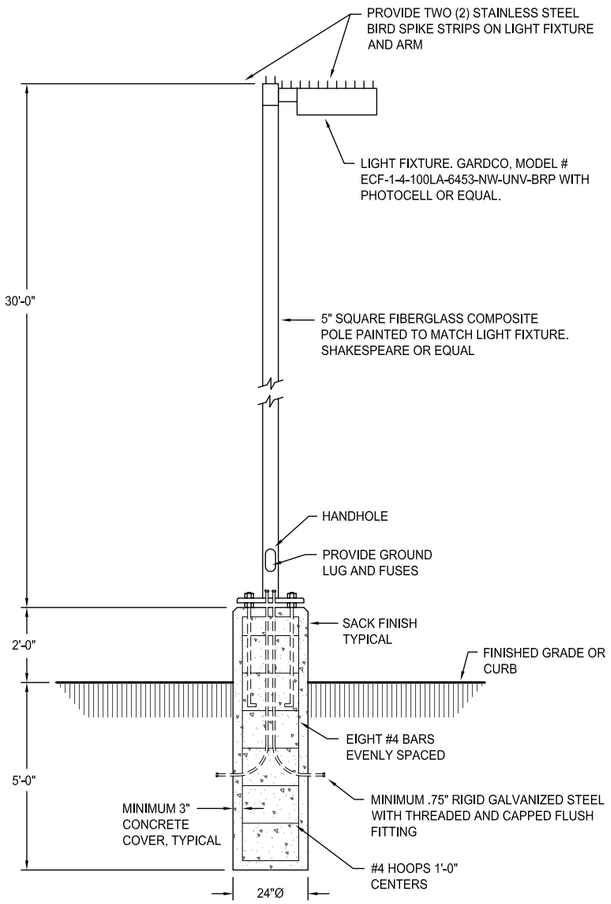

A E-2.0 **LIGHT POLE AND CONCRETE BASE**
NOT TO SCALE

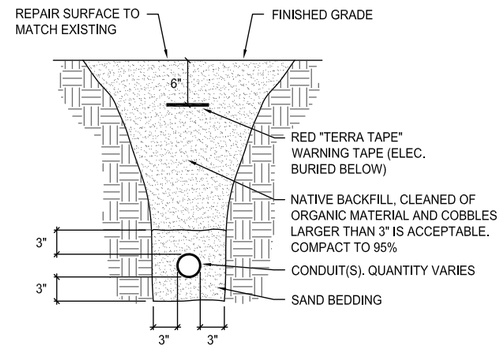

B E-2.0 **CONDUIT TRENCHING**
NOT TO SCALE

ELECTRICAL NOTES:

1. PROVIDE 8'-0" SECTION OF 3" RIGID GALVANIZED STEEL CONDUIT WITH THREADED END CAP. PROVIDE 8" ROUND x 3'-0" DEEP, 300 PSI CONCRETE BASE AND EMBED CONDUIT 3'-0" BELOW FINISHED GRADE. TYPICAL OF TWO(2).
2. PROVIDE (3)1-5/8" HOT DIP GALVANIZED STRUT EACH SIDE BETWEEN RIGID STEEL CONDUIT POSTS FOR MOUNTING EQUIPMENT. DRILL CONDUIT AND PROVIDE STAINLESS STEEL MOUNTING HARDWARE FOR STRUT AND EQUIPMENT MOUNTING.
3. PROVIDE (2)10'-0" x 3/4" COPPER CLAD STEEL GROUND RODS SPACED NO LESS THAN 10 FEET APART. PROVIDE #6 BARE CU BETWEEN EACH GROUND ROD AND UP TO EQUIPMENT MOUNTING STRUCTURE AND ELECTRICAL PANEL. INSTALL GROUND WIRE IN 1"PVC SCHEDULE 40 TO 12" BELOW FINISHED GRADE FOR SECURITY.
4. CONTRACTOR SHALL INTERCEPT EXISTING CONDUIT AND CONDUCTORS AT BASE OF EXISTING UTILITY POLE - PROVIDE WSDOT J11A HANDHOLE AT EXISTING WOOD POLE AND PROVIDE 3/4"PVC CONDUIT WITH (2)#10 CU & (1)#10 CU GRD TO PANEL P1. PROVIDE WATERTIGHT SPLICES OF EXISTING AND NEW CONDUCTORS IN JUNCTION BOX.

NEMA 4X
SURFACE MOUNTING
22,000 AIC

PANEL SCHEDULE

NO. **P1** — LOCATION: EXTERIOR — SERVING: EQUIPMENT — 120/240 VOLTS 1PH 3WIRE — 200 AMPS WITH 200 MAIN BREAKER

CKT NO.	LOAD DESCRIPTION	KVA	TRIP AMPS		TRIP AMPS	KVA	LOAD DESCRIPTION	CKT NO.
1	PANEL RP	10.00	100		20	.50	PARKING LOT LIGHTS	2
3			2			1.50	(E) LOOKOUT TOWER LIGHTS	4
5	SPARE		20			.10	SECURITY CAMERA	6
7							SPARE	8
9							SPARE	10
11	SPARE		20		20		SPARE	12
13	SPACE						SPACE	14
15								16
17								18
19	SPACE						SPACE	20

REMARKS: SERVICE ENTRANCE RATED.

CONNECTED LOAD: 12.1 KVA 50 AMPS
DEMAND LOAD: 12.6 KVA 53 AMPS

PROVIDE HANDLE TIES FOR ALL MULTI-CIRCUIT HOMERUNS SHARING A NEUTRAL PER THE NATIONAL ELECTRIC CODE ARTICLE 210.4 MULTIWIRE BRANCH CIRCUITS, PART (B) DISCONNECTING MEANS. DRAWINGS ARE DIAGRAMMATIC. WHERE THE CONTRACTOR MODIFIES THE CIRCUITING, THE CONTRACTOR SHALL PROVIDE AN INDIVIDUAL NEUTRAL PER CIRCUIT, MULTI-POLE CIRCUIT BREAKERS, OR CIRCUIT BREAKER HANDLE TIE TO MEET THE NEC ARTICLE. ALL COSTS ASSOCIATED WITH MODIFICATIONS SHALL BE INCLUDED IN THE CONTRACTOR'S BID.

LEGEND:

EXISTING
NEW

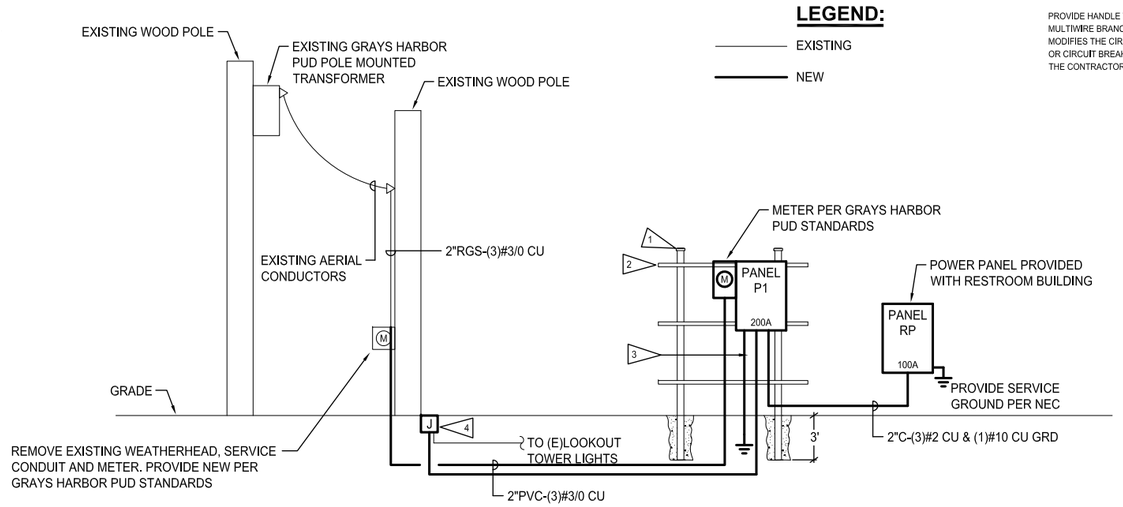

C E-2.0 **PANEL P1 SERVICE - POWER RISER DIAGRAM**
NO SCALE

IF SHEET IS LESS THAN 22" x 34"
IT IS A REDUCED SET

BID DOCUMENTS

MARK	REVISION DESCRIPTION	BY	APP.	DATE

BergerABAM
33301 9th Avenue South, Suite 300
Federal Way, Washington 98003-2600
(206) 431-2300 Fax: (206) 431-2250

CROSS ENGINEERS, INC
6509 6th Avenue
Tacoma, WA 98406
Info@crossengineers.com
Phone: (253) 759-0118
Job Number: 14-114

STEVEN L. HUBBS — STATE OF WASHINGTON — 0029060 — REGISTERED PROFESSIONAL ENGINEER — 3/17/17

DRAWN BY JAE
DESIGN BY SJK
CHECK BY SLH
PROJ MGR GLW

PORT OF GRAYS HARBOR
28TH STREET IMPROVEMENTS CONCEPT STUDY
ELECTRICAL DETAILS, PANEL SCHEDULES AND POWER RISER DIAGRAM

DRAWING NO. **E-2.0**
PROJECT NO. FAWAT-12-145
DATE: 3/17/17
SHEET NO. 48 - OF - 48

Last Saved by: ScottK on: Mar 16, 2017 3:39 PM File: N:\Jobs\2014\14-114\Dwgs\14-114-E20.dwg