PORT OF SKAMANIA COUNTY
WATERFRONT TRAIL IMPROVEMENTS

MARCH 2019

FINAL SUBMITTAL

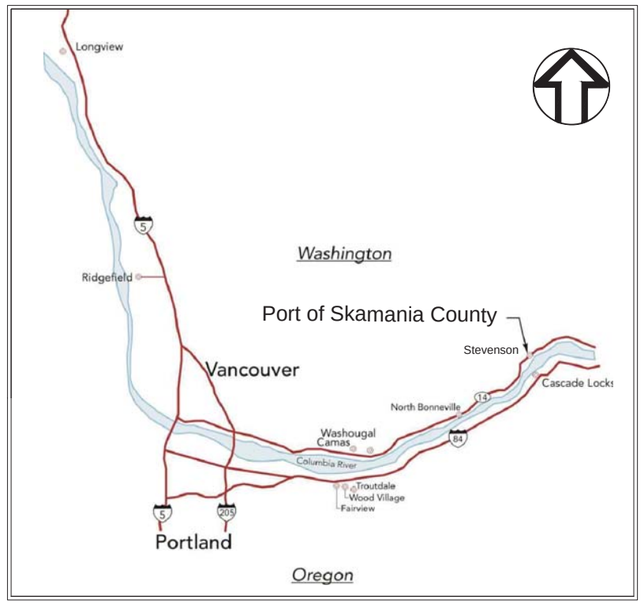

LOCATION MAP

NOT TO SCALE

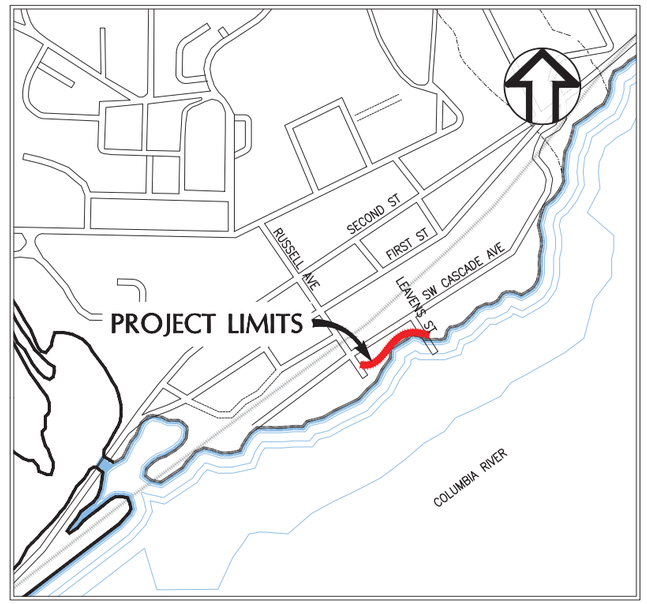

PROJECT SITE MAP

NOT TO SCALE

Owner/Client: Port of Skamania County
212 SW Cascade Ave
Stevenson, Washington 98648
Contact: Pat Albaugh, Executive Director
(509) 427-5484
pat@portofskamania.org

Civil Engineer: Wallis Engineering
215 W. 4th St., Suite 200
Vancouver, Washington 98660
Contact: Jane Vail
(360) 695-7041
jane.vail@walliseng.net

SHEET INDEX

C1	COVER
C2	GENERAL NOTES & LEGEND
C3	EXISTING CONDITIONS, DEMOLITION, & EROSION CONTROL
C4	EROSION CONTROL DETAILS
C5	STAGING & TRAFFIC CONTROL PLAN
C6	TYPICAL SECTIONS
C7	IMPROVEMENT PLAN
C8	ADDED ALTERNATIVE IMPROVEMENT PLAN
C9	REST AREA & OVERLOOK PLAN
C10	DETAILS
L1	PLANTING PLAN
L2	PLANTING DETAILS

FEDERAL AID NO. XXXX

FEDERAL CONTRACT NO. XXXX

APPROVED FOR CONSTRUCTION BY: _____ _____

Pat Albaugh, Executive Director — Date

PRELIMINARY

JANE W. VAIL — STATE OF WASHINGTON — 52600 — REGISTERED PROFESSIONAL ENGINEER

NO.	REVISION	BY	DATE

ONE INCH 0 — 1"
ONE INCH AT FULL SCALE. IF NOT ONE INCH ADJUST SCALE ACCORDINGLY

DESIGNED BY: JV
DRAWN BY: CK
REV: DB

COVER

wallis engineering — 215 W 4th Street, Suite 200, Vancouver, WA 98660, 360.695.7041

PROJECT NO: 1464A
DATE: 3/2019

PORT OF SKAMANIA COUNTY WATERFRONT TRAIL IMPROVEMENTS

DRAWING NO:

C1

P:\14\1464A Waterfront Trail\500 DWG\501 Plan Sheets\COVER.dwg, 3/14/2019 9:56:26 AM, Chad Kays

GENERAL NOTES

1. ALL MATERIALS AND WORKMANSHIP SHALL FOLLOW THE 2018 EDITION OF THE WSDOT "STANDARD SPECIFICATIONS FOR ROAD, BRIDGE, AND MUNICIPAL CONSTRUCTION." WHEREVER THE WSDOT STANDARD SPECIFICATIONS REFER TO THE OWNER AS THE "STATE" OR "SECRETARY" OR WHEN REFERENCE IS MADE TO THE DEPARTMENT OF TRANSPORTATION IT SHALL BE UNDERSTOOD THAT THE STANDARD SPECIFICATIONS SHOULD READ THE "PORT".
2. ALL MATERIALS AND WORK ARE SUBJECT TO INSPECTION AND APPROVAL BY THE PORT OF SKAMANIA COUNTY.
3. THE CONTRACTOR SHALL ADOPT THE GENERAL TRAFFIC CONTROL PLANS INCLUDED HEREIN OR SUBMIT NEW GENERAL TRAFFIC CONTROL AND STAGING PLANS TO THE PORT OF SKAMANIA COUNTY FOR APPROVAL PRIOR TO BEGINNING CONSTRUCTION. THE PLANS SHALL BE REVIEWED BY THE PORT OF SKAMANIA COUNTY AND APPROVAL SHALL BE OBTAINED TWO (2) WORKING DAYS PRIOR TO BEGINNING CONSTRUCTION.
4. THE LOCATION OF EXISTING UTILITIES SHOWN ON THE PLANS ARE COMPILED FROM AVAILABLE RECORDS. THIS DOES NOT GUARANTEE THE ACCURACY OR THE COMPLETENESS OF SUCH RECORDS. THE CONTRACTOR SHALL BE RESPONSIBLE FOR DETERMINING THE LOCATION OF ALL EXISTING UNDERGROUND UTILITIES AND NOTIFY THE ENGINEER OF ANY POTENTIAL CONFLICTS WITH PROPOSED IMPROVEMENTS. THE CONTRACTOR SHALL DIG TEST HOLES OVER ALL EXISTING UTILITIES PRIOR TO CONSTRUCTION TO DETERMINE THEIR EXACT LOCATION. CALL 1-800-424-5555 FOR UTILITIES LOCATE A MINIMUM OF 48 HOURS PRIOR TO THE START OF CONSTRUCTION.
5. THE CONTRACTOR SHALL OBTAIN A RIGHT-OF-WAY PERMIT FOR ALL WORK WITHIN CITY OF STEVENSON RIGHT-OF-WAY. NO EXCAVATED MATERIAL IS TO BE PLACED ON CITY STREETS WITHOUT PRIOR WRITTEN APPROVAL FROM THE CITY OF STEVENSON.
6. THE INSPECTOR SHALL, AT ALL TIMES, HAVE ACCESS TO THE WORK FOR THE PURPOSE OF INSPECTION AND TESTING. THE CONTRACTOR SHALL PREPARE FACILITIES FOR SUCH ACCESS AND SUCH INSPECTION AND TESTING.
7. ALL DISTURBED AREAS SHALL BE RESTORED TO ORIGINAL CONDITION WHERE APPLICABLE.
8. CONTRACTOR TO LEAVE ALL AREAS OF PROJECT FREE OF DEBRIS AND UNUSED CONSTRUCTION MATERIAL.
9. ACCESS TO THE STEVENSON LANDING CRUISE SHIP PIER SHALL BE MAINTAINED AT ALL TIMES. COORDINATE WITH THE PORT FOR ANY PROPOSED INTERRUPTION TO ACCESS.

STREET NOTES

1. THE CONTRACTOR SHALL VERIFY PROPOSED PATH ELEVATIONS PRIOR TO CONSTRUCTION TO ENSURE COMPLIANCE WITH THE CONSTRUCTION DRAWINGS AND REPORT ANY DISCREPANCIES IMMEDIATELY TO THE ENGINEER.
2. CONTRACTOR SHALL ALLOW ENGINEER 24 HOURS TO COMPLETE INSPECTION OF ALL PAVING LINES AND GRADES, CURB STRINGLINES, AND SIDEWALK FORMS PRIOR TO SURFACING PLACEMENT.

SURVEYOR'S NOTES

1. TOPOGRAPHIC SURVEY PROVIDED BY KLEIN & ASSOCIATES.
2. TOPOGRAPHIC DETAIL IS GIVEN WITH A 2' CONTOUR INTERVAL.
3. HORIZONTAL DATUM = NAD83 (2011), VERTICAL DATUM = NAVD88 (GEOID 12B), UNITS = US SURVEY FEET

SURVEY CONTROL POINT TABLE

POINT LIST				
POINT NUMBER	NORTHING	EASTING	ELEVATION	DESCRIPTION
*△100	134302.896	1288240.179	95.142	5/8" REBAR W/ CAP
△101	133965.874	1287646.958	84.167	5/8" REBAR RPC

*NOT SHOWN ON PLANS

LEGEND

EXISTING

- EXISTING RIGHT OF WAY
- EXISTING PROPERTY LINE
- 95 — EXISTING CONTOUR
- EXISTING EDGE OF PAVEMENT
- EXISTING EDGE OF CONCRETE
- EXISTING CONCRETE SIDEWALK
- SD — EXISTING STORM, SIZE NOTED IF KNOWN
- SS — EXISTING SANITARY, SIZE NOTED IF KNOWN
- W — EXISTING WATER, SIZE NOTED IF KNOWN
- G — EXISTING GAS
- OHT — EXISTING OVERHEAD TELEPHONE
- FO — EXISTING FIBER OPTIC
- SS — EXISTING SANITARY MANHOLE
- SD — EXISTING STORM MANHOLE
- EXISTING CATCH BASIN
- EXISTING LUMINAIRE
- EXISTING ELECTRICAL BOX
- EXISTING TREE
- EXISTING BUILDING
- HCA — EXISTING HABITAT CONSERVATION AREA BOUNDARY
- OHWM — ORDINARY HIGH WATER MARK
- △ — SURVEY CONTROL POINT

PROPOSED

- PROPOSED PATH CENTERLINE
- PROPOSED ASPHALT CONCRETE PATH, REST AREA, OR OVERLOOK
- PROPOSED CEMENT CONCRETE SIDEWALK
- PROPOSED GRAVEL SHOULDER
- PROPOSED BOLLARD
- PROPOSED JUNCTION BOX
- UGC — PROPOSED UNDERGROUND CONDUIT
- C/F — PROPOSED CUT/FILL LIMITS
- 95 — PROPOSED CONTOUR

PRELIMINARY
JANE W. VALLEY
STATE OF WASHINGTON
42600
REGISTERED PROFESSIONAL ENGINEER

NO.	REVISION	BY	DATE

DESIGNED BY: JV
DRAWN BY: CK
REQ: DB

ONE INCH
0 1"
ONE INCH AT FULL SCALE. IF NOT ONE INCH ADJUST SCALE ACCORDINGLY

GENERAL NOTES & LEGEND

wallis engineering
210 W 4th Street, Suite 200
Vancouver, WA 98660
360-693-7001

PROJECT NO: 1464A
DATE: 3/2019

PORT OF SKAMANIA COUNTY WATERFRONT TRAIL IMPROVEMENTS

PORT of SKAMANIA COUNTY

DRAWING NO:
C2

P:\14\1464A Waterfront Trail\500 DWG\501 Plan Sheets\2 GENERAL NOTES & LEGEND.dwg, 3/14/2019 9:56:31 AM, Chad Keys

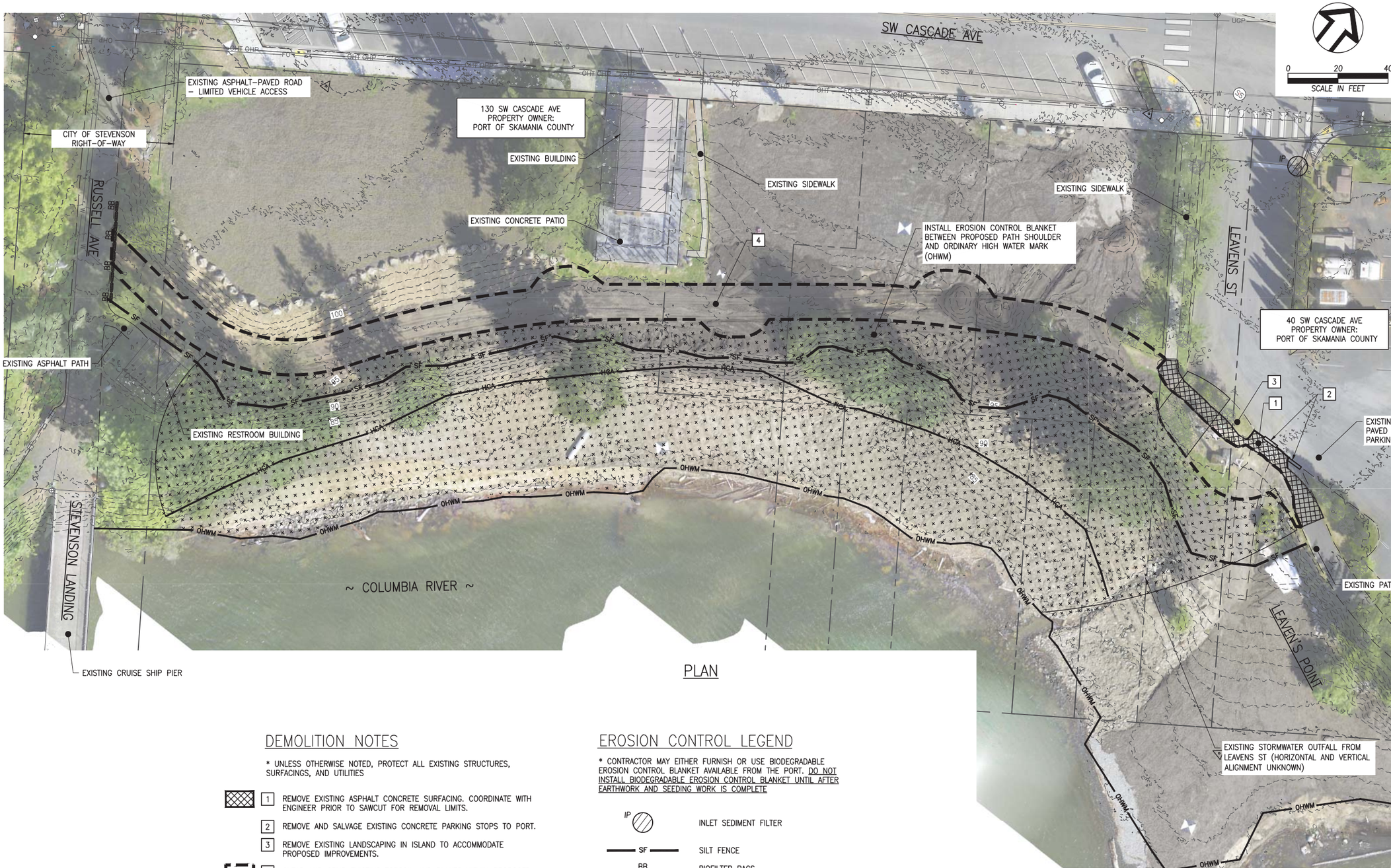

PLAN

DEMOLITION NOTES

* UNLESS OTHERWISE NOTED, PROTECT ALL EXISTING STRUCTURES, SURFACINGS, AND UTILITIES

1. REMOVE EXISTING ASPHALT CONCRETE SURFACING. COORDINATE WITH ENGINEER PRIOR TO SAWCUT FOR REMOVAL LIMITS.
2. REMOVE AND SALVAGE EXISTING CONCRETE PARKING STOPS TO PORT.
3. REMOVE EXISTING LANDSCAPING IN ISLAND TO ACCOMMODATE PROPOSED IMPROVEMENTS.
4. CLEAR AND GRUB EXISTING TOPSOIL AND PLANTS WITHIN PROPOSED PATH FOOTPRINT.

EROSION CONTROL LEGEND

* CONTRACTOR MAY EITHER FURNISH OR USE BIODEGRADABLE EROSION CONTROL BLANKET AVAILABLE FROM THE PORT. DO NOT INSTALL BIODEGRADABLE EROSION CONTROL BLANKET UNTIL AFTER EARTHWORK AND SEEDING WORK IS COMPLETE

- IP — INLET SEDIMENT FILTER
- SF — SILT FENCE
- BB — BIOFILTER BAGS
- BIODEGRADABLE EROSION CONTROL BLANKET*
- CONSTRUCTION ENTRANCE

PRELIMINARY

JANE W. VALLEY, STATE OF WASHINGTON, 52800, REGISTERED PROFESSIONAL ENGINEER

NO.	REVISION	BY	DATE

ONE INCH 0 1"
ONE INCH AT FULL SCALE. IF NOT ONE INCH ADJUST SCALE ACCORDINGLY

DESIGNED BY: JV
DRAWN BY: CK
REV: DB

EXISTING CONDITIONS, DEMOLITION, & EROSION CONTROL

wallis engineering
215 W 4th Street, Suite 200
Vancouver, WA 98660
360.695.7041

PROJECT NO: 1464A
DATE: 3/2019

PORT OF SKAMANIA COUNTY WATERFRONT TRAIL IMPROVEMENTS

PORT of SKAMANIA COUNTY

DRAWING NO: C3

P:\14\1464A Waterfront Trail\500 DWG\501 Plan Sheets\3 EXISTING CONDITIONS, DEMOLITION, & EROSION CONTROL.dwg, 3/14/2019 9:56:50 AM, Chad Kays

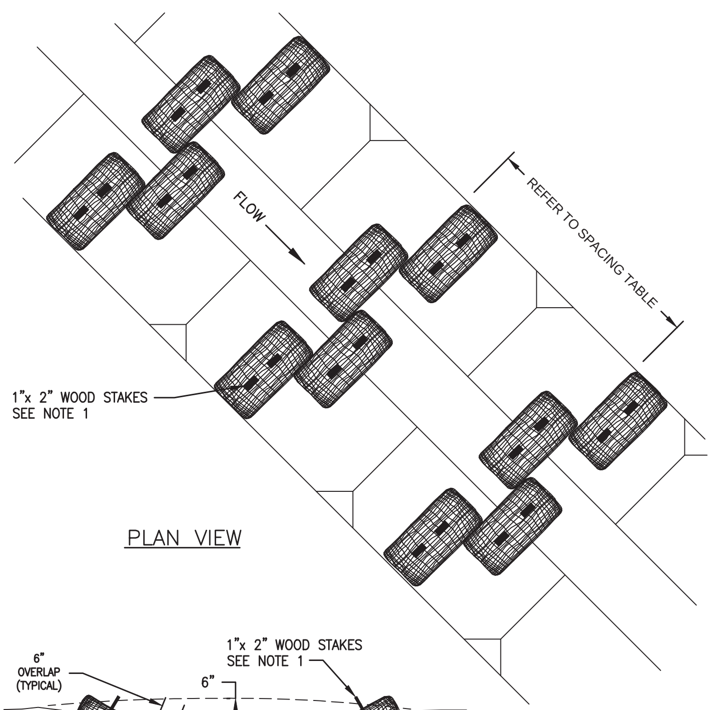

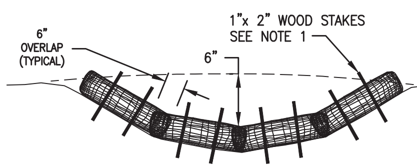

NOTES:

1. STAKING OF BAGS REQUIRED USING (2) 1"X2" WOOD STAKES OR APPROVED EQUAL PER BAG.
2. SURFACE MUST BE SMOOTH BEFORE APPLICATION.
3. SEE CHECK DAM NOTES.

BIO-FILTER BAGS CHECK DAM DETAIL

NTS

SILT FENCE MAINTENANCE:

1. SILT FENCES AND FILTER BARRIERS SHALL BE INSPECTED IMMEDIATELY AFTER EACH RAINFALL AND AT LEAST DAILY DURING PROLONGED RAINFALL. ANY REQUIRED REPAIRS SHALL BE MADE IMMEDIATELY.
2. SHOULD THE FABRIC ON A SILT FENCE OF FILTER BARRIER DECOMPOSE OR BECOME INEFFECTIVE PRIOR TO THE END OF THE EXPECTED USABLE LIFE AND THE BARRIER STILL BE NECESSARY, THE FABRIC SHALL BE REPLACED PROMPTLY.
3. SEDIMENT DEPOSITS SHOULD BE REMOVED AFTER EACH STORM EVENT. THEY MUST BE REMOVED WHEN DEPOSITS REACH APPROXIMATELY ONE-HALF THE HEIGHT OF THE BARRIER.
4. ANY SEDIMENT DEPOSITS REMAINING IN PLACE AFTER THE SILT FENCE OR FILTER BARRIER IS NO LONGER REQUIRED SHALL BE DRESSED TO CONFORM WITH THE EXISTING GRADE, PREPARED AND SEEDED.

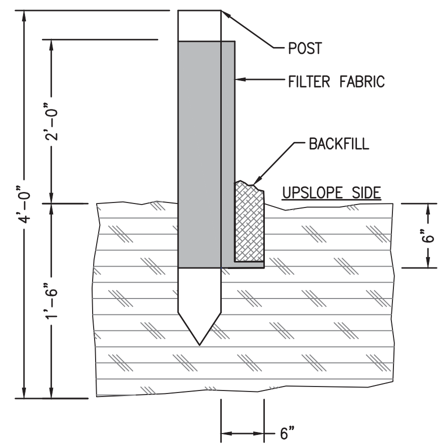

SILT FENCE INSTALLATION

NTS

SILT FENCE GENERAL NOTES:

1. THIS SEDIMENT BARRIER UTILIZES HIGH STRENGTH SYNTHETIC FILTER FABRICS. IT IS DESIGNED FOR SITUATIONS IN WHICH ONLY SHEET OR OVERLAND FLOWS ARE EXPECTED.
2. THE HEIGHT OF A SILT FENCE SHALL NOT EXCEED 36 INCHES (HIGHER FENCES MAY IMPOUND VOLUMES OF WATER SUFFICIENT TO CAUSE FAILURE OF THE STRUCTURE).
3. THE FILTER FABRIC SHALL BE PURCHASED IN A CONTINUOUS ROLL CUT TO THE LENGTH OF THE BARRIER TO AVOID THE USE OF JOINTS. WHEN JOINTS ARE NECESSARY, FILTER CLOTH SHALL BE SPLICED TOGETHER ONLY AT A SUPPORT POST, AND SECURELY SEALED. JOINT SEAL SHALL BE APPROVED BY THE CITY.
4. POSTS SHALL BE SPACED A MAXIMUM OF 6 FEET APART AT THE BARRIER LOCATION AND DRIVEN SECURELY INTO THE GROUND. POSTS SHALL BE DRIVEN 1'6" INTO THE GROUND.
5. A TRENCH SHALL BE EXCAVATED 8" WIDE AND 18 INCHES DEEP ALONG THE LINE OF POSTS AND UPSLOPE FROM THE BARRIER. THE TRENCH SHALL BE BACKFILLED WITH NATIVE SOIL.
6. SILT FENCES SHALL BE REMOVED WHEN THEY HAVE SERVED THEIR USEFUL PURPOSE, BUT NOT BEFORE THE UPSLOPE AREA HAS BEEN PERMANENTLY STABILIZED. CITY APPROVAL SHALL BE OBTAINED PRIOR TO REMOVAL.
7. HIGH STRENGTH FILTER FABRIC SHALL MEET THE REQUIREMENTS OF WSDOT STANDARD SPECIFICATION 9-33, TABLE 6 FOR UNSUPPORTED FABRIC (NO WIRE MESH).

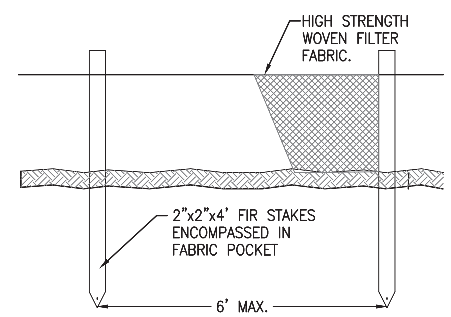

SILT FENCE DETAIL

NTS

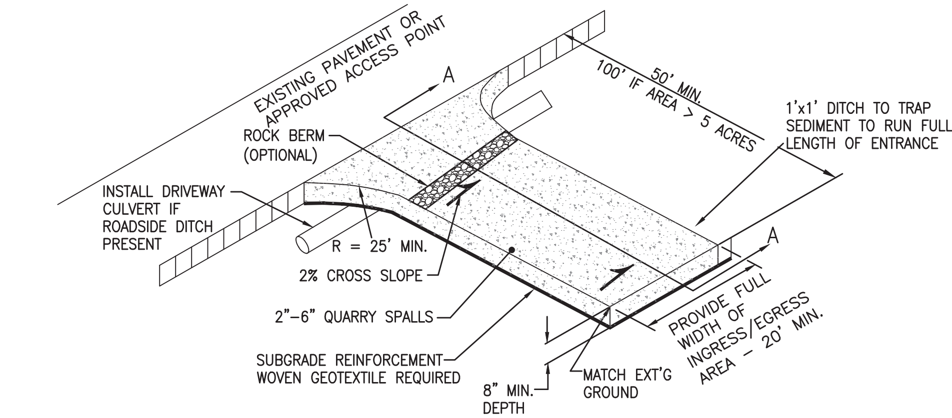

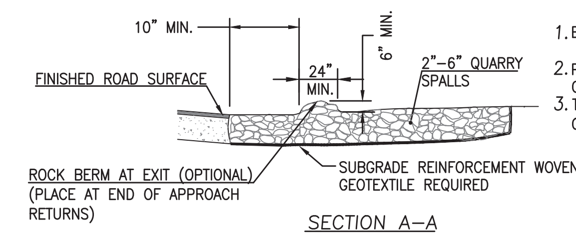

SECTION A-A

1. EXCAVATE MINIMUM OF 12" OF EXISTING SOILS.
2. PLACE MINIMUM OF 12" OF 2"-6" QUARRY SPALLS CONSTRUCT ROCK BERM ALONG TRANSITION POINT
3. TO FINISH ROAD SURFACES, DIVERT RUNOFF TO ONSITE AREA (OPTIONAL).

NOTES:

1. INSTALL WOVEN GEOTEXTILE FABRIC TO PREVENT SUB-SOIL PUMPING.
2. VEHICLE WASHDOWN AREA, IF REQUIRED, IS TO BE INSTALLED AND USED TO REMOVE SEDIMENT FROM VEHICLES THAT ARE ABOUT TO ENTER AN ESTABLISHED ROAD.
3. WASHDOWN AREA TO BE MADE UP OF CLEAN 2"- 6" QUARRY SPALLS, 1" DEEP (MIN) OVER WOVEN GEOTEXTILE FABRIC. WASHDOWN AREA TO BE FULL WIDTH OF ENTRANCE AND 50' (MIN.), AND 100' IF EXPOSED SOIL IS OVER 5 ACRES.
4. THE RESPONSIBLE EROSION CONTROL INDIVIDUAL IS TO ENSURE THAT ALL VEHICLES USE THIS ENTRANCE AND ARE TO BE INSPECTED AND CLEANED OF SOILS BEFORE LEAVING PROJECT, AND THAT THE ENTRANCE IS TO BE KEPT CLEAN AT ALL TIMES.

STANDARD CONSTRUCTION ENTRANCE

NTS

EROSION CONTROL NOTES

1. DO NOT DISTURB MORE AREA THAN NEEDED FOR CONSTRUCTION REQUIREMENTS.
2. ALL EROSION, POLLUTION, AND SEDIMENT CONTROL MEASURES ARE TO BE PLACED PRIOR TO ANY DISTURBANCE CAUSED BY CLEARING OR GRADING AND SHALL CONFORM TO THE REQUIREMENTS OF THE STORMWATER MANAGEMENT MANUAL OF WESTERN WASHINGTON, VOLUME II – CONSTRUCTION STORMWATER POLLUTION PREVENTION, THE EROSION CONTROL PLAN, AND THE STANDARD DETAILS CONTAINED WITHIN THIS SET OF PLANS. NEWLY CONSTRUCTED OR MODIFIED INLETS AND CATCH BASINS ARE TO BE PROTECTED IMMEDIATELY UPON INSTALLATION. TEMPORARY SEEDING AND MULCHING OF EXPOSED SLOPES SHALL BE COMPLETED WITHIN ONE WEEK AFTER ROUGH GRADING. ALL EXPOSED AND UNWORKED SOILS SHALL BE STABILIZED BY THE APPROPRIATE BMP.
3. IN THE EVENT OF ANY EROSION CONTROLS MEASURE FAILURE, IMMEDIATE ACTION SHALL BE TAKEN TO REPAIR, REPLACE, OR CONSTRUCT ADDITIONAL MEASURES AS REQUIRED TO ENSURE ADEQUATE EROSION CONTROL PROTECTION.
4. ALL EROSION AND POLLUTION CONTROL MEASURES SHALL BE INSPECTED AFTER EACH RAINFALL EVENT THAT PRODUCES RUNOFF AND AT LEAST ONE TIME PER MONTH, TO ASSURE ADEQUATE PERFORMANCE. SEE THE STANDARD EROSION CONTROL DETAILS FOR ADDITIONAL MAINTENANCE REQUIREMENTS. A MAINTENANCE LOG SHALL BE KEPT AND SHALL BE MADE AVAILABLE TO THE PORT OF SKAMANIA. SHOULD SPECIFIED EROSION AND POLLUTION CONTROL BMP'S FAIL OR PROVE TO BE INADEQUATE, THE CITY MAY REQUIRE ADDITIONAL BMP'S TO BE INSTALLED, OR INSTALL THEM AND BACK CHARGE THE CONTRACTOR FOR TIME AND MATERIALS.
5. MAINTAIN AND REMOVE ALL EROSION CONTROLS AS SPECIFIED ON THE STANDARD EROSION CONTROL DETAIL SHEET AND PLAN. THE CONTRACTOR SHALL REMOVE ALL ACCUMULATED SEDIMENT PRIOR TO ACCEPTANCE. EROSION CONTROLS SHALL BE REMOVED WITHIN 30 DAYS FOLLOWING FINAL STABILIZATION.
6. WHERE POSSIBLE MAINTAIN NATURAL VEGETATION FOR EROSION AND SILTATION CONTROL.
7. PREVENT SEDIMENT OR SEDIMENT-CONTAINING RUNOFF FROM ENTERING THE COLUMBIA RIVER OR WITHIN 10 FEET OF THE ORDINARY HIGH WATER MARK.
8. AS CONSTRUCTION PROGRESSES AND SEASONAL CONDITIONS DICTATE, MORE SILTATION CONTROL FACILITIES MAY BE REQUIRED TO ENSURE COMPLETE SILTATION CONTROL. THEREFORE DURING THE COURSE OF CONSTRUCTION IT SHALL BE THE OBLIGATION AND RESPONSIBILITY OF THE CONTRACTOR TO ADDRESS ANY NEW CONDITIONS THAT MAY BE CREATED BY CONSTRUCTION ACTIVITIES AND TO PROVIDE ADDITIONAL FACILITIES OVER AND ABOVE THE MINIMUM REQUIREMENTS AS MAY BE NEEDED TO ACHIEVE THE PERFORMANCE STANDARDS REQUIRED BY THE STORMWATER MANAGEMENT MANUAL AND THE STANDARD SPECIFICATIONS.
9. PRIOR TO ANY SITE EXCAVATION, ALL CATCH BASINS IN THE VICINITY OF THE SITE SHALL BE PROTECTED FROM SILT INTRUSION BY COVERING THE OPEN AREA OF THE OUTLET TRAP WITH FILTER FABRIC SECURELY FASTENED TO TRAP. CLEAN THE FILTER FABRIC AS NECESSARY TO MAINTAIN DRAINAGE. REMOVE FILTER FABRIC AND CLEAN THE CATCH BASINS FOLLOWING COMPLETION OF SITEWORK.

10\. PROTECTION OF SURFACES:

   A. INSTALL TRIANGULAR SILT DAMS OR STRAW WATTLES AT LOCAL DRAINAGEWAYS AS SHOWN TO PREVENT SILT INTRUSION UPON ADJACENT DRAINAGE COURSES. REMOVE FOLLOWING ESTABLISHMENT OF GRASS COVER AND SEED BARE AREAS.

   B. AT ALL ACCESS POINTS OR AT CONTRACTOR STAGING AREAS ONTO THE SITE THAT ARE UTILIZED BY CONSTRUCTION EQUIPMENT AND TRUCKS, PROVIDE A 12 INCH DEEP PAD OF CRUSHED ROCK FOR A DISTANCE OF 50 FEET INTO THE SITE, A MINIMUM OF 20 FEET WIDE. ALL TRUCKS LEAVING THE SITE SHALL EGRESS ACROSS THE PAD. ACCUMULATED SOIL FROM THE PAD SHALL BE PERIODICALLY REMOVED, OR ADDITIONAL ROCK SHALL BE PLACED UPON THE PAD SURFACE. ROCK SHALL BE 4"-8" QUARRY SPALLS.

   C. ALL MATERIALS SPILLED, DROPPED, WASHED, OR TRACKED FROM VEHICLES ONTO ROADWAYS OR INTO STORM DRAINS MUST BE REMOVED IMMEDIATELY WITH VACUUM SWEEPER OR OTHER MEANS AS APPROVED BY THE ONSITE ENGINEER.

   D. INSTALL STORM DRAIN INLET PROTECTION AS SHOWN ON THE EROSION CONTROL PLAN AND STANDARD DETAILS TO PREVENT EROSION AND POLLUTION FROM ENTERING THE STORM DRAINAGE SYSTEM. CLEAN THE FILTER AS NECESSARY TO MAINTAIN DRAINAGE AND PROVIDE APPROVED TRAFFIC CONTROL DEVICES AS NECESSARY FOR THE PROTECTION DEVICES. REMOVE FILTER AND CLEAN CATCH BASINS FOLLOWING COMPLETION OF SITEWORK.

   E. INSTALL SILT FENCE PRIOR TO EXCAVATION AS SHOWN ON THE EROSION CONTROL STANDARD DETAIL TO PREVENT SILT INTRUSION UPON ADJACENT LAND AND THE COLUMBIA RIVER. FOR MAINTENANCE AND REMOVAL OF SILT FENCE, SEE THE SILT FENCE GENERAL NOTES.

10\. IN AREAS SUBJECT TO SURFACE AND AIR MOVEMENT OF DUST, WHERE ON-SITE OR OFF-SITE DAMAGE IS LIKELY TO OCCUR, ONE OR MORE OF THE FOLLOWING PREVENTIVE MEASURES SHALL BE TAKEN FOR DUST CONTROL:

   A. MINIMIZE THE PERIOD OF SOIL EXPOSURE THROUGH THE USE OF TEMPORARY GROUND COVER AND OTHER TEMPORARY STABILIZATION PRACTICES.

   B. THE SITE IS SPRINKLED WITH WATER UNTIL SURFACE IS WET. REPEAT AS NEEDED. TO PREVENT CARRY OUT OF MUD ONTO STREET, REFER TO PROTECTION OF SURFACES.

   C. SPRAY EXPOSED SOIL AREAS WITH DUST PALLIATIVE. NOTE: USED OIL IS PROHIBITED FOR USE AS A PALLIATIVE.

11\. TEMPORARY SEEDING AND/OR MULCH SHALL BE PLACED ON EXPOSED SURFACES THAT WILL NOT BE BROUGHT TO FINAL GRADING OR PERMANENT COVER TREATMENT OR VEGETATION WITHIN 7 DAYS OF THE EXPOSURE TO REDUCE EROSION AND SEDIMENTATION BY STABILIZING EXPOSED SOILS. DURING THE TIME PERIOD OCTOBER 1 THROUGH APRIL 30, NO SOILS SHALL BE EXPOSED FOR MORE THAN 2 DAYS. SEEDED AREAS SHALL BE CHECKED REGULARLY TO ASSURE A GOOD STANDARD OF GRASS IS BEING MAINTAINED. AREAS THAT FAIL TO ESTABLISH VEGETATION COVER ADEQUATE TO PREVENT SLOPE EROSION WILL BE RESEEDED AS SOON AS SUCH AREAS ARE IDENTIFIED.

   A. APPLY THE FOLLOWING TEMPORARY SEEDING MIXTURE (GIVEN IN PROPORTIONS BY WEIGHT) TO THE PREPARED SEED BED AT A RATE OF 120 LBS/ACRE:

   -10% REDTOP AT 92% PURITY AND 90% GERMINATION

   -40% ANNUAL RYE AT 98% PURITY AND 90% GERMINATION

   -40% CHEWINGS FESCUE AT 97% PURITY AND 80% GERMINATION

   -10% WHITE DUTCH CLOVER AT 90% PURITY AND 90% GERMINATION

   NOTE: "HYDROSEEDING" APPLICATIONS WITH APPROVED SEED-MULCH-FERTILIZER MIXTURES MAY ALSO BE USED.

12\. EROSION CONTROL NETS AND BLANKETS SHALL BE INSTALLED ON EXPOSED SLOPES 2H:1V OR GREATER AND/OR ON EXPOSED SLOPES WITH MORE THAN 10 FEET OF VERTICAL RELIEF.

13\. ALL INCOMPLETE MANHOLES AND OTHER DROP INLETS SHALL BE PROTECTED WITH A SILT-SAVER FRAME AND FILTER ASSEMBLY

14\. ALL PESTICIDES, PETROLEUM PRODUCTS, CHEMICALS OR OTHER POTENTIAL POLLUTANTS SHALL BE ADMINISTERED RESPONSIBLY WITH DISPOSAL AND SPILLS HANDLED IN ACCORDANCE WITH ALL LOCAL, STATE AND FEDERAL REQUIREMENTS.

15\. THE CONTRACTOR SHALL PROVIDE A SEPARATE AREA, A MINIMUM OF 200 SQUARE FEET IN SIZE FOR WASHING OF CONCRETE TRUCKS. THIS AREA SHALL ALSO BE ISOLATED SO THAT NO WATER ENTERS THE STORM DRAINAGE SYSTEM.

16\. FAILURE TO COMPLY WITH THESE EROSION CONTROL REQUIREMENTS MAY RESULT IN A STOP WORK ORDER.

17\. DOWNSTREAM MONITORING MAY BE REQUIRED TO VERIFY ADEQUATE EROSION CONTROL OF WORK AREA.

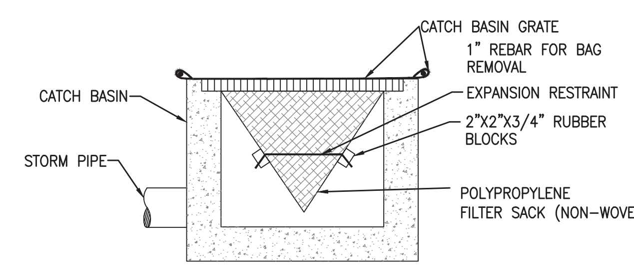

WOVEN POLYPROPYLENE SACK

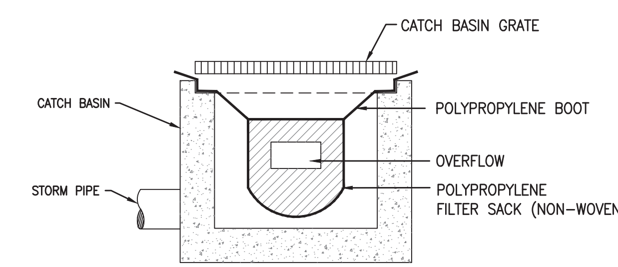

NON-WOVEN POLYPROPYLENE SACK

NOTES:

1. RECESSED CURB INLET CATCH BASINS MUST BE BLOCKED WHEN USING FILTER FABRIC INLET SACKS, SIZE OF FILTER INLET SACK TO BE DETERMINED BY MANUFACTURER.
2. THE CONTRACTOR SHALL INSPECT THE FILTER WEEKLY AND DAILY DURING PERIODS OF FREQUENT RAIN.
3. FILTER SHALL BE CLEANED IN A MANNER WHICH ENSURES THAT ALL SEDIMENT REMAINS ON SITE.
4. THE FILTER SHALL BE REPLACED OR CLEANED WHEN THE BAG BECOMES HALF FULL.

INLET PROTECTION CATCH BASIN/AREA INSERT

JANE W. VAIL
STATE OF WASHINGTON
52800
REGISTERED
PROFESSIONAL ENGINEER
PRELIMINARY

NO.	REVISION	BY	DATE

DESIGNED BY: JV
DRAWN BY: CK
REV: DB

ONE INCH
0 — 1"
ONE INCH AT FULL SCALE. IF NOT ONE INCH ADJUST SCALE ACCORDINGLY

EROSION CONTROL DETAILS

wallis engineering
215 W 4th Street, Suite 200
Vancouver, WA 98660
360.695.7041

PROJECT NO: 1464A
DATE: 3/2019

PORT OF SKAMANIA COUNTY WATERFRONT TRAIL IMPROVEMENTS

PORT of SKAMANIA COUNTY

DRAWING NO:

C4

P:\14\1464A Waterfront Trail\500 DWG\501 Plan Sheets\4 EROSION CONTROL DETAILS.dwg, 3/14/2019 9:56:54 AM, Chad Kays

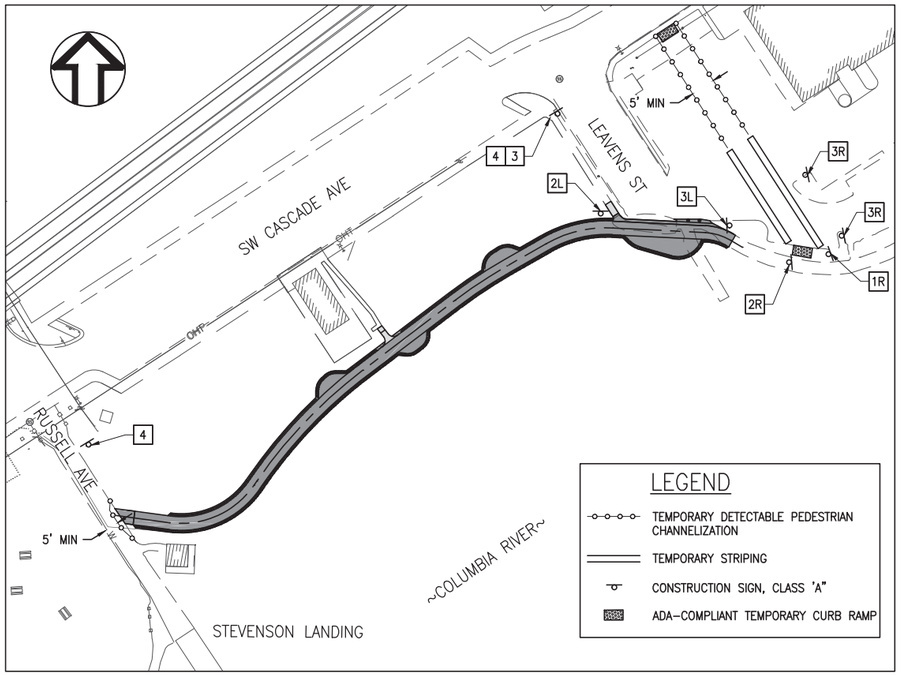

TEMPORARY TRAFFIC CONTROL PLAN

NTS

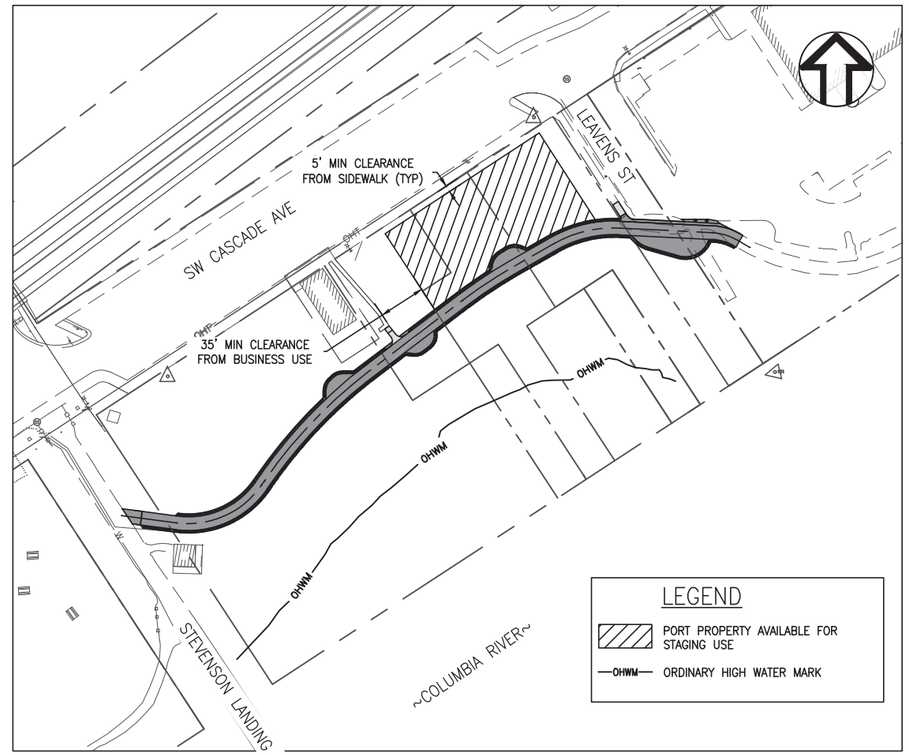

STAGING AREA

NTS

GENERAL TRAFFIC CONTROL NOTES

1. MINIMUM TRAFFIC CONTROL SIGNING NOTED ON THIS SHEET SHALL BE INSTALLED PRIOR TO START OF ANY OTHER WORK ON THE PROJECT. COORDINATE ACTUAL SIGN LOCATIONS WITH ENGINEER PRIOR TO INSTALLATION.
2. TRAFFIC CONTROL PLANS FOR WORK ARE SHOWN HEREIN. CONTRACTOR SHALL ADOPT THE GENERAL TRAFFIC CONTROL/STAGING PLAN AND REQUIREMENTS INCLUDED HEREIN AND/OR SUBMIT A NEW GENERAL PLAN FOR REVIEW. THIS GENERAL TRAFFIC CONTROL PLAN DOES NOT RELIEVE THE CONTRACTOR FROM THE RESPONSIBILITY TO SUBMIT DETAILED TRAFFIC CONTROL PLANS SPECIFIC TO THE CONTRACTOR'S PHASING OF THE WORK AS DEEMED NECESSARY BY THE ENGINEER. TRAFFIC CONTROL PLANS MUST BE APPROVED BY THE ENGINEER PRIOR TO BEGINNING CONSTRUCTION.
3. THE CONTRACTOR SHALL PROVIDE TEMPORARY PROTECTION AND DIRECTION OF TRAFFIC IN ACCORDANCE WITH THE MOST CURRENT VERSION OF THE MUTCD (WITH WASHINGTON STATE AMENDMENTS, WSDOT STANDARD PLANS AND SPECIFICATIONS, AND THE CONTRACT SPECIAL PROVISIONS.)
4. USE TEMPORARY PAVEMENT MARKERS, BARRIERS, BARRICADES, CAUTION TAPE AND SIGNS AS REQUIRED TO SAFELY DETOUR PEDESTRIANS AND VEHICLE TRAFFIC AROUND THE CONSTRUCTION WORK AREA. IDENTIFY THE TYPE OF DELINEATION FOR ALL TEMPORARY TRAFFIC CONTROL MEASURES ON TRAFFIC CONTROL PLANS.
5. APPROPRIATE METHODS OF PEDESTRIAN, BICYCLE, AND VEHICULAR TRAFFIC CONTROL, INCLUDING FLAGGERS, SHALL BE EMPLOYED BY THE CONTRACTOR TO THE EXTENT DEEMED NECESSARY BY THE TRAFFIC CONTROL SUPERVISOR AND AS REQUIRED BY THE PORT OF SKAMANIA COUNTY TO PROTECT WORKERS AND THIRD PARTIES.
6. ACCESS FOR EMERGENCY SERVICES SHALL BE MAINTAINED AT ALL TIMES. CONTRACTOR SHALL INFORM EMERGENCY SERVICES OF ALL TRAFFIC CONTROL MODIFICATIONS PRIOR TO IMPLEMENTATION.
7. TEMPORARY DETECTABLE PEDESTRIAN CHANNELIZATION SHALL PROVIDE A MINIMUM 5-FT WIDE TRAVEL ROUTE.

SPECIFIC TRAFFIC CONTROL REQUIREMENTS

1. THE CONTRACTOR SHALL PROVIDE TEMPORARY PROTECTION AND DIRECTION OF PEDESTRIAN TRAFFIC ON RUSSELL AVENUE, THE SIDEWALK ON LEAVENS STREET, AND THE EXISTING PATH AT LEAVEN'S POINT. PEDESTRIAN DETOURS SHALL BE ESTABLISHED WHEN EXISTING FACILITIES ARE INACCESSIBLE, AS SHOWN. ADA-COMPLIANT TEMPORARY CURB RAMPS SHALL BE PROVIDED WHERE SHOWN AND AS NEEDED. DETOURS SHALL BE REMOVED AND ACCESS SHALL BE RE-ESTABLISHED AT THE END OF EACH WORKING DAY.
2. RUSSELL AVENUE IS CLOSED TO VEHICULAR TRAFFIC AND IS EQUIPPED WITH A LOCKABLE BOLLARD AT CASCADE AVENUE. VEHICULAR ACCESS ON RUSSELL AVENUE IS NORMALLY RESTRICTED TO EMERGENCY VEHICLES, GARBAGE PICKUP, AND MAINTENANCE VEHICLES ONLY. CONTRACTOR SHALL COORDINATE WITH THE PORT A MINIMUM OF ONE WORKING DAY PRIOR TO PLANNED VEHICULAR AND EQUIPMENT USE OF RUSSELL AVENUE. WHEN WORKING ON RUSSELL AVENUE, THE CONTRACTOR SHALL MAINTAIN VEHICULAR ACCESS TO GARBAGE, MAINTENANCE, AND EMERGENCY VEHICLES AT ALL TIMES.
3. LEAVENS STREET WITHIN THE PROJECT LIMITS IS OWNED BY THE PORT OF SKAMANIA COUNTY, AND IS UTILIZED DAILY BY DELIVERY VEHICLES TRAVELING FROM MULTIPLE BUSINESSES LEASING PORT PROPERTY. THESE VEHICLES INCLUDE LARGE DELIVERY TRUCKS. VEHICULAR ACCESS TO AND FROM PORT OF SKAMANIA-OWNED PROPERTIES SHALL BE MAINTAINED AT ALL TIMES.
4. STEVENSON LANDING IS A CRUISE SHIP PIER, AND CONSIDERABLE PEDESTRIAN TRAFFIC UTILIZES RUSSELL AVENUE BETWEEN STEVENSON LANDING AND CASCADE AVENUE. THE CONTRACTOR SHALL MAINTAIN ACCESS TO THIS PEDESTRIAN FACILITY AT ALL TIMES. IF PEDESTRIAN CHANNELIZATION IS USED FOR TEMPORARY TRAFFIC CONTROL ON RUSSELL AVE IN ORDER TO CONSTRUCT IMPROVEMENTS, THIS CHANNELIZATION SHALL BE REMOVED AND FULL ACCESS RE-ESTABLISHED BY END OF EACH WORKING DAY.
5. THE EXISTING ASPHALT PATH CURRENTLY CONNECTS TO EXISTING SIDEWALK ON LEAVENS STREET, AT LEAVEN'S POINT. THE CONTRACTOR SHALL MAINTAIN A 5-FOOT MINIMUM WIDE DESIGNATED PEDESTRIAN ROUTE FROM THE EXISTING TRAIL TO THE EXISTING SIDEWALK ON CASCADE AVENUE WHEN THIS CONNECTION IS INTERRUPTED. ACCESS BETWEEN THE EXISTING TRAIL AND SIDEWALK SHALL BE RE-ESTABLISHED AT THE END OF EACH WORKING DAY. TEMPORARY PAVEMENT MARKING TAPE MAY BE USED WITHIN THE PARKING LOT TO DELINEATE THE PEDESTRIAN TRAVEL WAY.

1 M4-9B
NTS
(L OR R)

3 R1-5
NTS
(L OR R)

2 R9-11
NTS
(L OR R)

4 W20-1
NTS

GENERAL CONSTRUCTION PHASING AND STAGING NOTES

1. THE CONTRACTOR SHALL COMPLETE THE PROJECT IN ACCORDANCE WITH AN APPROVED PHASING PLAN AND WITH THE SPECIAL PROVISIONS. THIS SHEET REFLECTS THE GENERAL PHASING AND TRAFFIC CONTROL REQUIREMENTS FOR THE PROJECT. THE CONTRACTOR SHALL SUBMIT A DETAILED PHASING PLAN FOR REVIEW/APPROVAL OF THE ENGINEER PRIOR TO BEGINNING WORK.
2. VEHICULAR ACCESS TO RUSSELL AVENUE BETWEEN CASCADE AVENUE AND STEVENSON LANDING IS RESTRICTED BY A REMOVABLE BOLLARD. THIS SECTION OF RUSSELL AVENUE IS A PEDESTRIAN FACILITY, WITH CURRENT VEHICULAR USE RESTRICTED TO GARBAGE TRUCKS AND EMERGENCY ACCESS. CONTRACTOR SHALL COORDINATE WITH PORT OF SKAMANIA FOR TRUCK AND EQUIPMENT ACCESS ON THIS PORTION OF RUSSELL AVENUE ON AN AS-NEEDED BASIS.
3. CONTRACTOR SHALL PHASE WORK TO ENSURE PEDESTRIAN ACCESS THROUGH RUSSELL AVENUE BETWEEN STEVENSON LANDING AND CASCADE AVENUE. CONTRACTOR SHALL PHASE WORK IN THIS AREA TO MINIMIZE THE DURATION OF ADVERSE IMPACTS ON PEDESTRIAN USE.
4. STAGING AREAS SHALL BE LIMITED TO THOSE SHOWN UNLESS OTHERWISE APPROVED BY THE ENGINEER. ALL STAGING AREAS SHALL BE KEPT IN A CLEAN AND ORGANIZED FASHION.
5. ACCESS TO THE PORTION OF LEAVENS STREET SHOULD BE MAINTAINED THROUGHOUT CONSTRUCTION. LEAVENS STREET SOUTH OF CASCADE AVENUE IS WITHIN PORT OF SKAMANIA PROPERTY, AND IS USED BY BUSINESSES LEASING THIS PROPERTY. THIS PORTION OF LEAVENS STREET IS REGULARLY USED BY LARGE BEVERAGE DISTRIBUTION TRUCKS. COORDINATE ANY CONSTRUCTION USE OF THIS STREET AND PARKING LOT WITH THE PORT OF SKAMANIA COUNTY PRIOR TO USE.
6. MATERIALS MAY NOT BE STORED OR STOCKPILED, NOR MAY EQUIPMENT THAT IS NOT OPERATING BE PARKED ON PUBLIC CITY-OWNED STREETS WITHIN THE PROJECT LIMITS.
7. MATERIALS AND EQUIPMENT MAY NOT BE PLACED OR STAGED ON THE SLOPE SOUTH OF THE PROPOSED PATH, OR BELOW THE ORDINARY HIGH WATER MARK. NO WORK OR STAGING MAY TAKE PLACE BELOW THE ORDINARY HIGH WATER MARK.

JANE W. VALLEY
STATE OF WASHINGTON
52600
REGISTERED
PROFESSIONAL ENGINEER
PRELIMINARY

NO.	REVISION	BY	DATE

DESIGNED BY: JV
DRAWN BY: CK
REV: DB

ONE INCH
0 1"
ONE INCH AT FULL SCALE. IF NOT ONE INCH ADJUST SCALE ACCORDINGLY

STAGING & TRAFFIC CONTROL PLAN

wallis engineering
215 W 4th Street, Suite 200
Vancouver, WA 98660
360.695.7879

PROJECT NO: 1464A
DATE: 3/2019

PORT OF SKAMANIA COUNTY WATERFRONT TRAIL IMPROVEMENTS

PORT OF SKAMANIA COUNTY

DRAWING NO:
C5

P:\14\1464A Waterfront Trail\300 DWG\301 Plan Sheets\5 STAGING & TRAFFIC CONTROL PLAN.dwg, 3/14/2019 11:54:21 AM, Chad Keys

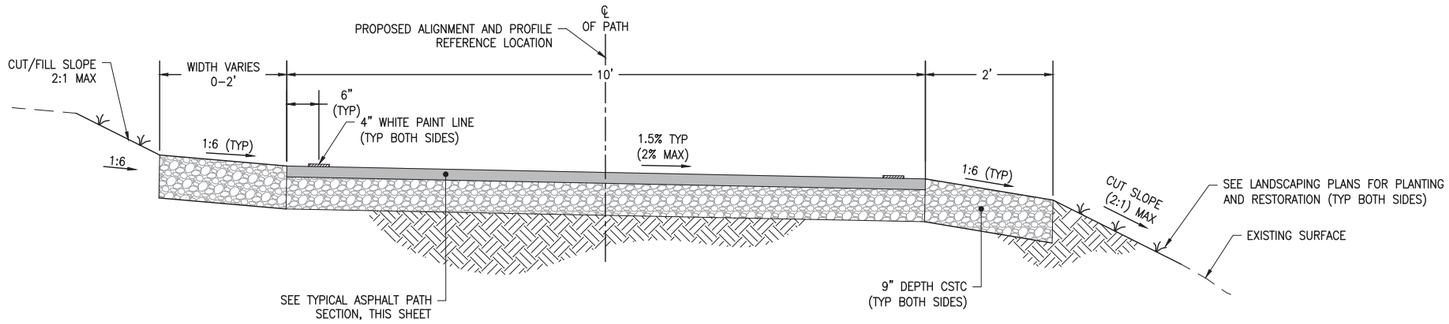

PATH TYPICAL SECTION
STA 0+14.72 TO 2+30.00
NTS

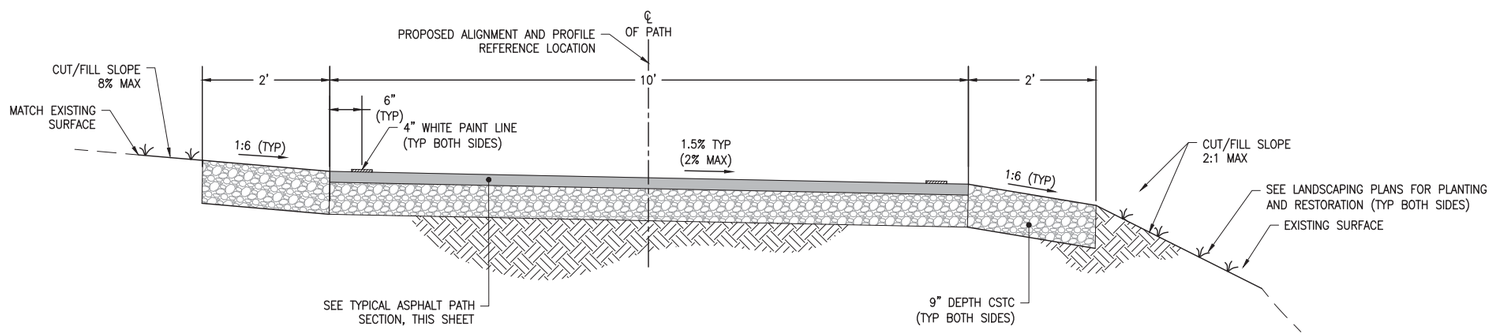

PATH TYPICAL SECTION
STA 2+30.00 TO 4+36.64
NTS

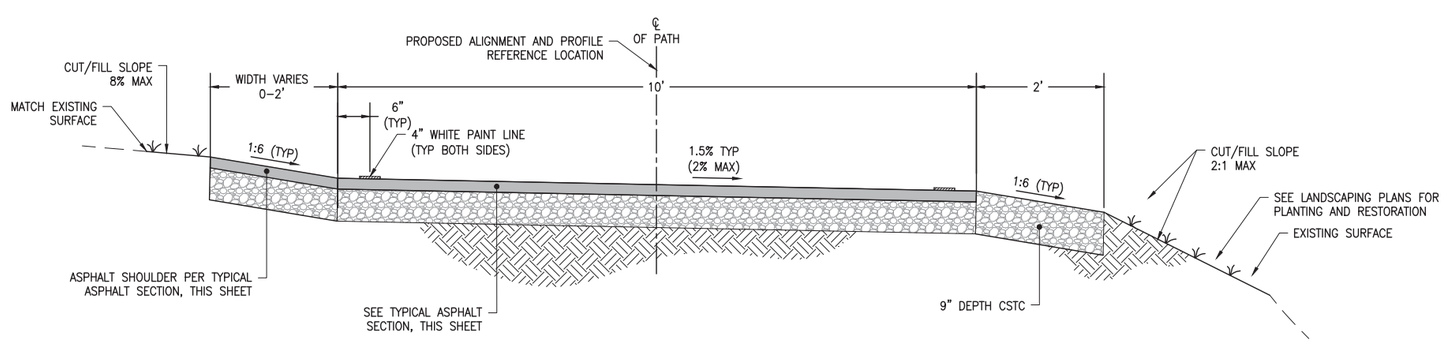

PATH TYPICAL SECTION
STA 4+36.64 TO END
NTS

TYPICAL SECTION NOTES

1. SEE PLAN SHEETS FOR ACTUAL SURFACING CHANGES, WIDTHS, AND LAYOUT.
2. COORDINATE PROPOSED PATH AND SIDEWALK LAYOUT WITH ONSITE ENGINEER PRIOR TO MAKING ALL SAWCUTS FOR TRANSITIONS FROM PROPOSED IMPROVEMENTS BACK TO EXISTING.
3. PRIOR TO PLACING FILLS, STRIP EXISTING GROUND A MINIMUM DEPTH OF 6" IN ACCORDANCE WITH SECTION 2–01.3(2) OF THE STANDARD SPECIFICATIONS.
4. COMMON BORROW FILL SHALL MEET THE REQUIREMENTS OF SECTION 9–03.14(3).
5. SUBGRADE AND COMMON BORROW FILL SHALL BE COMPACTED IN CONFORMANCE WITH METHOD B OF SECTION 2–03.3(14)C.
6. ALL CRUSHED SURFACING SHALL BE COMPACTED TO 95% MAXIMUM DRY DENSITY PER ASTM D698.
7. ROUND ALL GRADING TRANSITIONS.

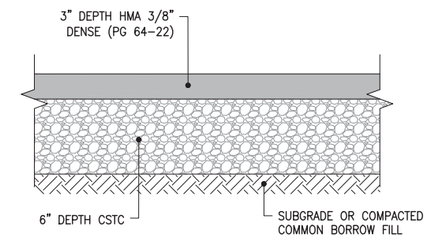

TYPICAL ASPHALT SECTION
NTS

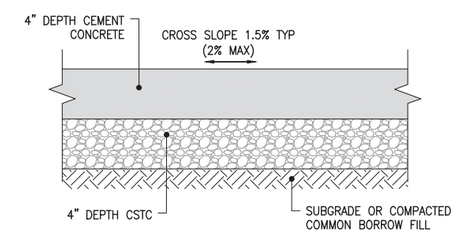

TYPICAL CONCRETE SIDEWALK SECTION
NTS

PRELIMINARY

NO.	REVISION	BY	DATE

DESIGNED BY: JV
DRAWN BY: CK
REV: DB

ONE INCH 0 1"
ONE INCH AT FULL SCALE. IF NOT ONE INCH ADJUST SCALE ACCORDINGLY

TYPICAL SECTIONS

wallis engineering
215 W 4th Street, Suite 200
Vancouver, WA 98660
360.695.7041

PROJECT NO: 1464A
DATE: 3/2019

PORT OF SKAMANIA COUNTY WATERFRONT TRAIL IMPROVEMENTS

PORT of SKAMANIA COUNTY

DRAWING NO:
C6

P:\14\1464A Waterfront Trail\500 DWG\501 Plan Sheets\5 TYPICAL SECTIONS.dwg, 3/14/2019 9:57:14 AM, Chad Kays

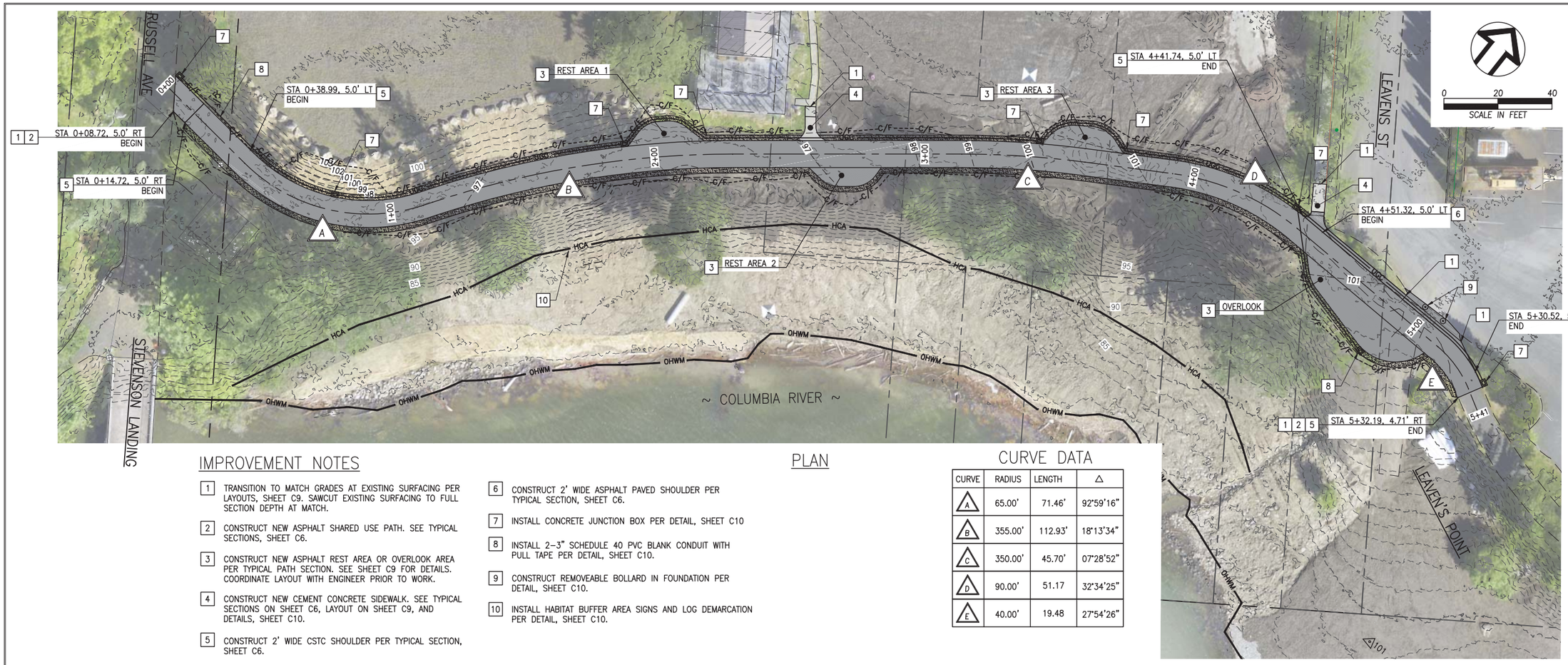

PLAN

IMPROVEMENT NOTES

1. TRANSITION TO MATCH GRADES AT EXISTING SURFACING PER LAYOUTS, SHEET C9. SAWCUT EXISTING SURFACING TO FULL SECTION DEPTH AT MATCH.
2. CONSTRUCT NEW ASPHALT SHARED USE PATH. SEE TYPICAL SECTIONS, SHEET C6.
3. CONSTRUCT NEW ASPHALT REST AREA OR OVERLOOK AREA PER TYPICAL PATH SECTION. SEE SHEET C9 FOR DETAILS. COORDINATE LAYOUT WITH ENGINEER PRIOR TO WORK.
4. CONSTRUCT NEW CEMENT CONCRETE SIDEWALK. SEE TYPICAL SECTIONS ON SHEET C6, LAYOUT ON SHEET C9, AND DETAILS, SHEET C10.
5. CONSTRUCT 2' WIDE CSTC SHOULDER PER TYPICAL SECTION, SHEET C6.
6. CONSTRUCT 2' WIDE ASPHALT PAVED SHOULDER PER TYPICAL SECTION, SHEET C6.
7. INSTALL CONCRETE JUNCTION BOX PER DETAIL, SHEET C10
8. INSTALL 2-3" SCHEDULE 40 PVC BLANK CONDUIT WITH PULL TAPE PER DETAIL, SHEET C10.
9. CONSTRUCT REMOVEABLE BOLLARD IN FOUNDATION PER DETAIL, SHEET C10.
10. INSTALL HABITAT BUFFER AREA SIGNS AND LOG DEMARCATION PER DETAIL, SHEET C10.

CURVE DATA

CURVE	RADIUS	LENGTH	△
A	65.00'	71.46'	92°59'16"
B	355.00'	112.93'	18°13'34"
C	350.00'	45.70'	07°28'52"
D	90.00'	51.17	32°34'25"
E	40.00'	19.48	27°54'26"

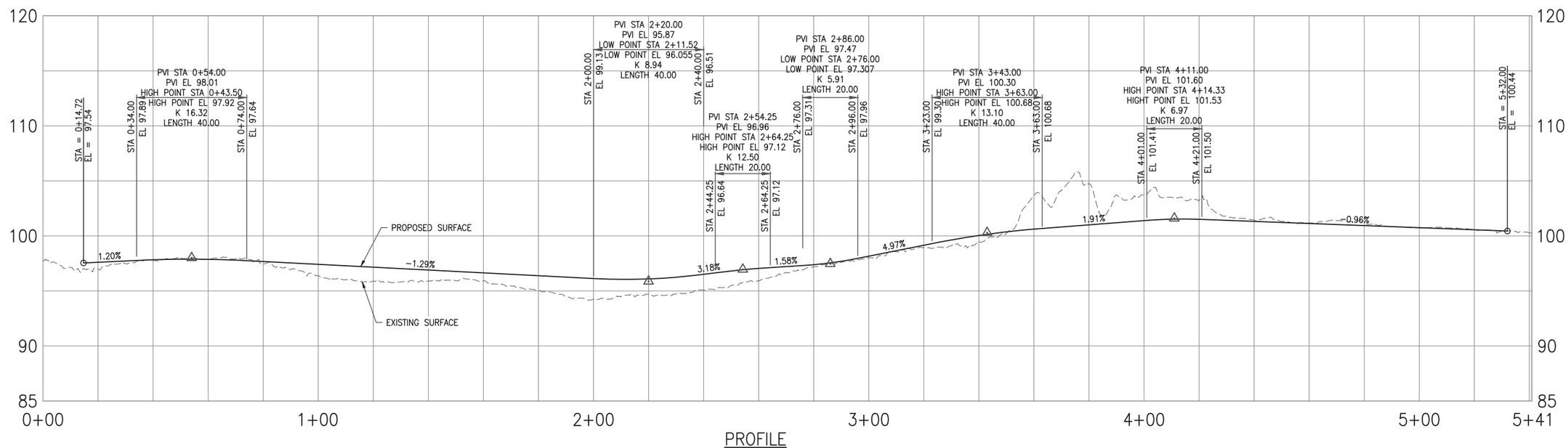

PROFILE

SCALE: 1" = 20' HORIZ
1" = 5' VERT

PROFESSIONAL ENGINEER
JANE W. VALLEY
STATE OF WASHINGTON
52800
REGISTERED PROFESSIONAL ENGINEER

NO.	REVISION	BY	DATE

DESIGNED BY: JV
DRAWN BY: CK
REV: DB

ONE INCH 0 1"
ONE INCH AT FULL SCALE. IF NOT ONE INCH ADJUST SCALE ACCORDINGLY

IMPROVEMENT PLAN

wallis engineering
215 W 4th Street, Suite 200
Vancouver, WA 98660
360.695.7041

PROJECT NO: 1464A
DATE: 3/2019

PORT OF SKAMANIA COUNTY WATERFRONT TRAIL IMPROVEMENTS

PORT of SKAMANIA COUNTY

DRAWING NO:
C7

P:\14\1464A Waterfront Trail\500 DWG\501 Plan Sheets\6 IMPROVEMENT PLANS.dwg, 3/14/2019 9:57:21 AM, Chad Kays

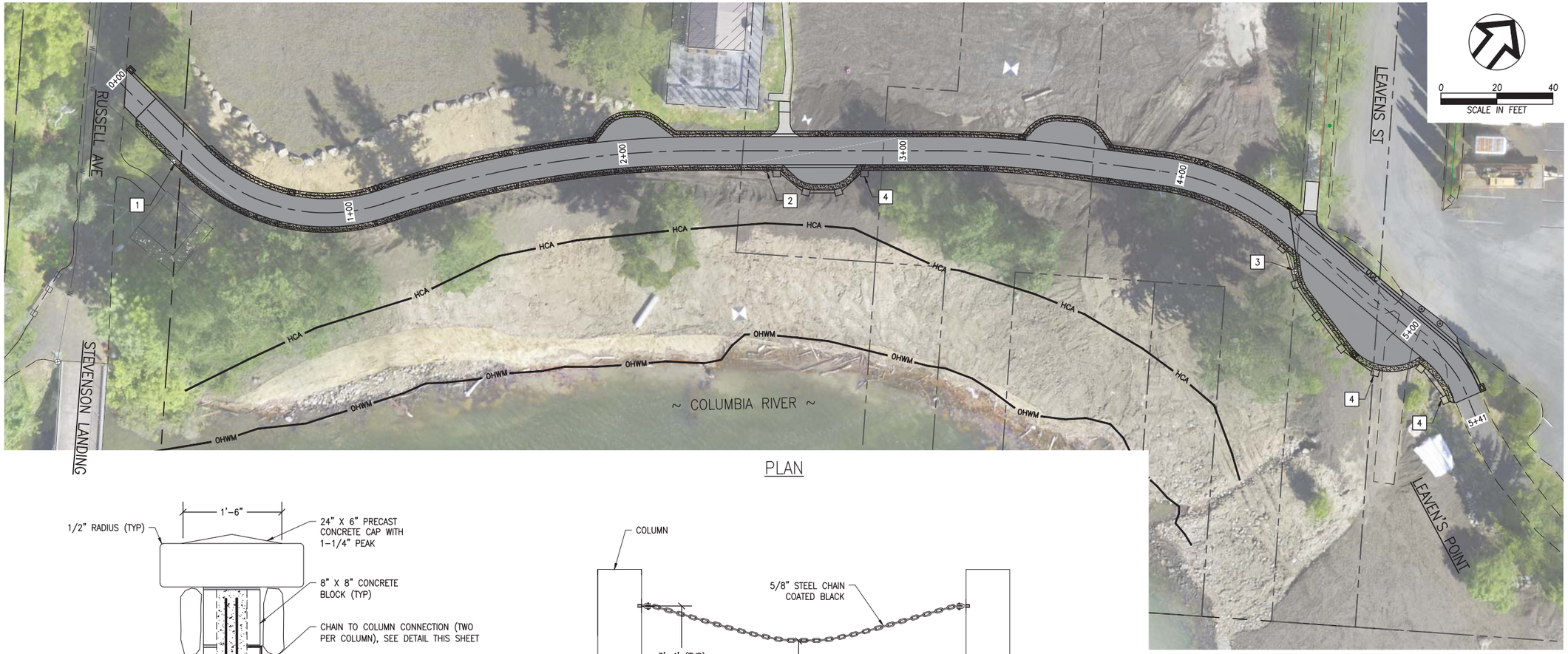

PLAN

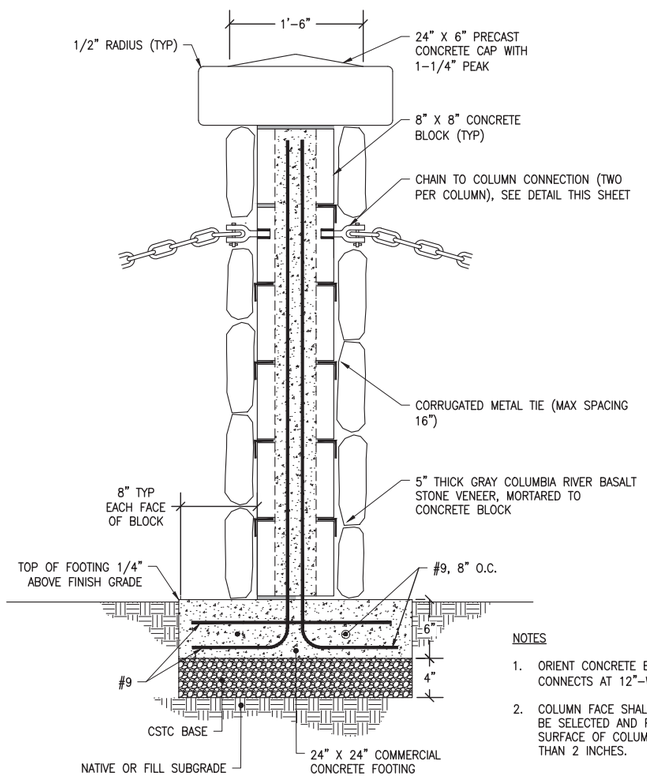

NOTES

1. ORIENT CONCRETE BLOCKS SUCH THAT CHAIN CONNECTS AT 12"-WIDE FACE OF BLOCK.
2. COLUMN FACE SHALL BE PLUMB. STONES SHALL BE SELECTED AND PLACED SUCH THAT FINISH SURFACE OF COLUMN DOES NOT VARY MORE THAN 2 INCHES.

MASONRY COLUMN DETAIL

NTS

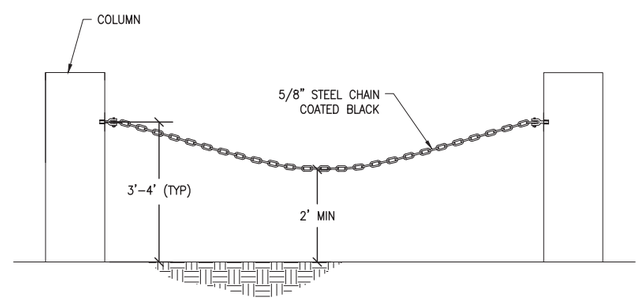

LINK CHAIN DETAIL

NTS

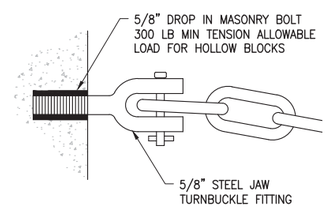

CHAIN TO COLUMN CONNECTION DETAIL

NTS

NOTES:

1. THIS PLAN SHEET SHOWS WORK TO INCLUDED IN ADDED ALTERNATIVE BID SCHEDULES. CONSTRUCT THOSE IMPROVEMENTS WHICH ARE INCLUDED IN BID SCHEDULES INCLUDED IN THE FINAL AWARDED BID.

ADDED ALTERNATIVE IMPROVEMENT NOTES

1. CONNECT TO EXISTING SERVICE WITH 3/4" BRONZE TEE AND ADDITIONAL NECESSARY FITTINGS. INSTALL TWO TYPE K COPPER SERVICE LINES WITHIN PATH SHOULDER FROM TEE TO STRUCTURE. IF WATER FOUNTAIN IS NOT SELECTED AS PART OF THE CONTRACT, INSTALL COUPLING IN PLACE OF TEE, AND INSTALL ONLY ONE SERVICE LINE.
2. CONSTRUCT FROST FREE LOCKABLE YARD HYDRANT AT END OF 3/4" SERVICE LINE.
3. INSTALL BALL VALVE AT END OF 3/4" SERVICE LINE. INSTALL CAST IRON VALVE CAN FOR FUTURE WATER FOUNTAIN CONNECTION, FLUSH WITH FINISH GROUND SURFACE.
4. CONSTRUCT MASONRY COLUMNS AND LINK CHAIN PER DETAIL, THIS SHEET.

PRELIMINARY
JANE W. VALLEY
STATE OF WASHINGTON
52600
REGISTERED PROFESSIONAL ENGINEER

NO.	REVISION	BY	DATE

DESIGNED BY: JV
DRAWN BY: CK
REV: DB

ONE INCH 0 1"
ONE INCH AT FULL SCALE, IF NOT ONE INCH ADJUST SCALE ACCORDINGLY

ADDED ALTERNATIVE IMPROVEMENT PLAN

wallis engineering
215 W 4th Street, Suite 200
Vancouver, WA 98660
360.567.3011

PROJECT NO: 1464A
DATE: 3/2019

PORT OF SKAMANIA COUNTY WATERFRONT TRAIL IMPROVEMENTS

PORT of SKAMANIA COUNTY

DRAWING NO:
C8

P:\14\1464A Waterfront Trail\500 DWG\501 Plan Sheets\8 ADDED ALTERNATIVE IMPROVEMENT PLAN.dwg, 3/14/2019 9:57:28 AM, Chad Keys

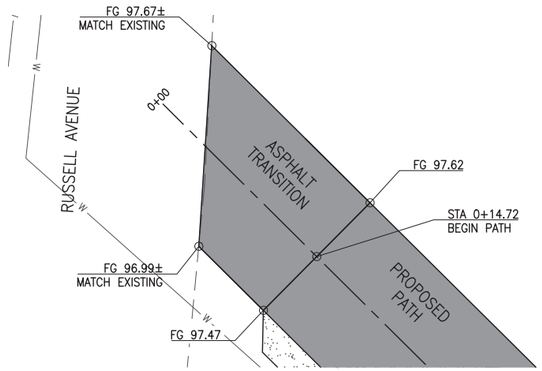

RUSSELL AVENUE CONNECTION

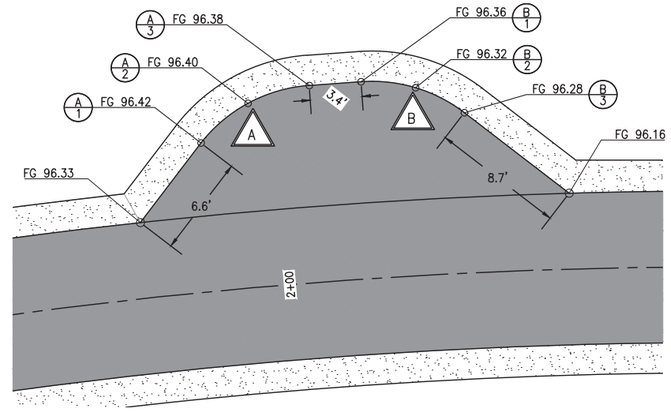

REST AREA 1

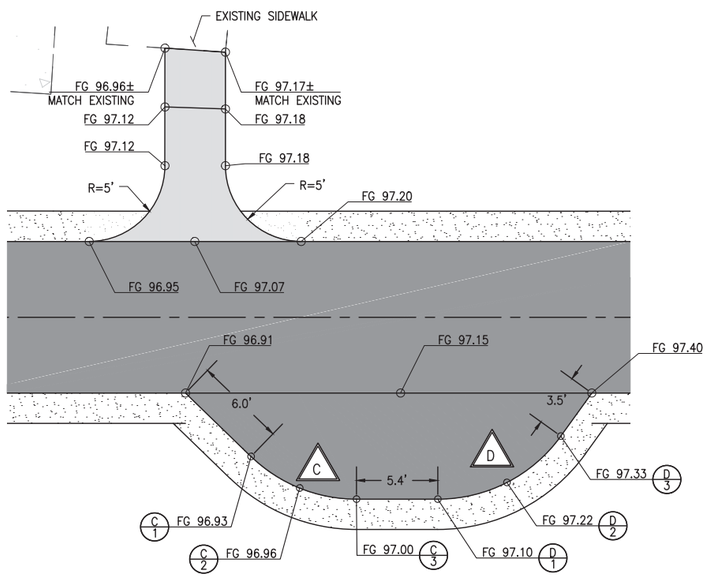

REST AREA 2 & SIDEWALK CONNECTION 1

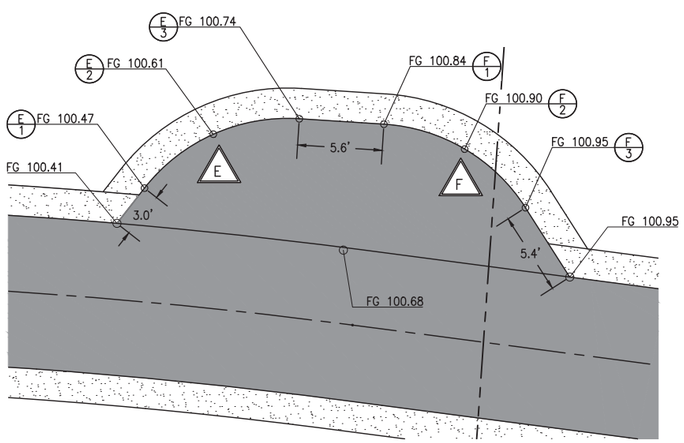

REST AREA 3

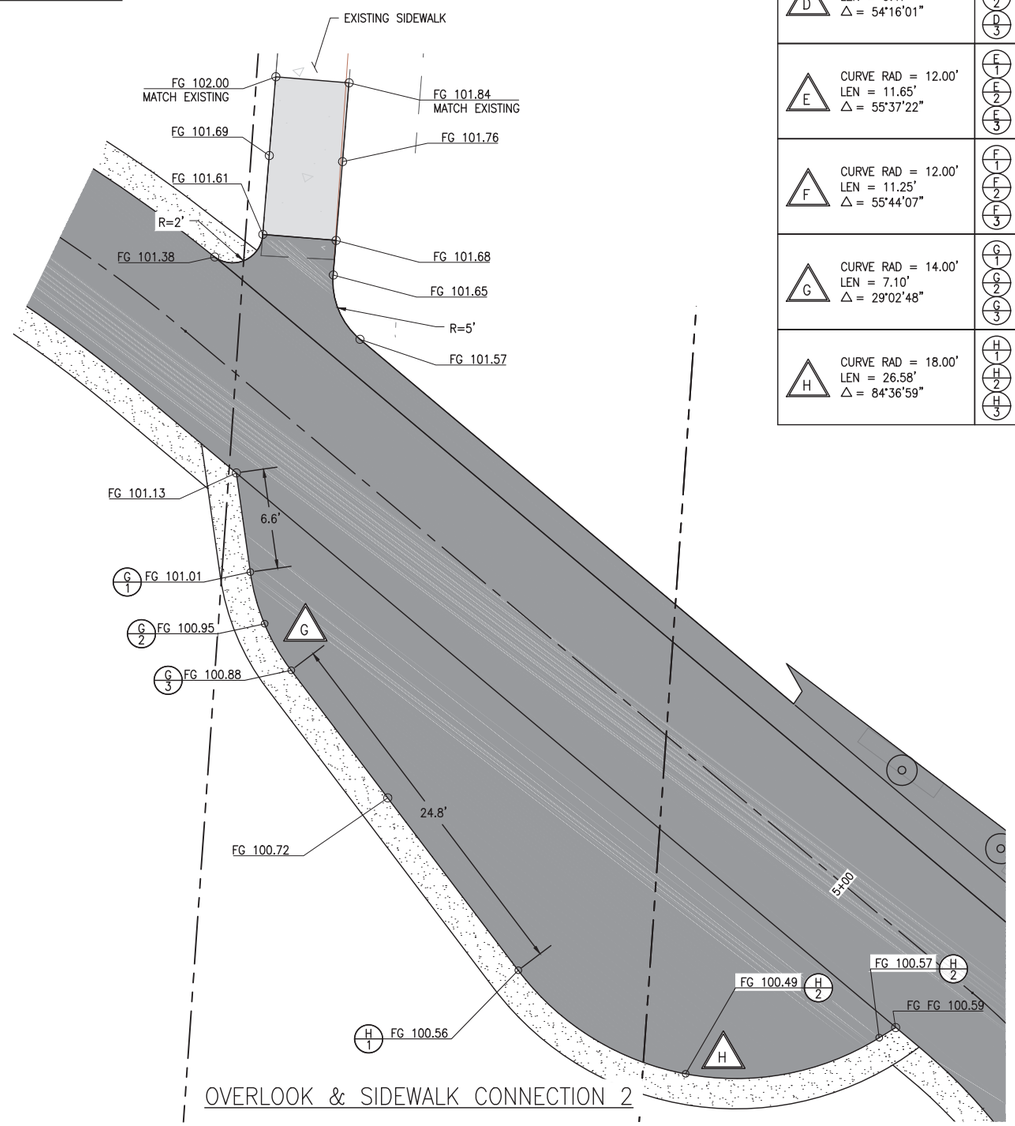

OVERLOOK & SIDEWALK CONNECTION 2

0 5 10
SCALE IN FEET

CURVE DATA

TYPE	CURVE POINT	LOCATION	CENTERLINE STA	OFFSET
A: CURVE RAD = 10.00' LEN = 8.48' Δ = 48°33'36"	A 1	PC	STA 1+94.94	9.71' LT
	A 2	MID	STA 1+98.27	12.14' LT
	A 3	PT	STA 2+02.25	12.99' LT
B: CURVE RAD = 10.00' LEN = 7.27' Δ = 41°40'14"	B 1	PC	STA 2+05.56	12.99' LT
	B 2	MID	STA 2+09.00	12.39' LT
	B 3	PT	STA 2+12.03	10.57' LT
C: CURVE RAD = 10.00' LEN = 9.47' Δ = 54°16'01"	C 1	PC	STA 2+61.45	9.19' RT
	C 2	MID	STA 2+64.65	11.27' RT
	C 3	PT	STA 2+68.40	12.00' RT
D: CURVE RAD = 10.00' LEN = 9.47' Δ = 54°16'01"	D 1	PC	STA 2+73.77	12.00' RT
	D 2	MID	STA 2+78.33	10.90' RT
	D 3	PT	STA 2+81.89	7.84' RT
E: CURVE RAD = 12.00' LEN = 11.65' Δ = 55°37'22"	E 1	PC	STA 3+44.94	7.47' LT
	E 2	MID	STA 3+49.01	11.47' LT
	E 3	PT	STA 3+54.36	13.07' LT
F: CURVE RAD = 12.00' LEN = 11.25' Δ = 55°44'07"	F 1	PC	STA 3+59.75	13.41' LT
	F 2	MID	STA 3+65.24	12.47' LT
	F 3	PT	STA 3+69.72	9.15' LT
G: CURVE RAD = 14.00' LEN = 7.10' Δ = 29°02'48"	G 1	PC	STA 4+56.83	9.41' RT
	G 2	MID	STA 4+59.74	11.42' RT
	G 3	PT	STA 4+63.07	12.64' RT
H: CURVE RAD = 18.00' LEN = 26.58' Δ = 84°36'59"	H 1	PC	STA 4+87.27	18.15' RT
	H 2	MID	STA 5+00.13	16.27' RT
	H 3	PT	STA 5+08.37	6.23' RT

ABBREVIATIONS

PC = POINT OF CURVATURE
PT = POINT OF TANGENT
MID = MID POINT OF CURVE
FG = FINISH GRADE

JANE W. VALLEY
STATE OF WASHINGTON
42800
REGISTERED PROFESSIONAL ENGINEER
PRELIMINARY

NO.	REVISION	BY	DATE

DESIGNED BY: JV
DRAWN BY: CK
REQ: DB

ONE INCH
0 1"
ONE INCH AT FULL SCALE. IF NOT ONE INCH ADJUST SCALE ACCORDINGLY

REST AREA & OVERLOOK PLAN

wallis engineering
215 W 4th Street, Suite 200
Vancouver, WA 98660
360.695.7941

PROJECT NO: 1464A
DATE: 3/2019

PORT OF SKAMANIA COUNTY WATERFRONT TRAIL IMPROVEMENTS

PORT OF SKAMANIA COUNTY

DRAWING NO:
C9

P:\14\1464A Waterfront Trail\500 DWG\501 Plan Sheets\7 REST AREA AND OVERLOOK PLAN.dwg, 3/14/2019 9:57:51 AM, Chad Kays

NOTES:

1. INSTALL HABITAT BUFFER SIGNS EVERY 50' O.C. ALONG HABITAT CONSERVATION AREA BOUNDARY.
2. MOUNT SIGNS ON STEEL POSTS WITH SIGN FOUNDATIONS MEETING REQUIREMENTS OF SECTION 8-21 OF THE STANDARD SPECIFICATIONS.
3. SIGNS AND LOGS FURNISHED BY OWNER.
4. ORIENT SIGN FACE TOWARDS TRAIL OR POTENTIAL PUBLIC ACCESS POINT.
5. EMBED LOG INTO SURFACE A MINIMUM OF 6" OF LOG'S DIAMETER. WHEN SLOPE EXCEEDS 20%, SECURE LOG WITH 4' WOOD STAKES EVERY 10' ALONG ITS LENGTH.

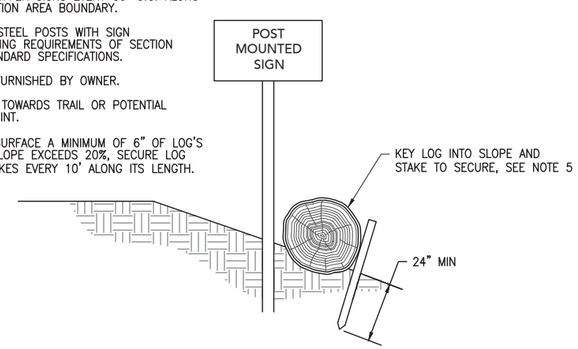

HABITAT BUFFER DEMARCATION DETAIL

NTS

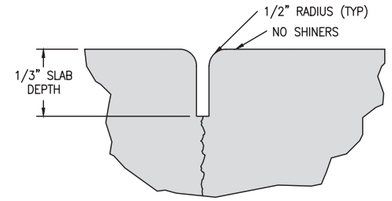

TYPICAL SCORE DETAIL

NTS

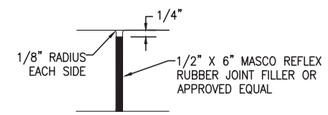

SIDEWALK EXPANSION JOINTS

NTS

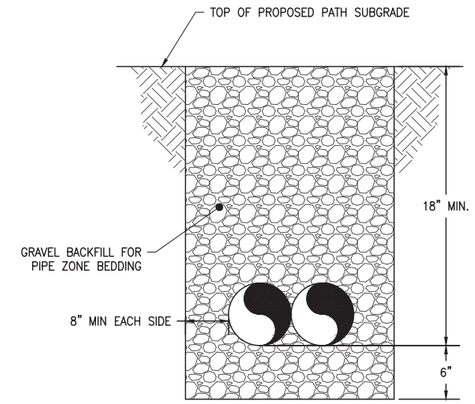

NOTES:

1. COMPACT ALL BEDDING AND BACKFILL TO 95% MAXIMUM DRY DENSITY

TYPICAL TRENCH DETAIL

NTS

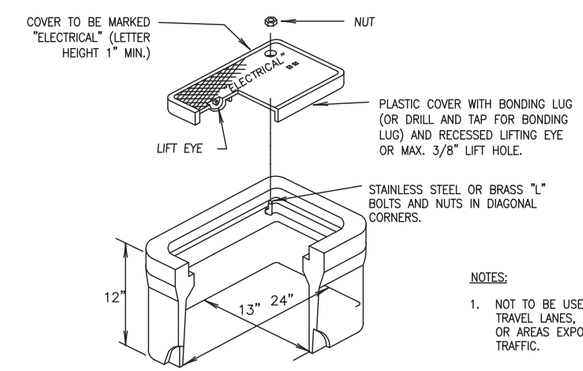

NOTES:

1. NOT TO BE USED IN TRAVEL LANES, SHOULDERS OR AREAS EXPOSED TO TRAFFIC.

POLYMER ELECTRICAL JUNCTION BOX

NTS

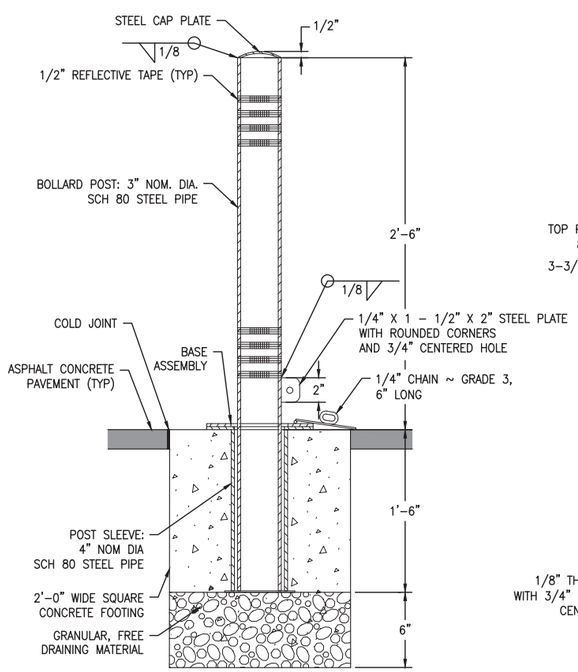

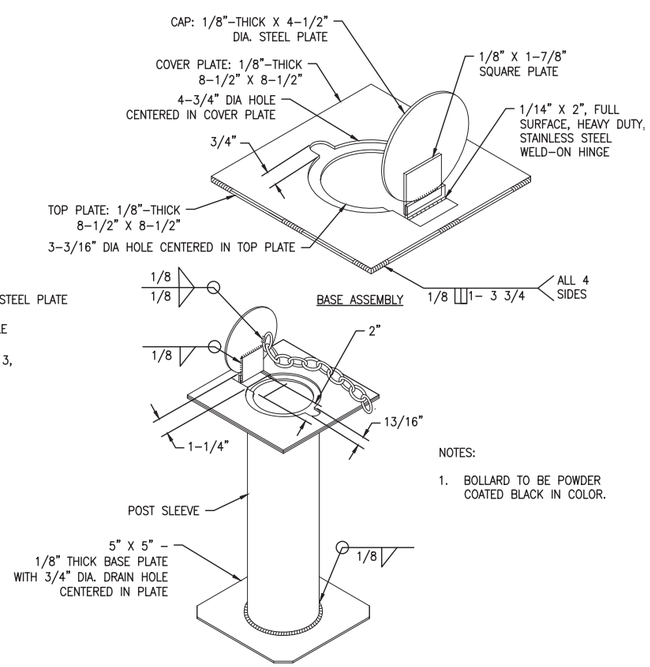

NOTES:

1. BOLLARD TO BE POWDER COATED BLACK IN COLOR.

REMOVEABLE BOLLARD DETAIL

NTS

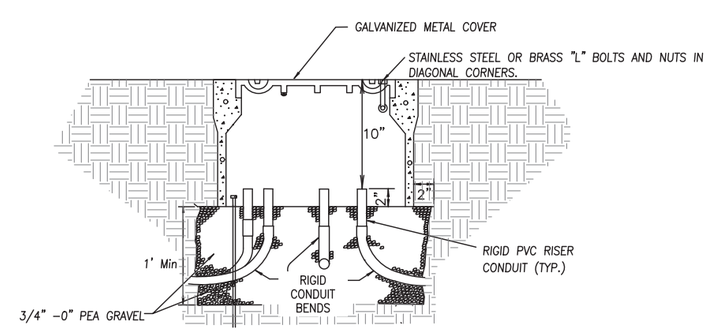

JUNCTION BOX INSTALLATION

NTS

PRELIMINARY

JANE W. VALLI, STATE OF WASHINGTON, 52600, REGISTERED PROFESSIONAL ENGINEER

NO.	REVISION	BY	DATE

DESIGNED BY: JV
DRAWN BY: CK
REQ: DB

ONE INCH 0 1"
ONE INCH AT FULL SCALE. IF NOT ONE INCH ADJUST SCALE ACCORDINGLY

DETAILS

wallis engineering
2115 W. 4th Street, Suite 300
Vancouver, WA 98660
360.693.7041

PROJECT NO: 1464A
DATE: 3/2019

PORT OF SKAMANIA COUNTY WATERFRONT TRAIL IMPROVEMENTS

PORT OF SKAMANIA COUNTY

DRAWING NO:
C10

P:\14\1464A Waterfront Trail\500 DWG\501 Plan Sheets\7 DETAILS.dwg, 3/14/2019 9:57:56 AM, Chad Kays

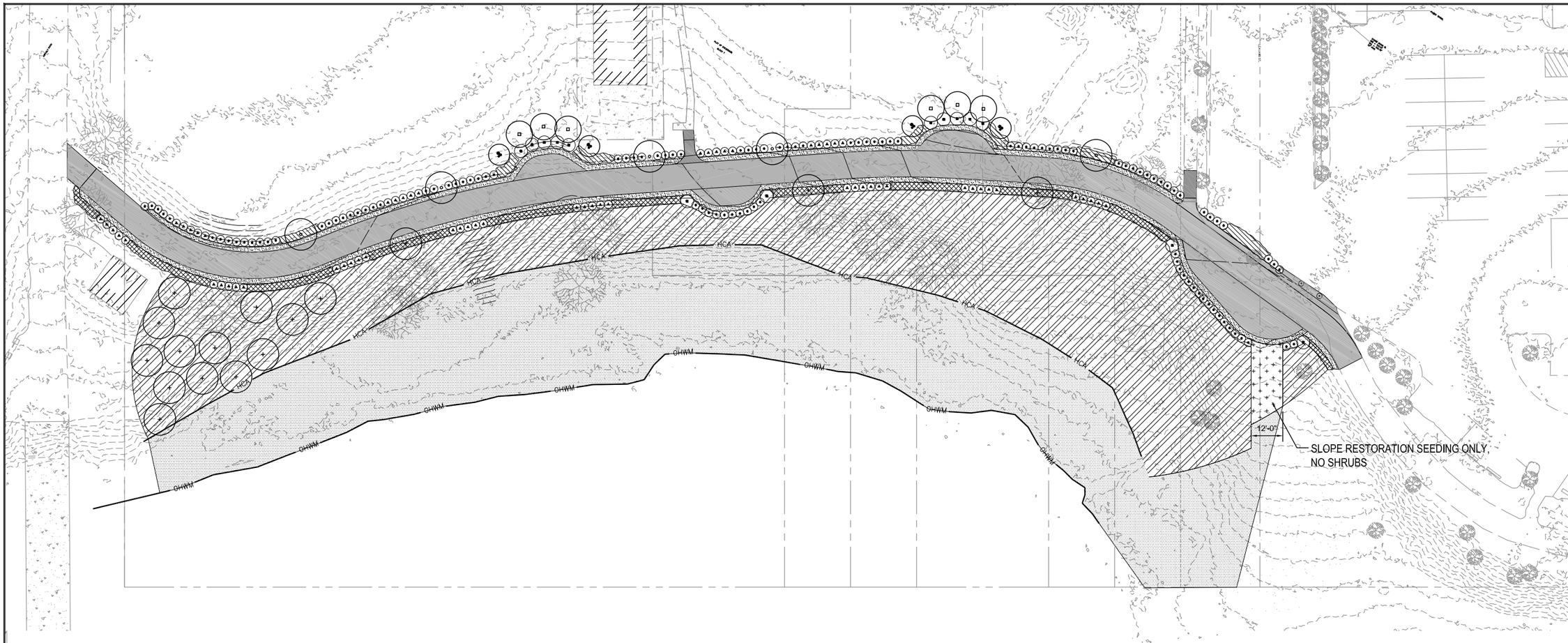

PLANT LEGEND

Existing Tree

TRAIL EDGE PLANTING AREA (3,000 sf)

BOTANICAL NAME	COMMON NAME	PLANTING NOTES	TOTAL QTY.
TREES			
Cornus nutallii	Pacific Dogwood	6'-7' cont., space as shown, Detail 1, Sheet L2	4
Corylus cornuta	Hazelnut	6'-7' cont., space as shown, Detail 1, Sheet L2	6
Rhamnus purshiana	Cascara	6'-7' cont., space as shown, Detail 1, Sheet L2	5
SHRUBS			
Mahonia repens	Creeping Oregon Grape	#1 cont., space as shown, Detail 4, Sheet L2	113
Cornus sericia 'Kelseyii'	Kelsey Dogwood	#1 cont., space as shown, Detail 4, Sheet L2	61
Rosa gymnocarpa	Baldhip Rose	#3 cont., space as shown, Detail 4, Sheet L2	14
GROUNDCOVER			
Helictotrichon sempervirens	Blue Oat Grass	#1 cont., 18" o.c., Detail 2 & 4, Sheet L2	149
Arctostaphyllos uva-ursi	Kinnikinnick	#1 cont., 3' o.c., Detail 2 & 4, Sheet L2	91

PLANTING NOTES

1. Contractor shall provide Topsoil, Soil Amendments and Mulch as specified.
2. All plants shall be installed in accordance with the Details and Specifications provided as part of the construction document package.
3. Quantities are listed for the Contractor's convenience only. All counts must be verified by the Contractor. In the case of a discrepancy between the legend and the plan, plants indicated on the plan shall supercede quantities listed in the legend.
4. Seeding shall be sown by hydro seeder per Specification Section 8-01.3(2)B.

SLOPE RESTORATION (15,170 sf)

BOTANICAL NAME	COMMON NAME	PLANTING NOTES	TOTAL QTY.
REPLACEMENT TREES			
Alnus rubra	Red Alder	6'-7' cont., space as shown, Detail 1, Sheet L2	16
SHRUBS (Detail 2 & 5, Sheet L2)			
Cornus sericea spp. sericea	Redtwig Dogwood	#3 cont., Groups of 3, 6' o.c.	42
Holodiscus discolor	Ocean Spray	#3 cont., Groups of 3, 6' o.c.	42
Physocarpus capitatus	Ninebark	#1 cont., Groups of 3 to 5, 4' o.c.	152
Ribes sanguineum	Red Flowering Currant	#1 cont., Groups of 3 to 5, 4' o.c.	152
Rosa pisocarpa	Swamp Rose	#1 cont., Groups of 3 to 5, 4' o.c.	155
Symphoricarpos albus	Snowberry	#1 cont., Groups of 3 to 5, 4' o.c.	152
Rubus parviflorus	Thimbleberry	#1 cont., Groups of 3 to 5, 4' o.c.	152
SLOPE RESTORATION SEEDING			
Bromus carinatus	California Brome	4.2 lbs./Acre, Seed throughout	1.5 lbs / PLS
Elymus glaucus	Blue Wildrye	9 lbs./Acre, Seed throughout	3.2 lbs / PLS
Eschscholzia californica	California Poppy	0.5 lbs./Acre, Seed throughout	0.2 lbs / PLS
Lupinus polyphyllos	Big Leaf Lupine	6.2 lbs./Acre, Seed throughout	2.2 lbs / PLS

RIVERBANK RESTORATION (17,254 sf)

RIVERBANK SEEDING			
Beckmannia syzigachne	American sloughgrass	8.8 lbs./Acre, Seed throughout	3.5 lbs / PLS
Glyceria occidentalis	Northwestern Mannagrass	5.4 lbs./Acre, Seed throughout	2.1 lbs / PLS
Alopecurus aequalis	Short-awn Foxtail	0.9 lbs./Acre, Seed throughout	0.3 lbs / PLS

STATE OF WASHINGTON
DAVID J ELKIN
No. 1212 EXP. 07/23/2019
LICENSED LANDSCAPE ARCHITECT

NO.	REVISION	BY	DATE

DESIGNED BY: DE
DRAWN BY: DE
REV:

ONE INCH
0 1"
ONE INCH AT FULL SCALE. IF NOT ONE INCH ADJUST SCALE ACCORDINGLY

PLANTING PLAN

JUNCUS
LANDSCAPE ARCHITECTURE
URBAN ECOLOGY
ph 503.415.0780

PROJECT NO: 1464A
DATE: 2/2019

PORT OF SKAMANIA COUNTY WATERFRONT TRAIL IMPROVEMENTS

PORT of SKAMANIA COUNTY

DRAWING NO:
L1

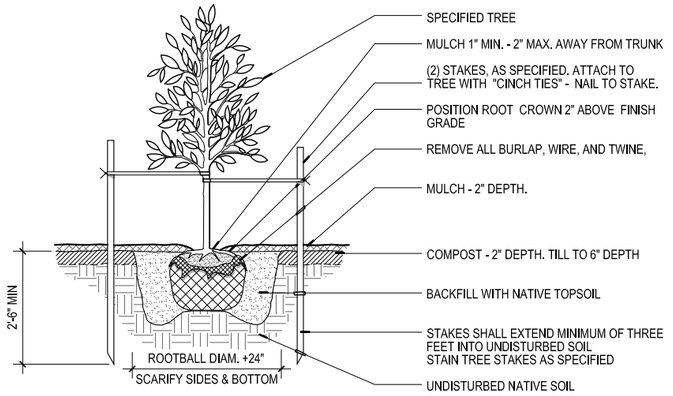

1 DECIDUOUS TREE PLANTING - STAKING

SECTION

0 6" 12" 24"

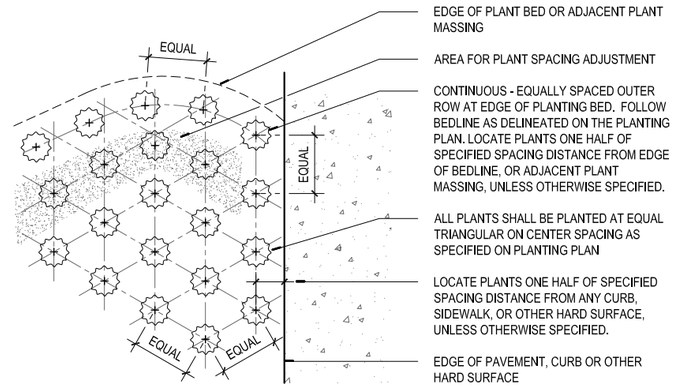

2 PLANT SPACING DIAGRAM

PLAN

NOT TO SCALE

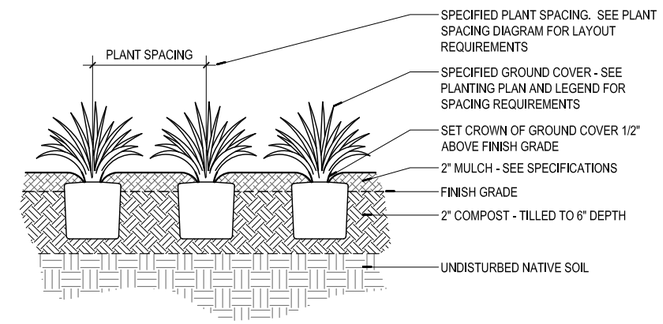

3 GROUND COVER PLANTING

SECTION

NOT TO SCALE

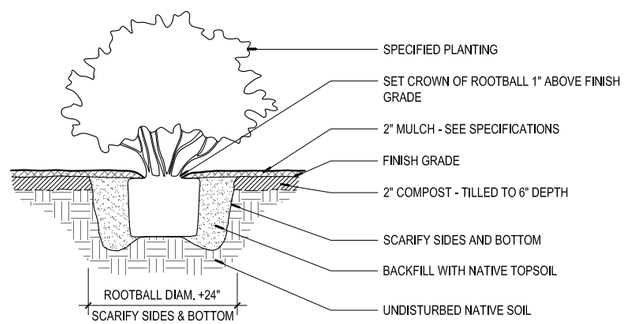

4 SHRUB PLANTING - CONTAINER

SECTION

0 6" 12" 24"

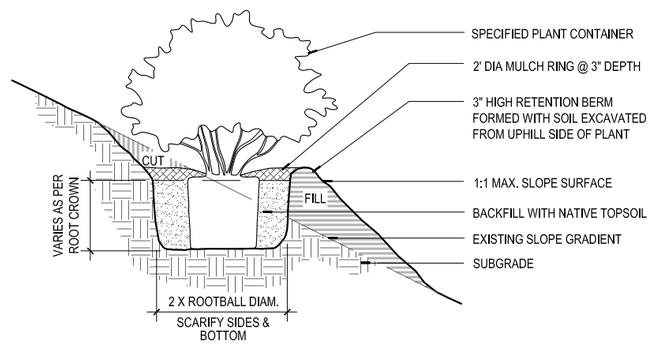

5 CONTAINER PLANTING ON SLOPES

Section

NOT TO SCALE

STATE OF WASHINGTON
DAVID J ELKIN
NO. 1212 EXP. 07/23/2019
LICENSED LANDSCAPE ARCHITECT

NO.	REVISION	BY	DATE

DESIGNED BY: DE
DRAWN BY: DE
REV:

ONE INCH 0 1"
ONE INCH AT FULL SCALE. IF NOT ONE INCH ADJUST SCALE ACCORDINGLY

PLANTING DETAILS

JUNCUS
LANDSCAPE ARCHITECTURE
URBAN ECOLOGY
ph 503.415.0760

PROJECT NO: 1464A
DATE: 2/2019

PORT OF SKAMANIA COUNTY WATERFRONT TRAIL IMPROVEMENTS

PORT of SKAMANIA COUNTY

DRAWING NO:
L2