Harry Todd Park Shoreline & Accessibility Upgrades

March 14, 2019

City of Lakewood Parks & Recreation

Doug Fraser, Capital Project Coordinator
6000 Main Street SW
Lakewood, WA 98499
Phone: (253) 983-7852

Consultant Team

Robert W. Droll
Landscape Architect, PS
4405 7TH Avenue SE, Suite #203
Lacey, WA 98503
(360) 456-3813

Construction Contact

Donald Campbell, Landscape Architect
Robert W. Droll Landscape Architect, PS
4405 7th Ave. SE, Suite 203
Lacey, WA 98503
Phone: (360) 456-3813
Cell: (253) 970-7027

Sheet Index

G1.0	Title Sheet
G1.1	Existing Conditions
L1.0	Demolition & TESC Plan
L1.1	Site Preparation and TESC Details
L2.0	Park Site Plan
L2.1	Restroom & Play Area Site & Grading Enlargement
L2.2	ADA Ramp Layout & Grading Enlargement
L2.3	Waterfront Layout & Grading Enlargement
L3.0	Waterfront Bulkhead Cross Sections
L3.1	Bulkhead Details
L3.2	Wall Details
L3.3	Site Details
L3.4	Site Details
L3.5	Site Details
L4.0	Irrigation Modification Plan
L4.1	Irrigation Details
L4.2	Topsoil, Landscape, & Seeding Plan
C1	Water Plan
C2	Sewer Plan & Profile
C3	Basin Plan
D1	Overall Site Plan
D2	Float Plan and Profile
D3	Pier Plan
D4	Pier Profile
D5	Float Details
D6	Gangway and Pier Details

Site Information

8928 N Thorne Lane SW,
Lakewood, WA 98498

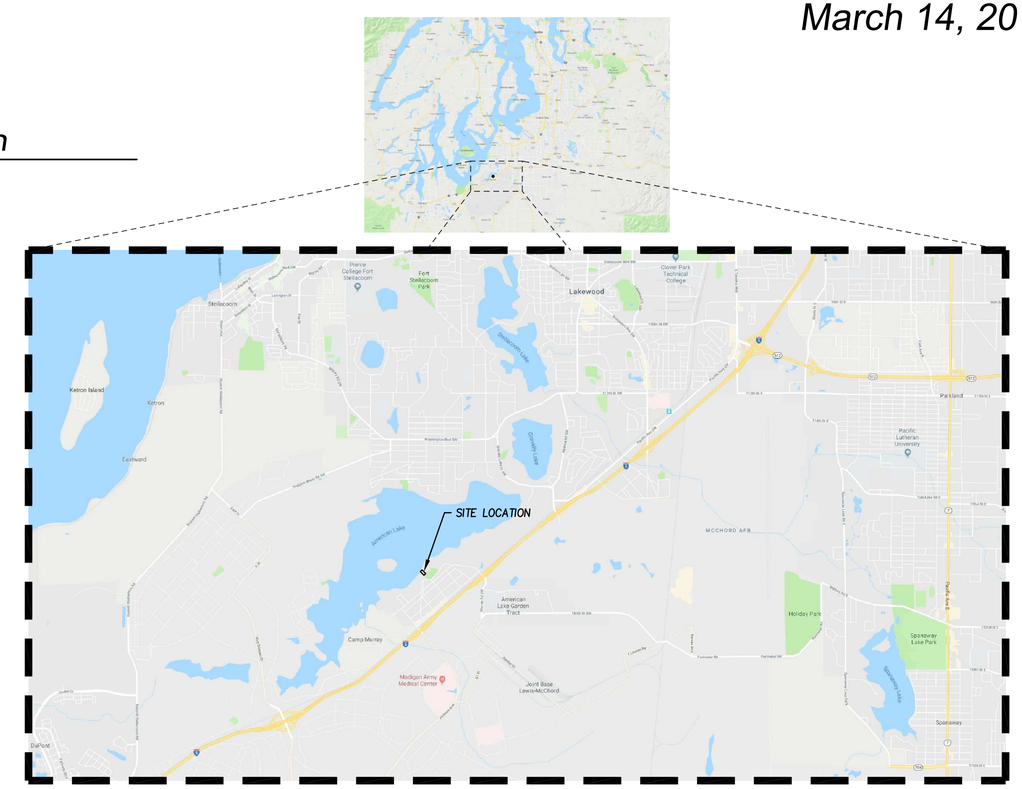

SECTION 16 – TOWNSHIP 19 – RANGE 02 – QUARTER 43

Vicinity Map

NTS

Abbreviations

ABN	ABANDON
AC	ASPHALTIC CONCRETE
ADD	ADDITIVE
ALT	ALTERNATE
ALUM	ALUMINUM
APPROX	APPROXIMATELY
A.T.	ALL–THREAD
@	AT
BC	BOTTOM OF CURB
BLKG	BLOCKING
BM	BENCH MARK
BOC	BACK OF CURB
BW	BOTTOM OF WALL
CB	CARRIAGE BOLT
CF	CUBIC FOOT
CIE	COLLECTOR INVERT ELEVATION
CL	CHAINLINK
CLR	CLEARING, CLEARANCE
CMP	CORRUGATED METAL PIPE
CO	CONTRACTING OFFICER
CONT	CONTINUOUS
CONC	CONCRETE
CORR	CORRUGATED
CPP	CORRUGATED PLASTIC PIPE
CP	CENTER POINT
CS	COUNTERSINK
CSBC	CRUSHED SURFACING BASE COURSE
CSTC	CRUSHED SURFACING TOP COURSE
CY	CUBIC YARD
DEMO	DEMOLISH
DET	DETAIL
DIA	DIAMETER
DTL	DETAIL
E	EAST
EA	EACH
EL	ELEVATION
ELEC	ELECTRICAL
EOP	EDGE OF PAVEMENT
EQ	EQUAL
EQ SP	EQUAL SPACING
EX	EXISTING
FDN	FOUNDATION
FFE	FINISH FLOOR ELEVATION
FG	FINISH GRADE
FT	FOOT, FEET
FTG	FOOTING
GA	GAUGE
GAL	GALLON
GALV	GALVANIZED
GN	FINISH GRADE – GROUND
GPM	GALLONS PER MINUTE
GW	SANDY GRAVEL
HL	HELICAL
HMA	HOT MIX ASPHALT
HP	HIGH POINT
HDPP	HIGH DENSITY POLYETHYLENE PIPE
HT	HEIGHT
HZ	HORIZONTAL
ID	INSIDE DIAMETER
I.E.	INVERT ELEVATION
IN	INCH
JT	JOINT
L	LEFT, LONG
LB	LAG BOLT
LP	LOW POINT
LS	LAG SCREW
MB	MACHINE BOLT
MAT'L	MATERIAL
MAX	MAXIMUM
MIL	1/1000th INCH
MIN	MINIMUM
MPOC	MID–POINT OF CURVE
N	NORTH
NIC	NOT IN CONTRACT
NO.	NUMBER
NOM	NOMINAL
NTS	NOT TO SCALE
OC	ON CENTER
OD	OUTSIDE DIAMETER
OR	OWNER'S REPRESENTATIVE
PC	POINT OF CURVATURE
PCC	PORTLAND CEMENT CONCRETE
PERF	PERFORATED
PERIM	PERIMETER
PI	POINT OF INTERSECTION
PLT	PLATE
PLYWD	PLYWOOD
POLY	POLYETHYLENE
PRO	PROPOSED
PSE	PUGET SOUND ENERGY
PSI	POUNDS PER SQUARE INCH
PT	POINT OF TANGENCY
PT	PRESSURE TREATED
PVC	POLYVYNYL CHLORIDE
PVC	POINT OF VERTICAL CURVATURE
PVI	POINT OF VERTICAL INTERSECTION
PVMT	PAVEMENT
PVT	POINT OF VERTICAL TANGENCY
R	RADIUS
REQ'D	REQUIRED
RP	RADIUS POINT
S	SLOPE
SCH	SCHEDULE
SEC	SECTION
SHLDR	SHOULDER
SIM	SIMILAR
SM	SILTY SAND
SP'D	SPACED
SQ	SQUARE
SS	SANITARY SEWER
STD	STANDARD
STA	STATION
STL	STEEL
SY	SQUARE YARD
TC	TOP OF CURB/CONCRETE
THK	THICK
T.O.S.	TOP OF SLAB
TW	TOP OF WALL
TYP	TYPICAL
UNO	UNLESS NOTED OTHERWISE
VC	VERTICAL CURVE
VERT	VERTICAL
WD	WIDTH
W/	WITH
W/IN	WITHIN
W/O	WITHOUT
WWM	WELDED WIRE MESH

General Notes

1. ALL CONSTRUCTION SHALL COMPLY WITH THE PROJECT MANUAL AND THE STANDARD SPECIFICATIONS FOR ROAD, BRIDGE AND MUNICIPAL CONSTRUCTION BY THE WASHINGTON STATE DEPARTMENT OF TRANSPORTATION.
2. TRAFFIC CONTROL SHALL BE PROVIDED BY CONTRACTOR.
3. DRAWINGS MAY NOT BE TO SCALE. DIMENSIONAL INFORMATION SHALL BE OBTAINED FROM WRITTEN INFORMATION ONLY. VERIFY DIMENSIONS BEFORE PROCEEDING. ANY DIMENSIONAL DEVIATION FROM THAT SHOWN WHICH MAY AFFECT INTENT OR DESIGN SHALL BE BROUGHT TO THE ATTENTION OF THE LANDSCAPE ARCHITECT. OBTAIN WRITTEN RESOLUTION PRIOR TO PROCEEDING.
4. LANDSCAPE ARCHITECT SHALL BE IMMEDIATELY NOTIFIED OF DISCREPANCIES BETWEEN DRAWINGS AND SITE CONDITIONS.

60% Review Submittal

G1.0

60% REVIEW SUBMITTAL
NOT FOR CONSTRUCTION

Harry Todd Park

Lakewood Parks & Recreation Department
Lakewood, WA

Robert W. Droll
Landscape Architect, PS

4405 7th Avenue SE, Ste. 203
Lacey, WA 98503
(360) 456-3813
FAX (360) 493-2063
E-MAIL bob@wdroll.com

Landscape Architecture
Site Planning
Environmental Design

Urban Design
Land Planning
Project Management

STATE OF WASHINGTON
ROBERT W. DROLL
LANDSCAPE ARCHITECT
EXP. 01/30/2019

PROJECT NO. 18021
DRAWING
DESIGNED BY BD
DRAWN BY BD, PM, DR
CHECKED BY BD

REVISION

DATE	CHANGE

DATE: MARCH 14, 2019

Existing Conditons

G1.1

Sheet - of -

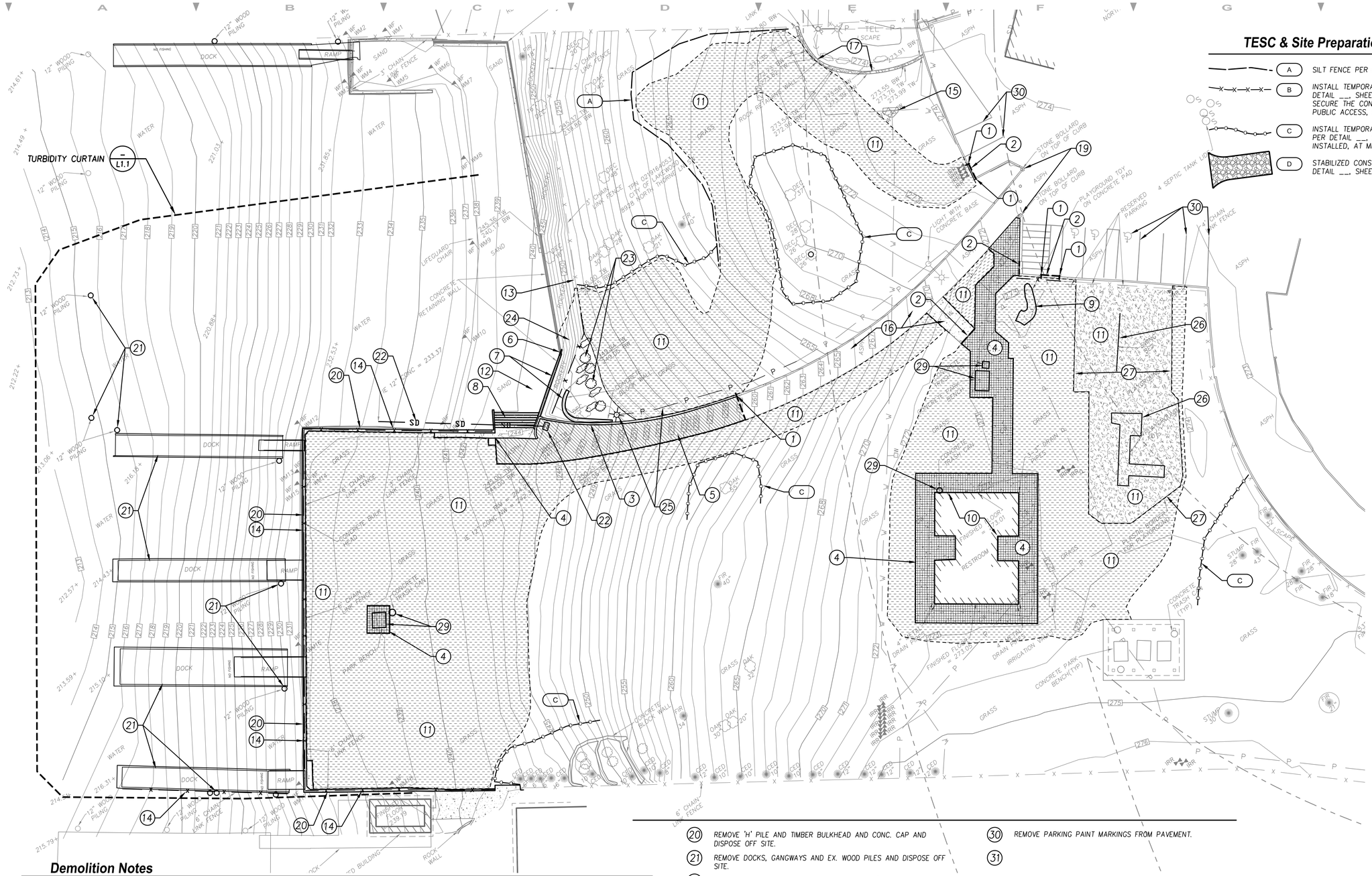

TESC & Site Preparation Legend

- (A) SILT FENCE PER DETAIL 1, SHEET L1.2
- (B) INSTALL TEMPORARY SECURITY FENCING PER DETAIL __, SHEET L1.2, AS REQUIRED TO SECURE THE CONSTRUCTION SITE AND RESTRICT PUBLIC ACCESS, COORDINATE WITH OWNER.
- (C) INSTALL TEMPORARY TREE PROTECTION FENCING PER DETAIL __, SHEET L1.2. FENCING SHALL BE INSTALLED, AT MINIMUM, OUTSIDE TREE DRIPLINE.
- (D) STABILIZED CONSTRUCTION ENTRANCE PER DETAIL __, SHEET L1.2.

Demolition Notes

1. SAWCUT EX. CURB WHERE SHOWN, REMOVE SECTION TO FULL DEPTH AND DISPOSE OFF SITE.
2. SAWCUT EX. ASPHALT OR CONCRETE PAVEMENT WHERE SHOWN, REMOVE & DISPOSE OFF SITE.
3. REMOVE CONCRETE CURB AND DISPOSE OFF SITE.
4. REMOVE CONCRETE PAVEMENT AND DISPOSE OFF SITE.
5. REMOVE ASPHALT PAVEMENT AND DISPOSE OFF SITE.
6. SAWCUT CONCRETE WALL AT ANGLE TO MATCH FACE OF PROPOSED WALL.
7. REMOVE CONCRETE OR CONCRETE BLOCK WALL TO FULL DEPTH AND DISPOSE OFF SITE.
8. DEMOLISH CONCRETE STAIRS AND DISPOSE OFF SITE.
9. REMOVE CONCRETE PLAY SCULPTURE AND DISPOSE OFF SITE.
10. DEMOLISH EXISTING RESTROOM AND STORAGE BUILDING AND DISPOSE OFF SITE.
11. GRUB AREA TO 4" DEPTH AND DISPOSE OFF SITE.
12. REMOVE EXISTING SIGN AND POST & RETAIN FOR REINSTALLATION – DISPOSE OF FOOTING OFF SITE.
13. RETAIN & PROTECT EXISTING CHAIN LINK FENCE IN PLACE.
14. REMOVE EXISTING CHAIN LINK FENCE AND DISPOSE OFF SITE.
15. RETAIN & PROTECT EXISTING VALVE BOX OR VAULT IN PLACE.
16. PROTECT EXISTING PAVEMENT FROM DAMAGE.
17. PROTECT EXISTING LANDSCAPE IMPROVEMENTS FROM DAMAGE.
18. PROTECT EXISTING SIGN IN PLACE
19. RETAIN & PROTECT EXISTING STONE BOLLARDS IN PLACE.
20. REMOVE 'H' PILE AND TIMBER BULKHEAD AND CONC. CAP AND DISPOSE OFF SITE.
21. REMOVE DOCKS, GANGWAYS AND EX. WOOD PILES AND DISPOSE OFF SITE.
22. REMOVE CATCH BASIN AND FULL LENGTH OF 12" CONC. DRAIN PIPE.
23. REMOVE SHRUBS & SMALL TREE(S), INCLUDING ROOT MASS, & DISPOSE OFF SITE.
24. REMOVE BOULDERS FROM ROCKERY AS REQUIRED TO CONSTRUCT RAMP & WALLS & DISPOSE OFF SITE.
25. REMOVE LIGHT STANDARD & ELECTRICAL SUPPLY CONDUCTOR TO LIMIT OF DISTURBANCE & DISPOSE OFF SITE. DISCONNECT CONDUCTOR AT NEXT LIGHT POLE.
26. DISMANTLE & REMOVE PLAYGROUND EQUIPMENT & PROVIDE TO OWNER. TRANSPORT EQUIPMENT TO OWNER'S STORAGE FACILITY.
27. REMOVE PLASTIC PLAY AREA BORDER WITH STAKING AND DISPOSE OFF SITE.
28. REMOVE WOOD FIBER PLAYGROUND SURFACING TO BARE SOIL AND DISPOSE OFF SITE.
29. REMOVE CONCRETE SITE FURNITURE & DISPOSE OFF SITE.
30. REMOVE PARKING PAINT MARKINGS FROM PAVEMENT.
31.

SCALE: 1"=20'

0' 10' 20' 30' 40'

811 Call 811 two business days before you dig

60% REVIEW SUBMITTAL
NOT FOR CONSTRUCTION

Harry Todd Park

Lakewood Parks & Recreation Department
Lakewood, WA

Robert W. Droll
Landscape Architect, PS

4405 7th Avenue SE, Ste. 203
Lacey, WA 98503
(360) 456-3813
FAX (360) 493-2063
E-MAIL bob@wdroll.com

Landscape Architecture
Site Planning
Environmental Design

Urban Design
Land Planning
Project Management

STATE OF WASHINGTON
ROBERT W. DROLL
NO. 538 EXP. 6/30/2018
LANDSCAPE ARCHITECT

PROJECT NO. 18021
DRAWING
DESIGNED BY BD
DRAWN BY BD, PM, DR
CHECKED BY BD

REVISION

DATE	CHANGE

DATE: MARCH 14, 2019

Demolition & TESC Plan

L1.0

Sheet - of -

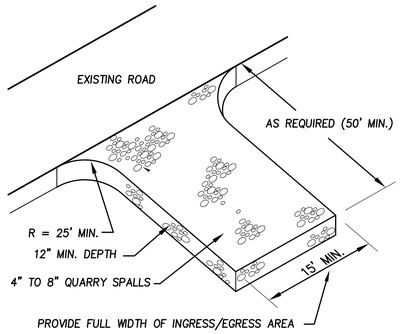

Maintenance Standards Notes:

1. CONTRACTOR IS RESPONSIBLE FOR MAINTAINING AND CLEANING THE APPROACH ON A REGULAR BASIS.
2. CONTRACTOR IS RESPONSIBLE FOR PROVIDING ADDITIONAL QUARRY SPALLS AS REQUIRED TO MAINTAIN PROPER FUNCTIONING OF THE ENTRANCE AS CONSTRUCTION PROGRESSES.
3. IF THE ENTRANCE IS NOT PREVENTING SEDIMENT FROM BEING TRACKED ONTO PAVEMENT, THEN ALTERNATIVE MEASURES TO KEEP THE STREETS FREE OF SEDIMENT SHALL BE USED. THIS MAY INCLUDE STREET SWEEPING, AN INCREASE IN THE DIMENSIONS OF THE ENTRANCE, OR THE INSTALLATION OF A WHEEL WASH. IF WASHING IS USED, IT SHALL BE DONE ON AN AREA COVERED WITH CRUSHED ROCK, AND WASH WATER SHALL DRAIN TO A SEDIMENT TRAP OR POND.
4. ANY SEDIMENT THAT IS TRACKED ONTO PAVEMENT SHALL BE REMOVED IMMEDIATELY BY SWEEPING. THE PAVEMENT SHALL NOT BE CLEANED BY WASHING DOWN THE STREET, EXCEPT WHEN SWEEPING IS INEFFECTIVE AND THERE IS A THREAT TO PUBLIC SAFETY. IF IT IS NECESSARY TO WASH THE STREETS, THE CONSTRUCTION OF A SMALL SUMP SHALL BE CONSIDERED. THE SEDIMENT WOULD THEN BE WASHED INTO THE SUMP.
5. ANY QUARRY SPALLS THAT ARE LOOSENED FROM THE PAD AND END UP ON THE ROADWAY SHALL BE REMOVED IMMEDIATELY.
6. IF VEHICLES ARE ENTERING OR EXITING THE SITE AT POINTS OTHER THAN THE CONSTRUCTION ENTRANCE, FENCING SHALL BE INSTALLED TO CONTROL TRAFFIC.

1 / L1.1 Stabilized Construction Entrance

NOT TO SCALE

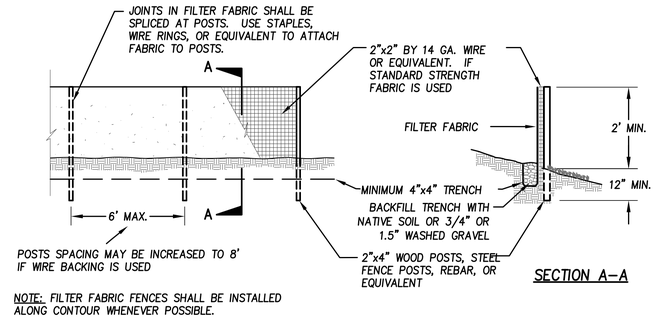

NOTE: FILTER FABRIC FENCES SHALL BE INSTALLED ALONG CONTOUR WHENEVER POSSIBLE.

Maintenance Standards Notes

1. ANY DAMAGE SHALL BE REPAIRED IMMEDIATELY.
2. IF CONCENTRATED FLOWS ARE EVIDENT UPHILL OF THE FENCE, THEY MUST BE INTERCEPTED AND CONVEYED TO A SEDIMENT TRAP OR POND.
3. IT IS IMPORTANT TO CHECK THE UPHILL SIDE OF THE FENCE FOR SIGNS OF THE FENCE CLOGGING AND ACTING AS BARRIER TO FLOW AND THEN CAUSING CHANNELIZATION OF FLOWS PARALLEL TO THE FENCE. IF THIS OCCURS, REPLACE THE FENCE AND/OR REMOVE THE TRAPPED SEDIMENT.
4. SEDIMENT MUST BE REMOVED WHEN THE SEDIMENT IS 6" HIGH.
5. IF THE FILTER FABRIC HAS DETERIORATED DUE TO ULTRAVIOLET BREAKDOWN, IT SHALL BE REPLACED.

2 / L1.1 Typical Silt Fence Installation

NOT TO SCALE

ELASTEC AmericanMarine Innovative Environmental Products

RuffWater Screen

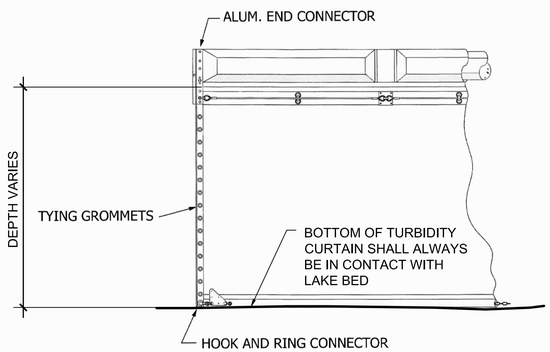

ELASTEC AmericanMarine Innovative Environmental Products

Tow Bridle With Float

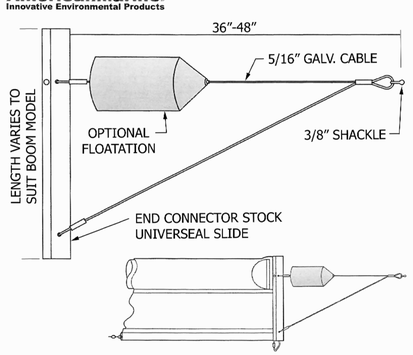

Assembled tow bridles with floats are provided for handling the containment boom or silt curtain in the water. Prior to deployment, the connector on the tow bridle should be mated to the end connector on the boom and secured with a toggle pin. The shackle on the tow bridle will accept a line up to 3/4" in diameter.

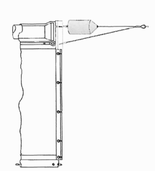

3 / L1.1 Turbidity Curtain

NOT TO SCALE

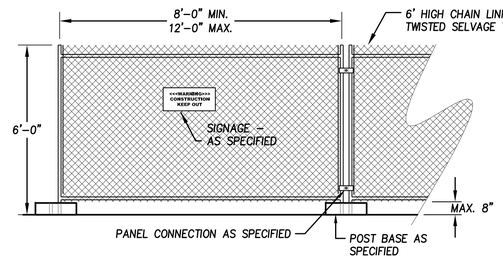

NOTES: INSTALLATION – NON–SLOPED AREAS:

1. CHAIN LINK FABRIC TO BE MIN. 11 GAUGE, GALVANIZED. NO RUSTED OR EXCESSIVELY MALFORMED FABRIC.
2. FENCE BASES SHALL BE OF SUFFICIENT WEIGHT AND/OR SPREAD TO ADEQUATELY SUPPORT EACH PANEL.
3. PANEL–TO–PANEL CONNECTIONS SHALL BE MADE AT A MINIMUM OF TWO LOCATIONS PER CONNECTION UNLESS OTHERWISE APPROVE

PROVIDE OWNER WITH SHOP DRAWINGS DESCRIBING MATERIALS & METHODS FOR SECURE, PLUMB INSTALLATIONS ON SLOPED AREAS.

PROVIDE OWNER WITH SHOP DRAWINGS DESCRIBING MATERIALS & METHODS FOR GATES/ACCESS POINTS INSTALLATIONS.

4 / L1.1 Temporary Construction Fencing

NOT TO SCALE

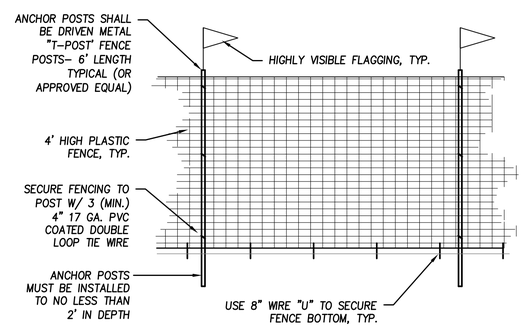

ALL TREE PROTECTION AREAS SHALL HAVE PROTECTIVE BARRIER FENCES ERECTED IN A 12' MIN. RADIUS FROM TREE TRUNK WHERE SPACE ALLOWS, OTHERWISE LOCATE AS SHOWN. THE FENCES SHALL BE HIGH–DENSITY POLYETHYLENE PLASTIC, RECTANGULAR PATTERN, AND SUPPORTED BY T–POST STEEL FENCE POSTS SPACED AT A MAXIMUM OF 8' APART. COLOR IS SAFETY ORANGE

5 / L1.1 Tree Protection Fencing

NOT TO SCALE

Harry Todd Park

Lakewood Parks & Recreation Department
Lakewood, WA

Robert W. Droll
Landscape Architect, PS

4405 7th Avenue SE, Ste. 203
Lacey, WA 98503
(360) 456–3813
FAX (360) 493–2063
E–MAIL bob@wdroll.com

Landscape Architecture
Site Planning
Environmental Design

Urban Design
Land Planning
Project Management

STATE OF WASHINGTON ROBERT W. DROLL NO. 938 EXP. 6/30/2018 LANDSCAPE ARCHITECT

PROJECT NO. 18021
DRAWING
DESIGNED BY BD
DRAWN BY BD, PM, DR
CHECKED BY BD

REVISION

DATE	CHANGE

DATE: MARCH 14, 2019

60% REVIEW SUBMITTAL
NOT FOR CONSTRUCTION

Call 811 two business days before you dig

Site Preparation & TESC Details

L1.1

Sheet - of -

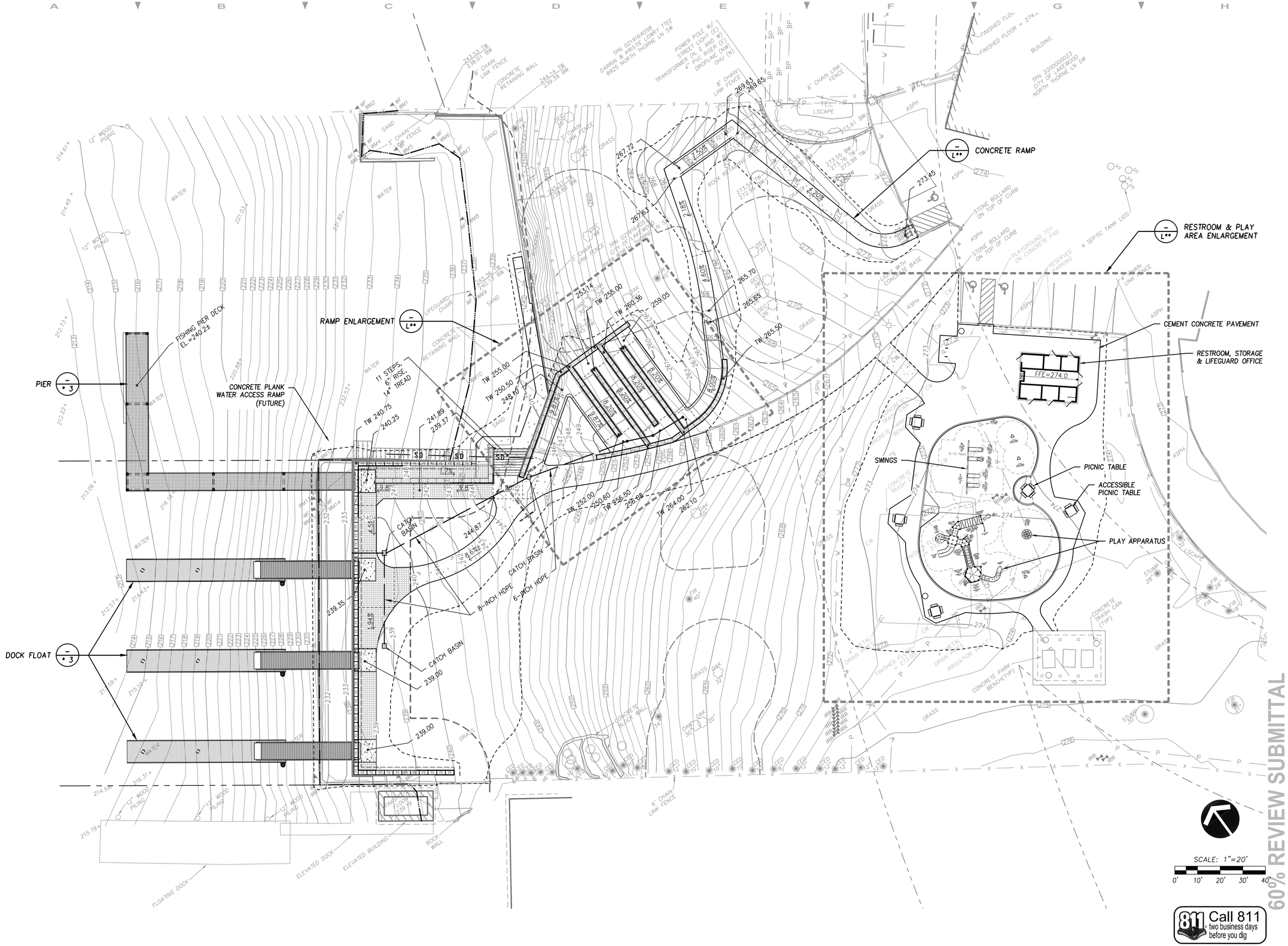

Harry Todd Park

Lakewood Parks & Recreation Department
Lakewood, WA

Robert W. Droll
Landscape Architect, PS

4405 7th Avenue SE, Ste. 203
Lacey, WA 98503
(360) 456-3813
FAX (360) 493-2063
E-MAIL bob@wdroll.com

Landscape Architecture
Site Planning
Environmental Design

Urban Design
Land Planning
Project Management

STATE OF WASHINGTON ROBERT W. DROLL RD 398 EXP. 6/30/2019 LANDSCAPE ARCHITECT

PROJECT NO. 18021
DRAWING
DESIGNED BY BD
DRAWN BY BD, PM, DR
CHECKED BY BD

REVISION

DATE	CHANGE

DATE: MARCH 14, 2019

Park Site Plan

L2.0

Sheet - of -

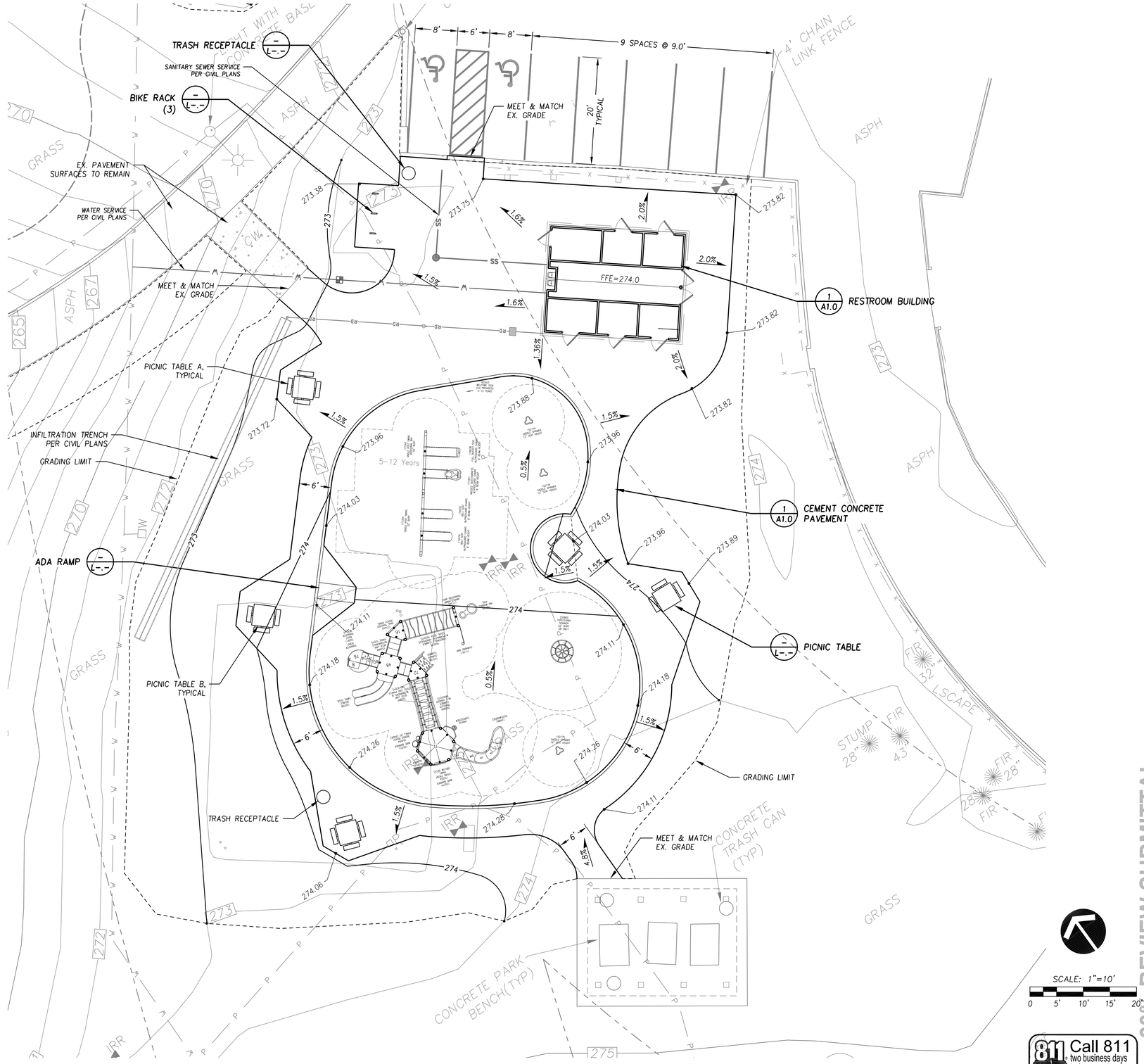

SCALE: 1"=10'

0 5' 10' 15' 20'

Call 811 two business days before you dig

60% REVIEW SUBMITTAL
NOT FOR CONSTRUCTION

Harry Todd Park

Lakewood Parks & Recreation Department
Lakewood, WA

Robert W. Droll
Landscape Architect, PS

4405 7th Avenue SE, Ste. 203
Lacey, WA 98503
(360) 456-3813
FAX (360) 493-2063
E-MAIL bob@wdroll.com

Landscape Architecture
Site Planning
Environmental Design

Urban Design
Land Planning
Project Management

STATE OF WASHINGTON
ROBERT W. DROLL
NO. 538 EXP. 6/30/2019
LANDSCAPE ARCHITECT

PROJECT NO. 18021
DRAWING
DESIGNED BY BD
DRAWN BY BD, PM, DR
CHECKED BY BD

REVISION

DATE	CHANGE

DATE: MARCH 14, 2019

Restroom & Play Area Site & Grading Enlargement

L2.1

Sheet - of -

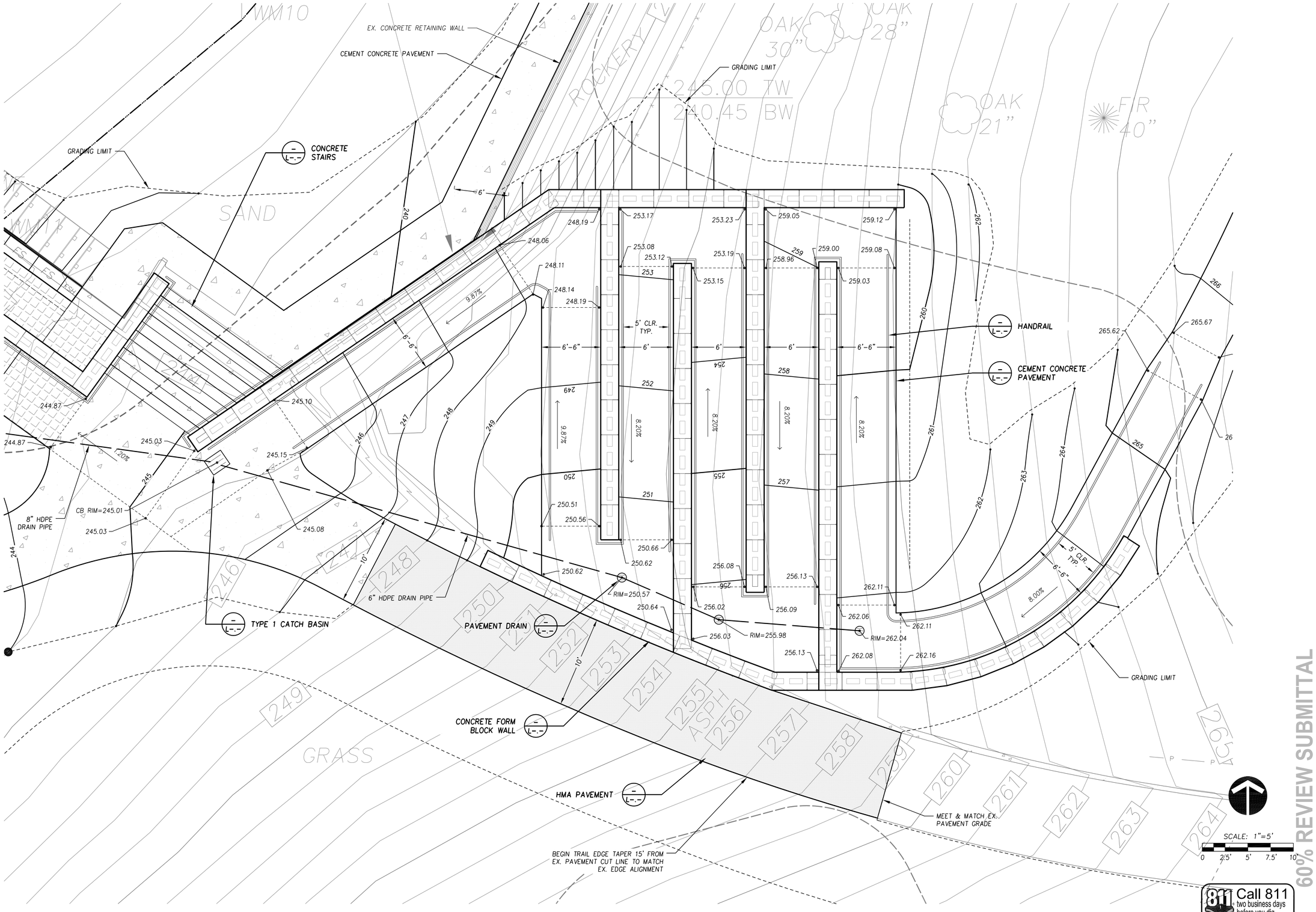

Harry Todd Park

Lakewood Parks & Recreation Department
Lakewood, WA

Robert W. Droll
Landscape Architect, PS

4405 7th Avenue SE, Ste. 203
Lacey, WA 98503
(360) 456-3813
FAX (360) 493-2063
E-MAIL bob@wdroll.com

Landscape Architecture
Site Planning
Environmental Design

Urban Design
Land Planning
Project Management

STATE OF WASHINGTON
ROBERT W. DROLL
NO. 598 EXP. 6/30/2018
LANDSCAPE ARCHITECT

PROJECT NO. 18021
DRAWING
DESIGNED BY BD
DRAWN BY BD, PM, DR
CHECKED BY BD

REVISION

DATE	CHANGE

DATE: MARCH 14, 2019

60% REVIEW SUBMITTAL
NOT FOR CONSTRUCTION

ADA Ramp Layout & Grading Enlargement

L2.2

Sheet - of -

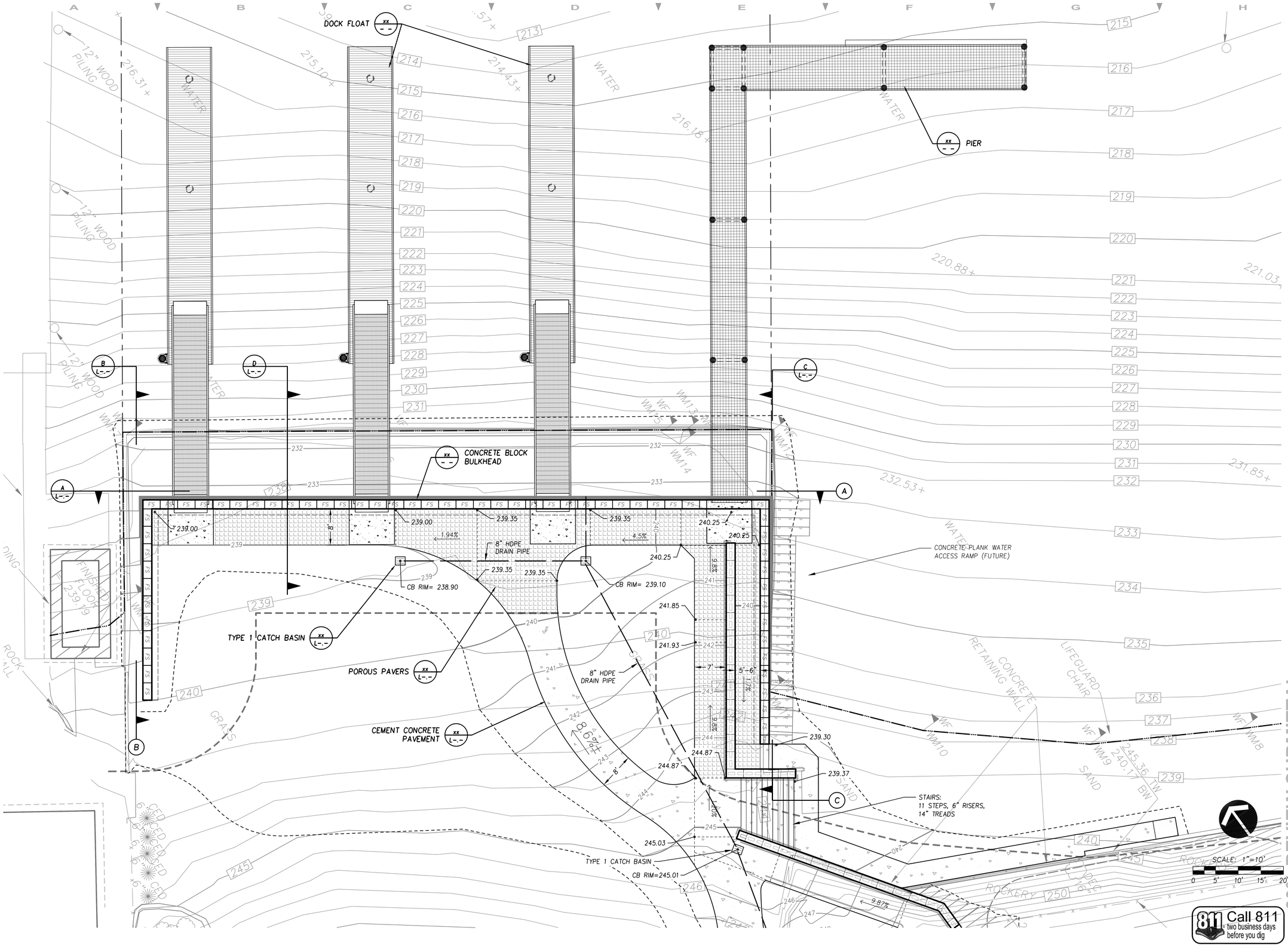

Harry Todd Park

Lakewood Parks & Recreation Department
Lakewood, WA

Robert W. Droll
Landscape Architect, PS

4405 7th Avenue SE, Ste. 203
Lacey, WA 98503
(360) 456-3813
FAX (360) 493-2063
E-MAIL bob@wdroll.com

Landscape Architecture
Site Planning
Environmental Design

Urban Design
Land Planning
Project Management

STATE OF WASHINGTON
ROBERT W. DROLL
NO. 938 EXP. 6/30/2018
LANDSCAPE ARCHITECT

PROJECT NO. 18021
DRAWING
DESIGNED BY BD
DRAWN BY BD, PM, DR
CHECKED BY BD

REVISION

DATE	CHANGE

DATE: MARCH 14, 2019

60% REVIEW SUBMITTAL
NOT FOR CONSTRUCTION

Waterfront Layout & Grading Plan

L2.3

Sheet - of -

Call 811 two business days before you dig

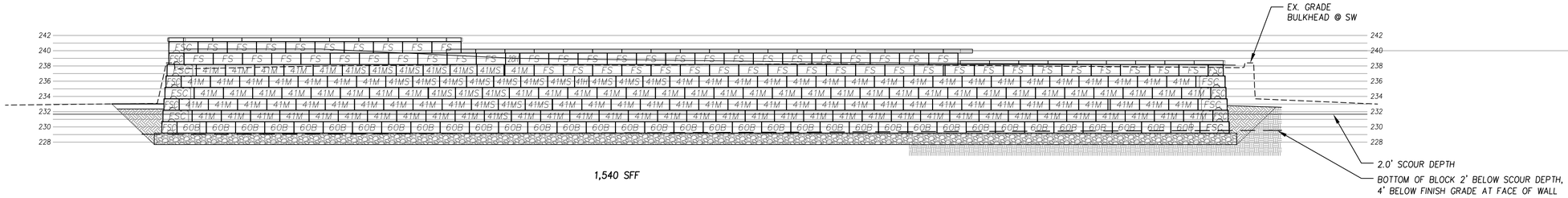

A L3.0 Bulkhead Elevation A

SCALE: 1/8"=1'-0"

B L3.0 Bulkhead Elevation B

SCALE: 1/8"=1'-0"

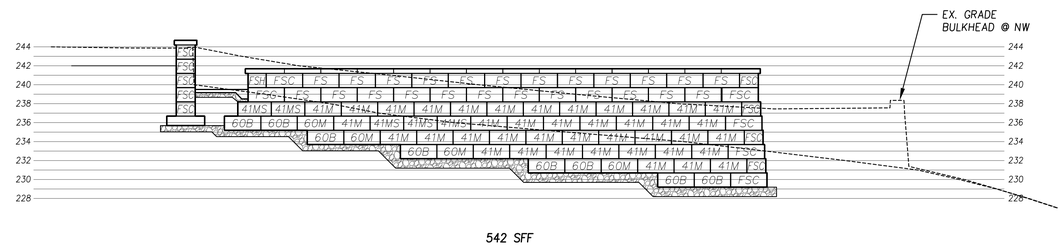

C L3.0 Bulkhead Elevation C

SCALE: 1/8"=1'-0"

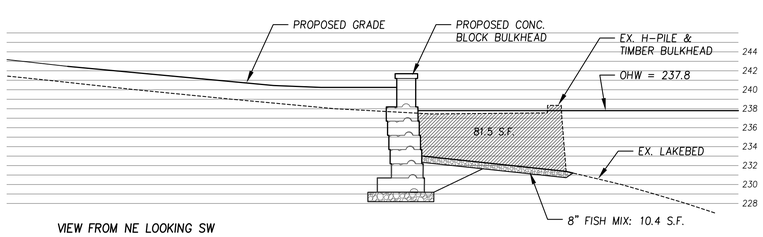

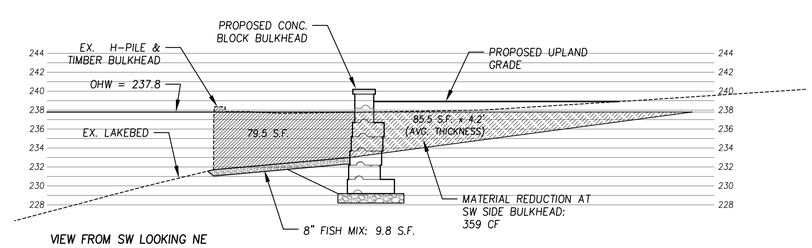

Harry Todd Park

Lakewood Parks &
Recreation Department
Lakewood, WA

Robert W. Droll
Landscape Architect, PS

4405 7th Avenue SE, Ste. 203
Lacey, WA 98503
(360) 456-3813
FAX (360) 493-2063
E-MAIL bob@wdroll.com

Landscape Architecture
Site Planning
Environmental Design

Urban Design
Land Planning
Project Management

STATE OF WASHINGTON
ROBERT W. DROLL
LS 338 EXP. 6/20/2019
LANDSCAPE ARCHITECT

PROJECT NO. 18021
DRAWING
DESIGNED BY BD
DRAWN BY BD, PM, DR
CHECKED BY BD

REVISION

DATE	CHANGE

DATE: MARCH 14, 2019

60% REVIEW SUBMITTAL
NOT FOR CONSTRUCTION

Call 811 two business days before you dig

Bulkhead Elevations and Cross Sections

L3.0

Sheet - of -

SECTION 16, TOWNSHIP 19 NORTH, RANGE 2 EAST, W.M.
PIERCE COUNTY, WASHINGTON

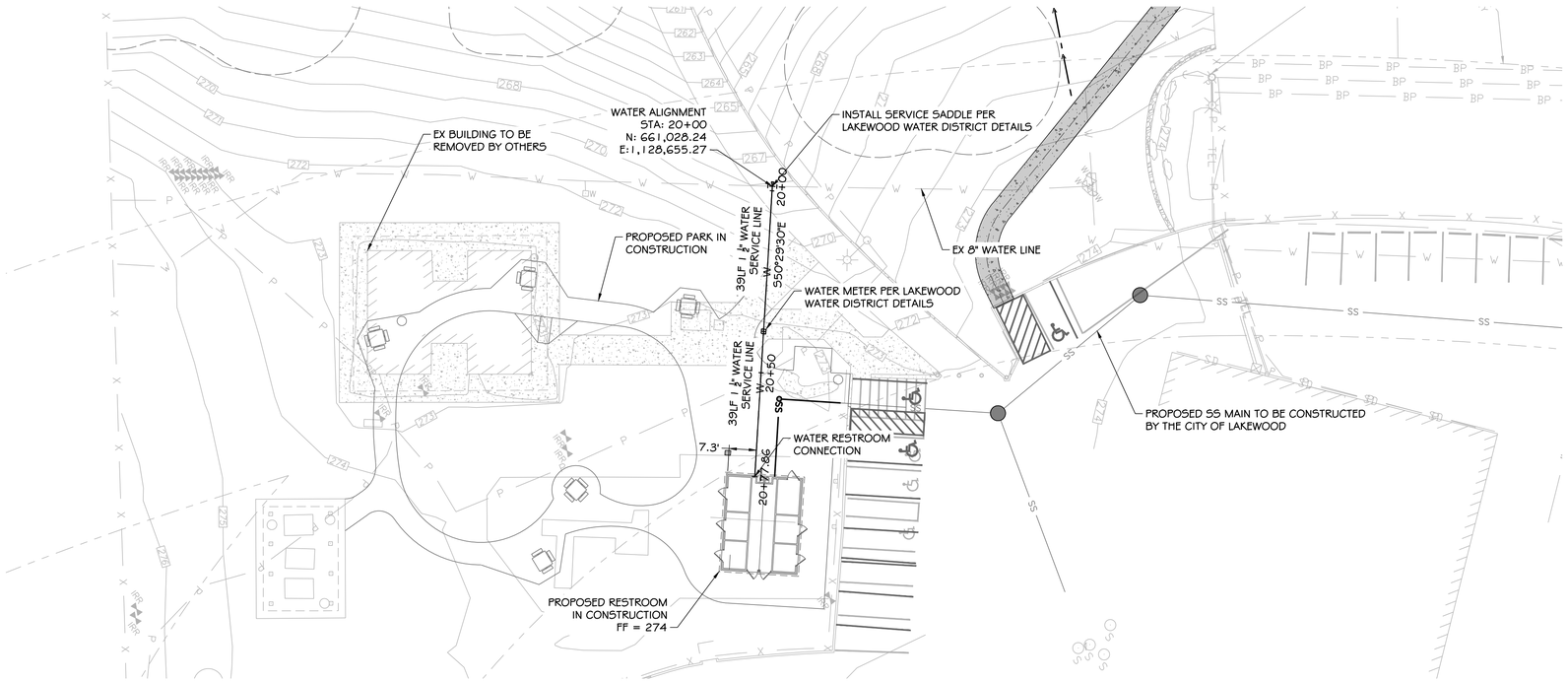

WATER PLAN VIEW
1" = 20'

0 20 40
SCALE

NOT FOR CONSTRUCTION

NO	DATE	BY	CHD	APPR	REVISION

kpff
612 Woodland Square Loop, Suite 100
Lacey, WA 98503
360.292.7230
www.kpff.com

CALL UNDERGROUND LOCATE TWO (2) WORKING DAYS BEFORE YOU DIG 811

DRAWN BY: BNT
DESIGNED BY: BNT
CHECKED BY: REH
APPROVED BY: REH
DATE: 03-13-2019
JOB NO: 101818000079

HARRY TODD PARK PHASE 2
PIERCE COUNTY PUBLIC WORKS

WATER PLAN

SCHEMATIC DRAWING

SHEET 1 OF 1

PLOTTED: Mar 13, 2019 - 14:03:3p3 PLOTTED BY: kaileyt
FILE: I:\2018\101818000079 - Harry Todd Park Waterfront Renovation\CADD\DWG\WATER PLAN SET\C11-C12 - WATER PLAN, PROFILE, DETAILS

SECTION 16, TOWNSHIP 19 NORTH, RANGE 2 EAST, W.M.
PIERCE COUNTY, WASHINGTON

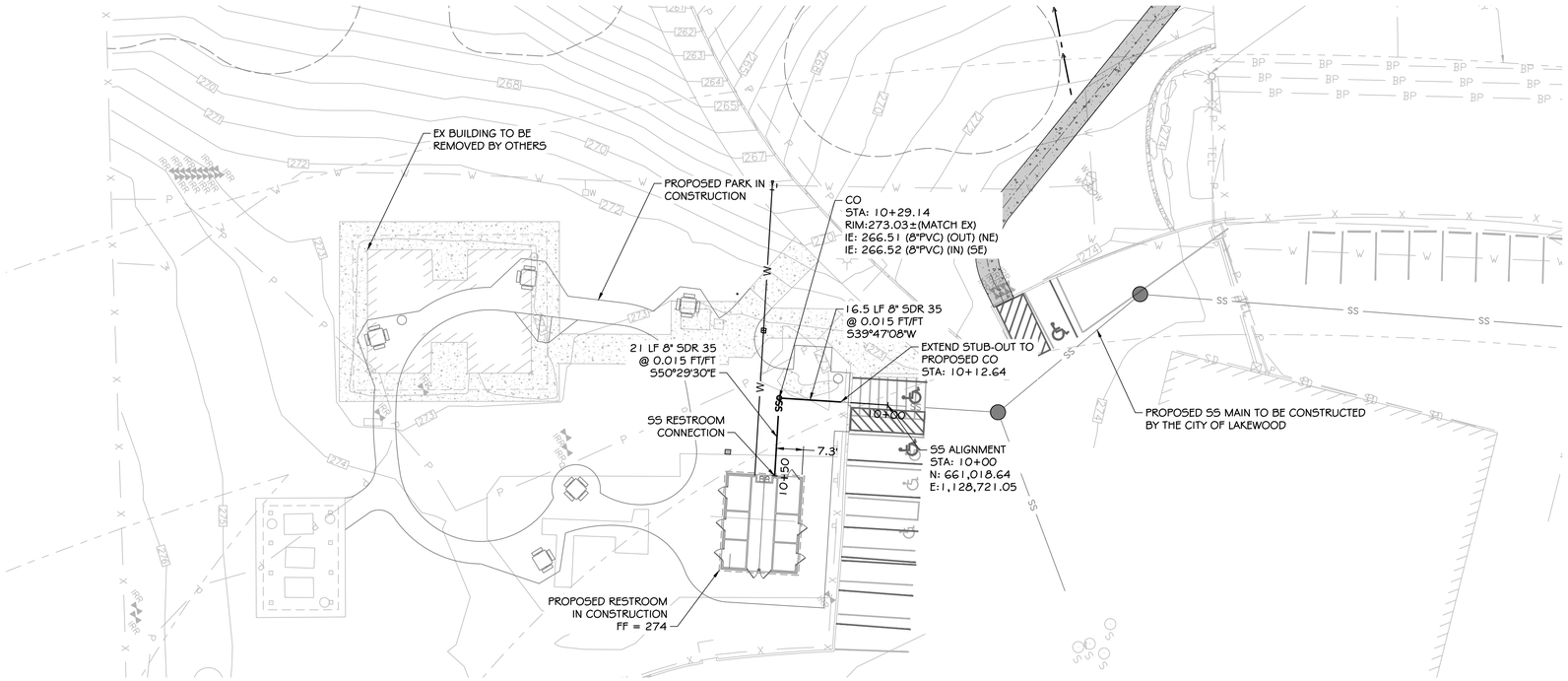

SEWER PLAN VIEW

1" = 20'

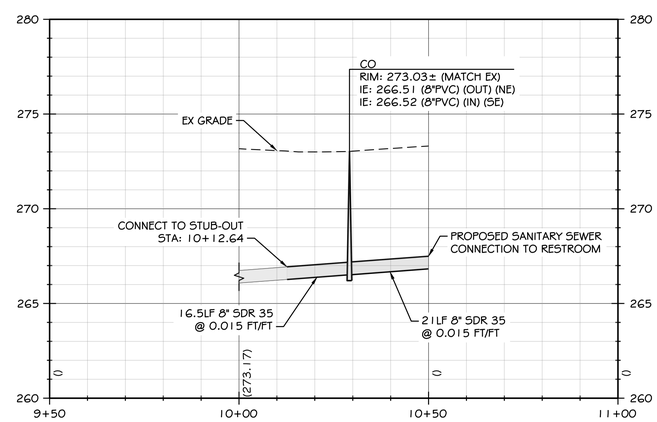

SEWER PROFILE VIEW

HORZ SCALE: 1" = 20' - VERT SCALE: 1" = 4'

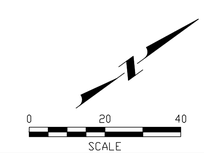

NOT FOR CONSTRUCTION

NO	DATE	BY	CHD	APPR	REVISION

kpff
612 Woodland Square Loop, Suite 100
Lacey, WA 98503
360.292.7230
www.kpff.com

CALL UNDERGROUND LOCATE TWO (2) WORKING DAYS BEFORE YOU DIG 811

DRAWN BY	DESIGNED BY	APPROVED BY	DATE
BNT	BNT	REH	03-13-2019
CHECKED BY			
REH			

JOB NO: 101818000079

HARRY TODD PARK PHASE 2
PIERCE COUNTY PUBLIC WORKS

SEWER PLAN & PROFILE

SCHEMATIC DRAWING

SHEET 1 OF 1

PLOTTED: Mar 13, 2019 - 14:03:03 PLOTTED BY: bailey1
FILE: I:\2018\1018180079 - Harry Todd Park Waterfront Renovation\CADD\DWG\SEWER PLAN SET\C11 - SEWER PLAN

SECTION 16, TOWNSHIP 19 NORTH, RANGE 2 EAST, W.M.
PIERCE COUNTY, WASHINGTON

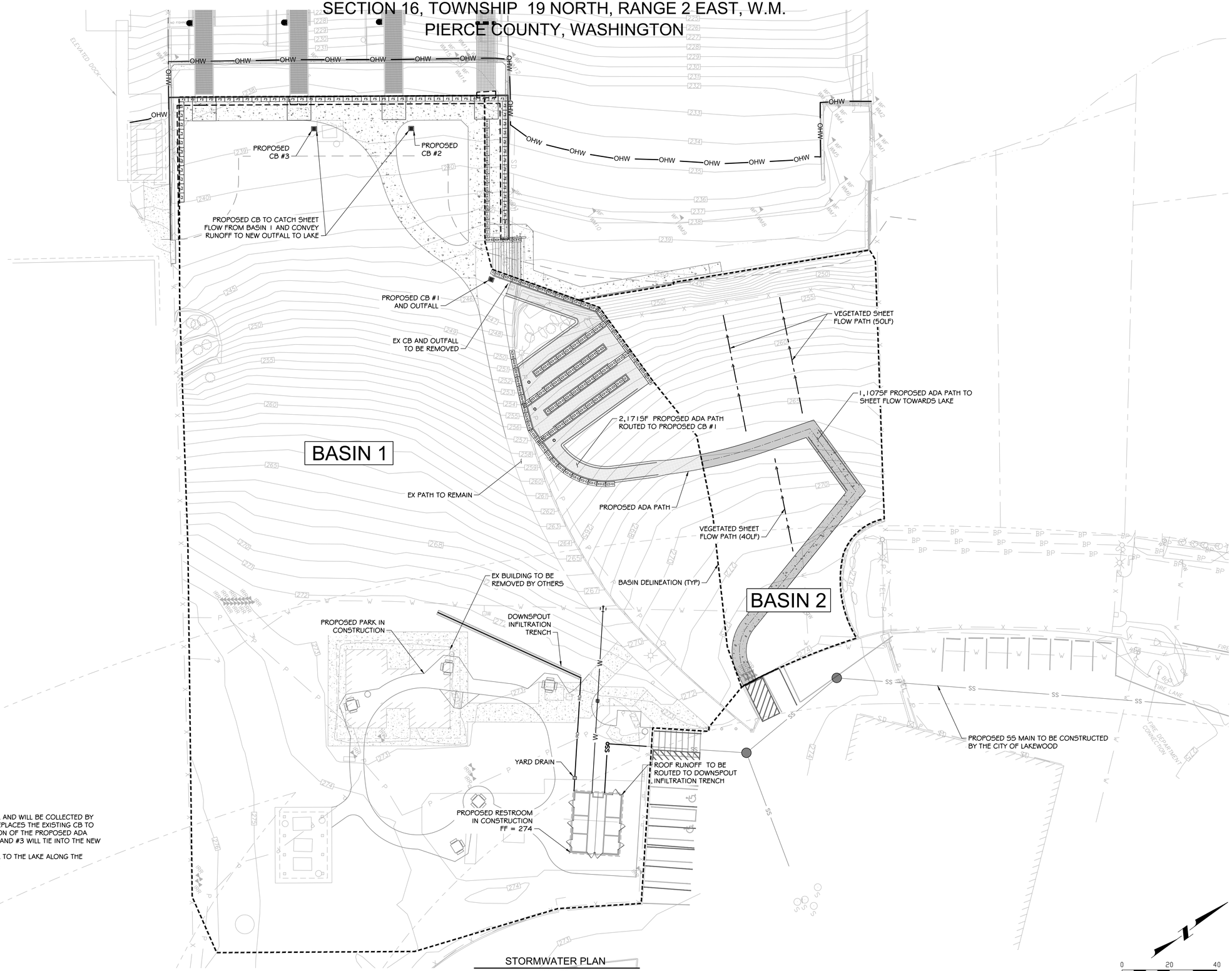

STORMWATER PLAN
1" = 20'

NOTE:
BASIN 1 SHEET FLOWS DOWNHILL AND WILL BE COLLECTED BY PROPOSED CB'S #1 - #3. CB#1 REPLACES THE EXISTING CB TO COLLECT RUNOFF FROM A PORTION OF THE PROPOSED ADA PATH AND EXISTING PATH. CB #2 AND #3 WILL TIE INTO THE NEW OUTFALL TO THE LAKE.
BASIN 2 SHEET FLOWS DOWNHILL TO THE LAKE ALONG THE EXISTING VEGETATED FLOW PATH.

NOT FOR CONSTRUCTION

NO	DATE	BY	CHD	APPR	REVISION

kpff
612 Woodland Square Loop, Suite 100
Lacey, WA 98503
360.292.7230
www.kpff.com

CALL UNDERGROUND LOCATE TWO (2) WORKING DAYS BEFORE YOU DIG 811

DRAWN BY BNT
DESIGNED BY BNT
CHECKED BY REH
APPROVED BY REH
DATE 03-13-2019
JOB NO: 101818000079

HARRY TODD PARK PHASE 2
CITY OF LAKEWOOD

BASIN PLAN

SCHEMATIC DRAWING

SHEET 1 OF 1

PLOTTED: Mar 13, 2019 - 14:25:32 PLOTTED BY: baileyt

FILE: I:\2018\101818000079 - Harry Todd Park Waterfront Renovation\CADD\DWG\STORMWATER SET\C11 - STORMWATER PLAN

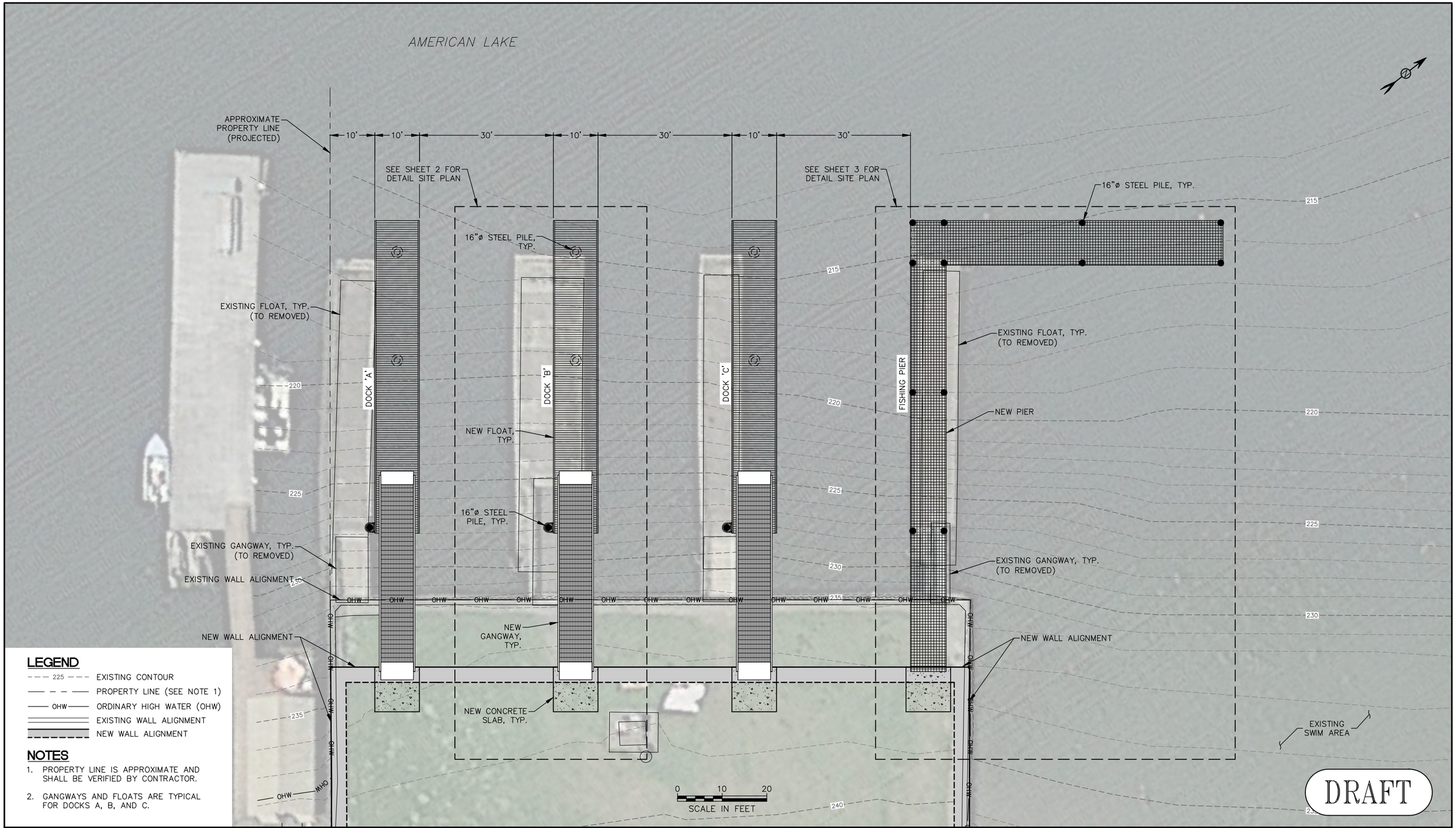

LEGEND

- 225 — EXISTING CONTOUR
- PROPERTY LINE (SEE NOTE 1)
- OHW — ORDINARY HIGH WATER (OHW)
- EXISTING WALL ALIGNMENT
- NEW WALL ALIGNMENT

NOTES

1. PROPERTY LINE IS APPROXIMATE AND SHALL BE VERIFIED BY CONTRACTOR.
2. GANGWAYS AND FLOATS ARE TYPICAL FOR DOCKS A, B, AND C.

MOTT MACDONALD

110 James Street
Suite 101
Edmonds, Washington 98020

T +1 (425) 778 6243
F +1 (425) 778 6883
W www.mottmacamericas.com

Client

Rev	Date	Drawn	Description	Ch'k'd	App'd
1	3/1/19	CNT	Permit Submittal	EDE	

Project Number	B/O	Total
398289	1	6

Designed	E. Edgecomb		Eng check	S. Phillips	
Drawn	C. Taylor		Coordination		
Dwg check	J. LaFave		Approved		
Scale at ANSI D: As Noted	Status		Rev	Security	

Drawing Number

Title

Harry Todd Park
Waterfront Renovation

Overall Site Plan

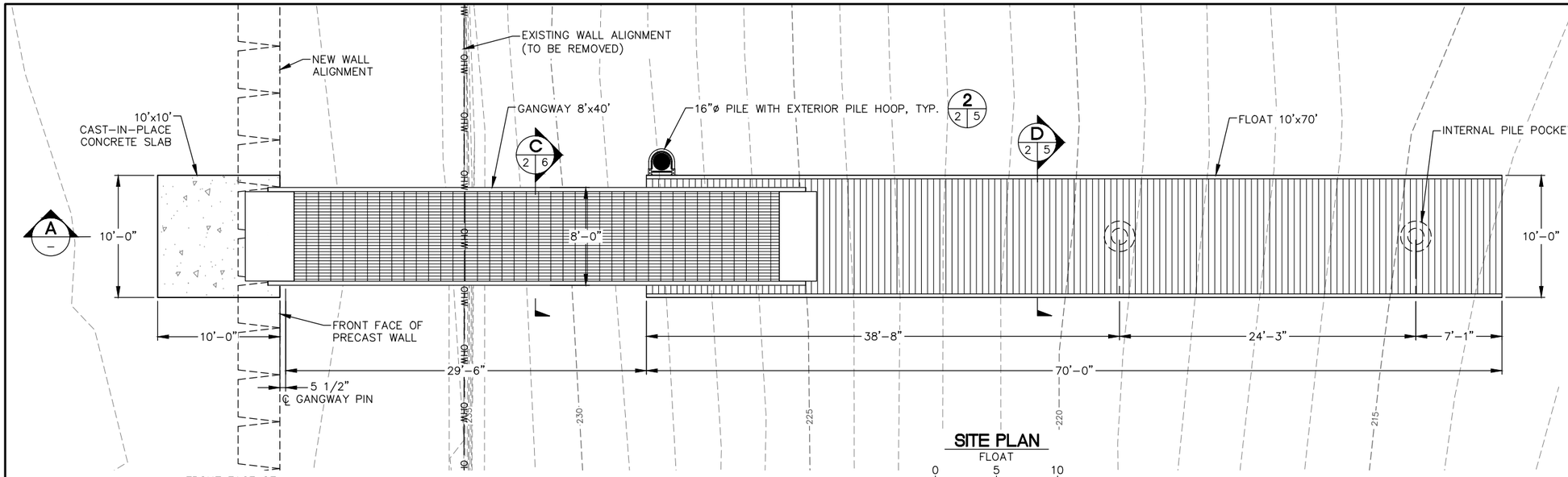

SITE PLAN

FLOAT

0 5 10

SCALE IN FEET

AMERICAN LAKE

LEGEND

225 EXISTING CONTOUR

OHW ORDINARY HIGH WATER (OHW)

NOTES

1. DETAILS FOR GANGWAY AND FLOAT ARE TYPICAL FOR DOCKS A, B, AND C.
2. FLOATING DOCK FACILITY FOR HAND CARRY VESSELS ONLY; NO MOTORIZED VESSEL MOORAGE.
3. BLOCK WALL FINISH DETAILS AND GUARDRAIL NOT SHOWN.

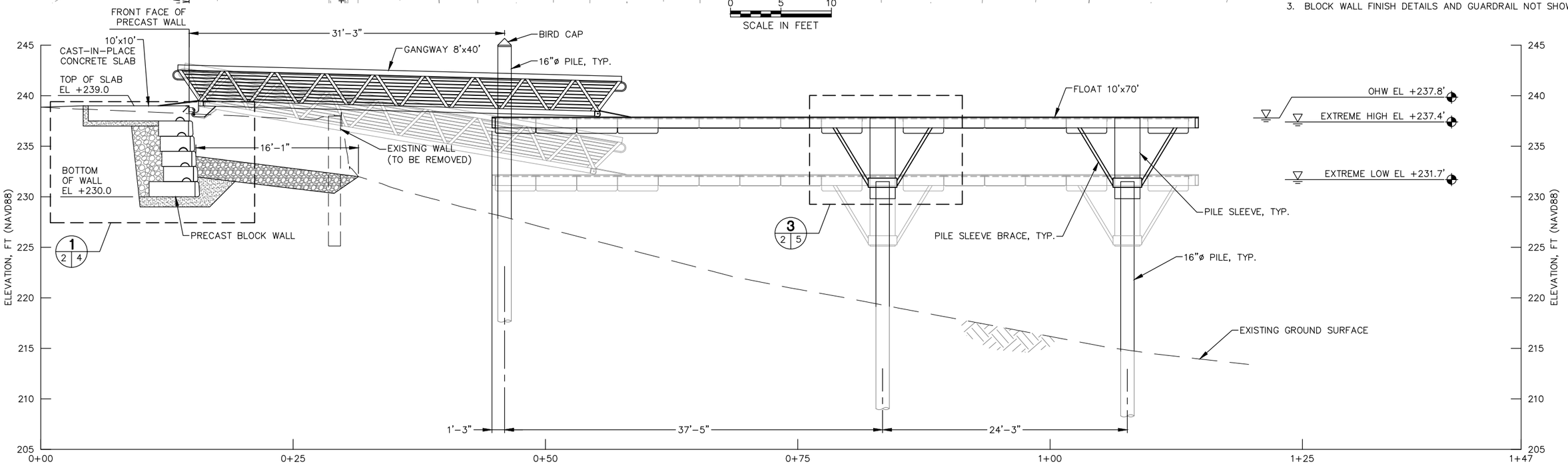

PROFILE

GANGWAY AND FLOAT

0 5 10

SCALE IN FEET

DRAFT

MOTT MACDONALD

110 James Street
Suite 101
Edmonds, Washington 98020

T +1 (425) 778 6243
F +1 (425) 778 6883
W www.mottmacamericas.com

Client

Rev	Date	Drawn	Description	Ch'k'd	App'd
1	3/1/19	CNT	Permit Submittal	EDE	

Project Number	B/O	Total
398289	2	6

Designed	E. Edgecomb		Eng check	S. Phillips	
Drawn	C. Taylor		Coordination		
Dwg check	J. LaFave		Approved		
Scale at ANSI D: As Noted	Status		Rev	Security	

Drawing Number

Title

Harry Todd Park
Waterfront Renovation

Float Plan And Profile

c:\pwworking\hmm\ports_harbors\cabryn@cadcab.com\dms39312\398289-PERMIT-site sections.dwg Mar 5, 2019 - 7:07AM cabry

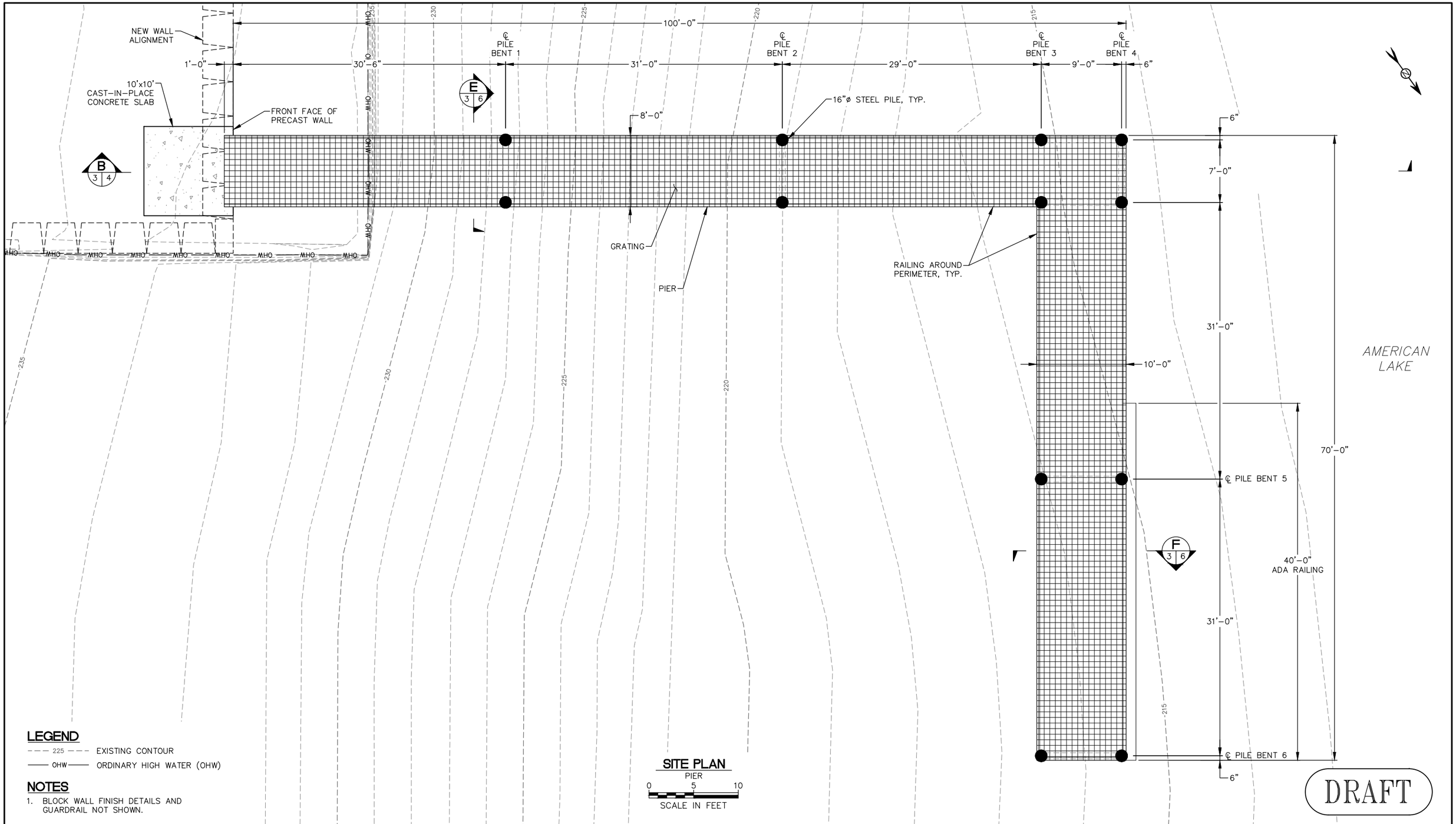

LEGEND

- - - 225 - - - EXISTING CONTOUR

—— OHW —— ORDINARY HIGH WATER (OHW)

NOTES

1. BLOCK WALL FINISH DETAILS AND GUARDRAIL NOT SHOWN.

SITE PLAN

PIER

0 5 10

SCALE IN FEET

DRAFT

MOTT MACDONALD

110 James Street
Suite 101
Edmonds, Washington 98020

T +1 (425) 778 6243
F +1 (425) 778 6883
W www.mottmacamericas.com

Client

Rev	Date	Drawn	Description	Ch'k'd	App'd
1	3/1/19	CNT	Permit Submittal	EDE	

Project Number	B/O	Total
398289	3	6

Designed	E. Edgecomb		Eng check	S. Phillips	
Drawn	C. Taylor		Coordination		
Dwg check	J. LaFave		Approved		

Scale at ANSI D	Status	Rev	Security
As Noted			

Drawing Number

Title

Harry Todd Park
Waterfront Renovation

Pier Plan

c:\pwworking\hmm\ports_harbors\cabryn@cadcab.com\dms39312\398289-PERMIT-site sections.dwg Mar 5, 2019 - 7:07AM cabry

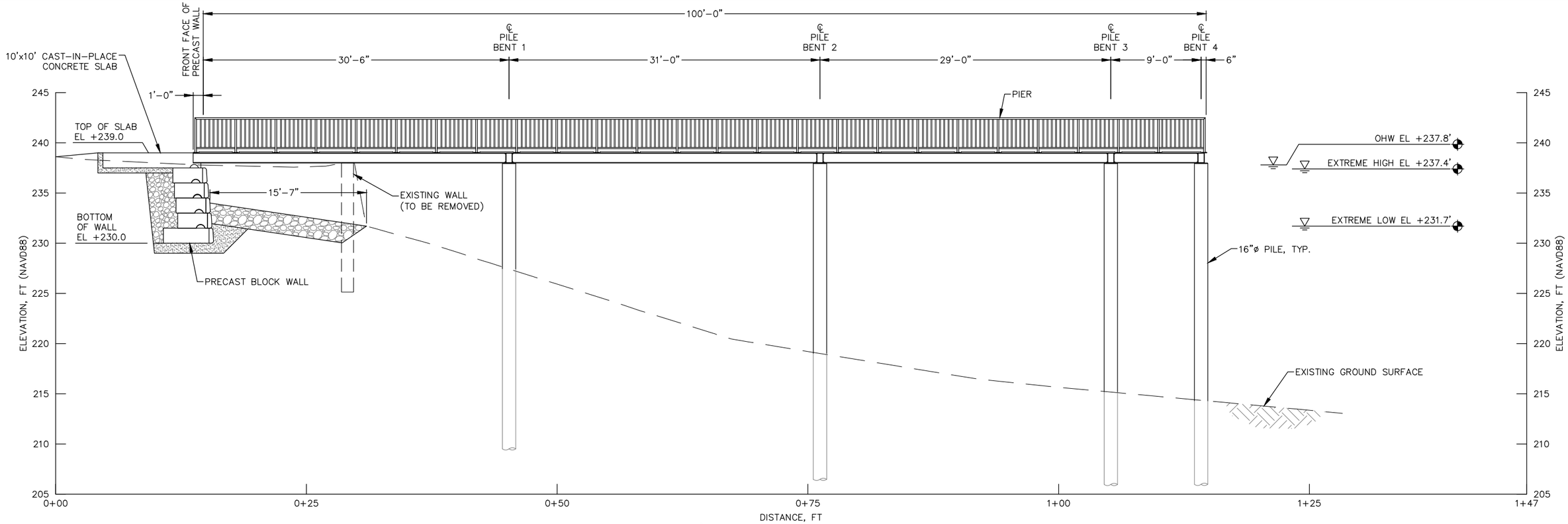

B 3 4 **PROFILE**
PIER
0 5 10
SCALE IN FEET

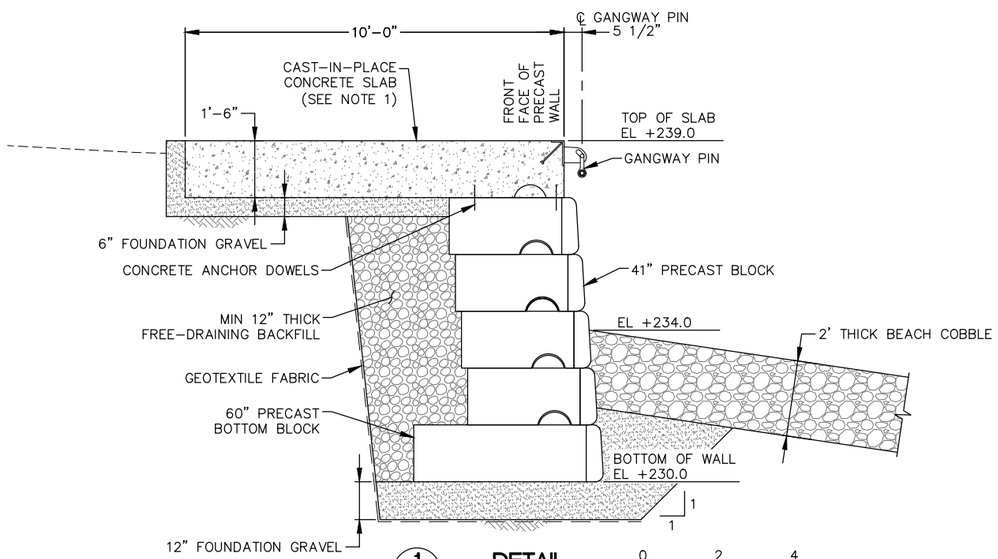

1 2 4 **DETAIL**
BLOCK WALL
0 2 4
SCALE IN FEET

NOTES

1. CAST-IN-PLACE SLAB TO INCLUDE FORM LINER TO PROVIDE SIMILAR APPEARANCE TO PRECAST BLOCK WALL UNITS.

DRAFT

MOTT MACDONALD

110 James Street
Suite 101
Edmonds, Washington 98020

T +1 (425) 778 6243
F +1 (425) 778 6883
W www.mottmacamericas.com

Client

Rev	Date	Drawn	Description	Ch'k'd	App'd
1	3/1/19	CNT	Permit Submittal	EDE	

Designed	E. Edgecomb		Eng check	S. Phillips	
Drawn	C. Taylor		Coordination		
Dwg check	J. LaFave		Approved		
Scale at ANSI D: As Noted	Status		Rev	Security	

Project Number	B/O	Total
398289	4	6

Drawing Number

Title
Harry Todd Park
Waterfront Renovation

Pier Profile

c:\pwworking\hmm\ports_harbors\cabryn@cadcab.com\dms39312\398289-PERMIT-site sections.dwg Mar 5, 2019 - 7:07AM cabry

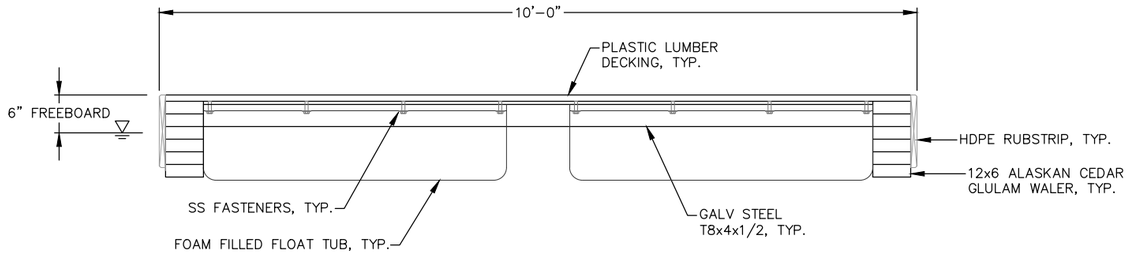

D 2 5 **SECTION**
TIMBER FLOAT OPTION
0 1 2
SCALE IN FEET

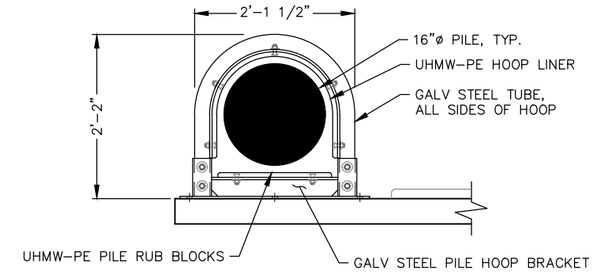

2 2 5 **DETAIL**
EXTERNAL PILE HOOP
0 1 2
SCALE IN FEET

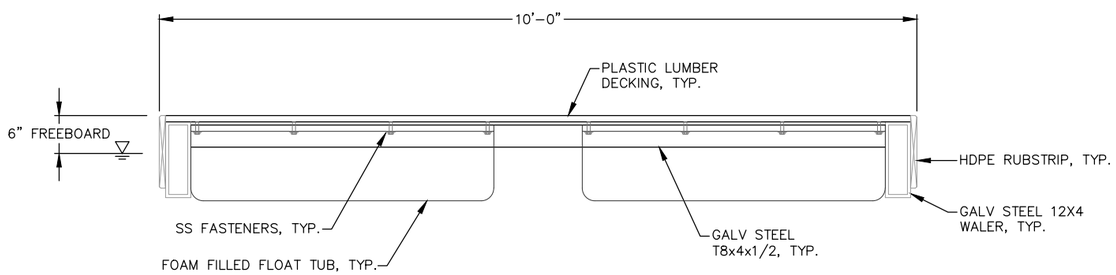

D 2 5 **SECTION**
STEEL FLOAT OPTION
0 1 2
SCALE IN FEET

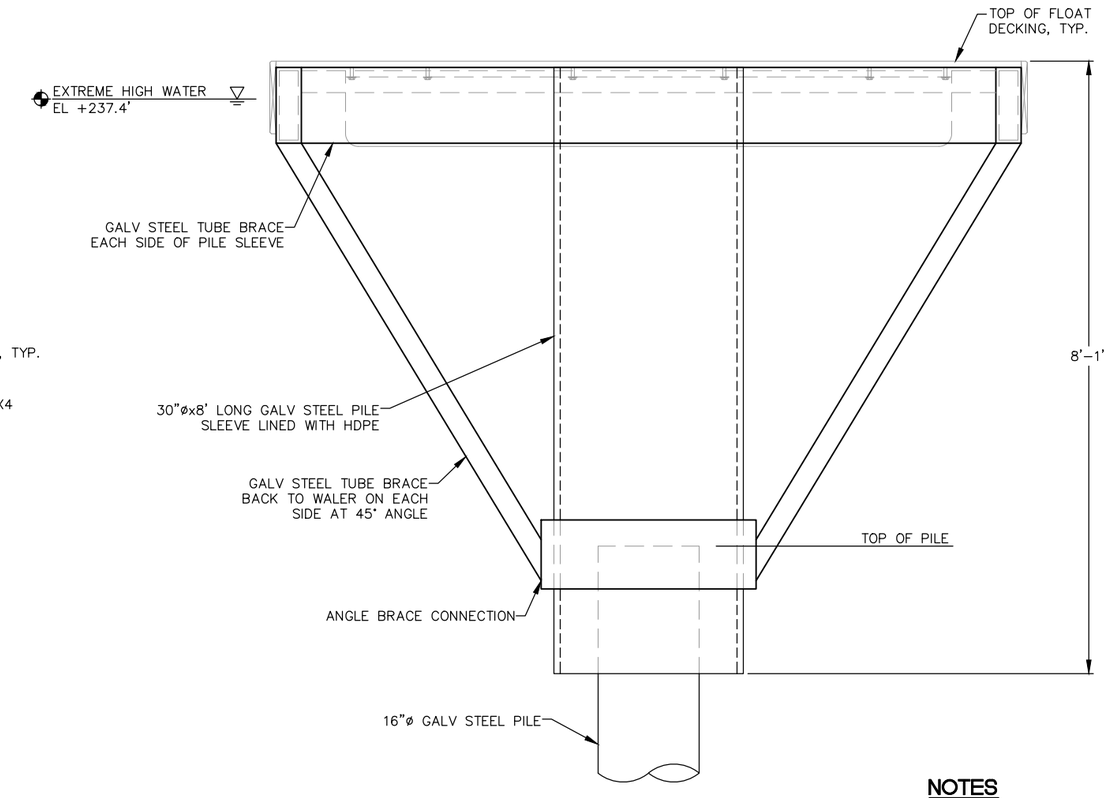

3 2 5 **DETAIL**
INTERNAL PILE POCKET
0 1 2
SCALE IN FEET

NOTES

1. DETAILS FOR GANGWAY AND FLOAT ARE TYPICAL FOR DOCKS A, B, AND C.

DRAFT

MOTT MACDONALD

110 James Street
Suite 101
Edmonds, Washington 98020

T +1 (425) 778 6243
F +1 (425) 778 6883
W www.mottmacamericas.com

Client

Rev	Date	Drawn	Description	Ch'k'd	App'd
1	3/1/19	CNT	Permit Submittal	EDE	

Project Number	B/O	Total
398289	5	6

Designed	E. Edgecomb		Eng check	S. Phillips	
Drawn	C. Taylor		Coordination		
Dwg check	J. LaFave		Approved		
Scale at ANSI D: As Noted	Status		Rev	Security	
Drawing Number					

Title
Harry Todd Park
Waterfront Renovation

Float Details

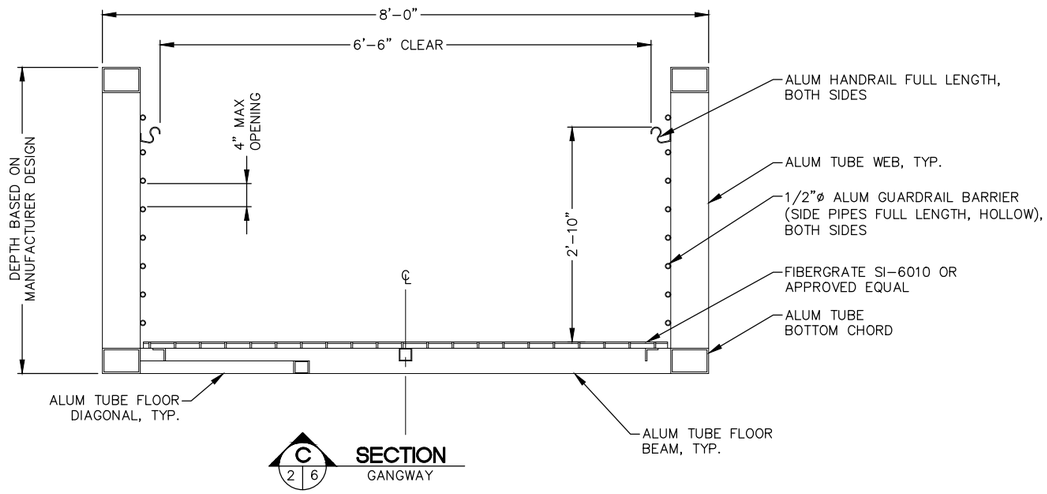

C 2 6 **SECTION**
GANGWAY

0 1 2
SCALE IN FEET

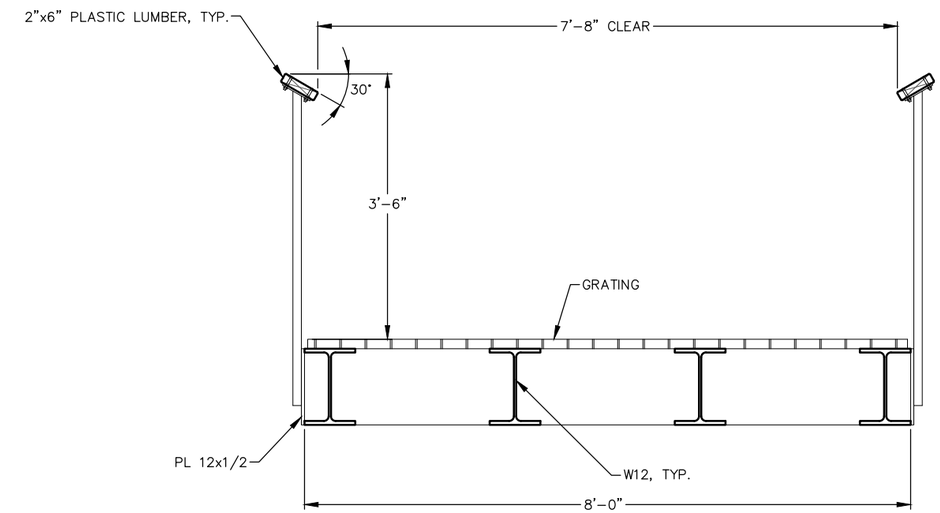

E 3 6 **SECTION**
TYPICAL PIER

0 1 2
SCALE IN FEET

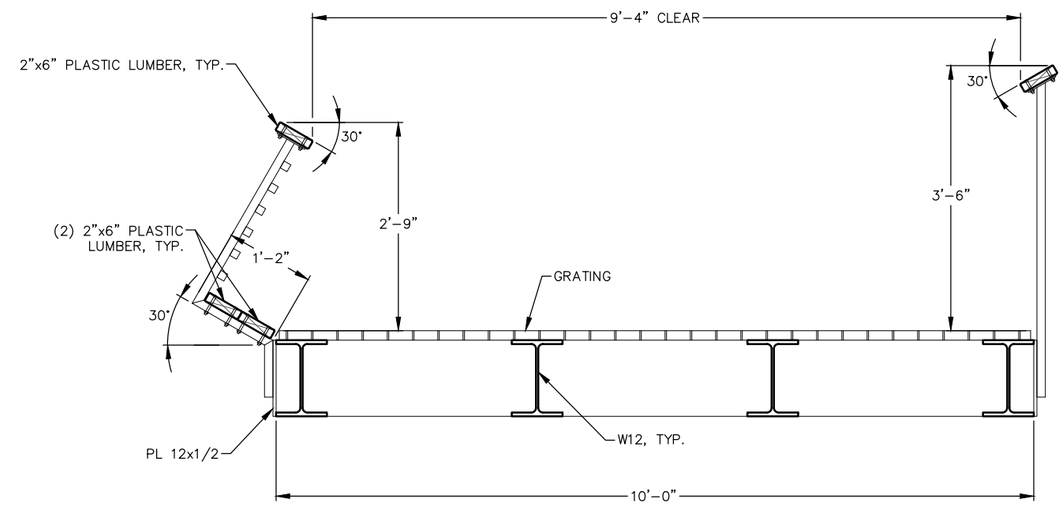

F 3 6 **SECTION**
PIER WITH ADA RAILING

0 1 2
SCALE IN FEET

DRAFT

MOTT MACDONALD

110 James Street
Suite 101
Edmonds, Washington 98020

T +1 (425) 778 6243
F +1 (425) 778 6883
W www.mottmacamericas.com

Client

Rev	Date	Drawn	Description	Ch'k'd	App'd
1	3/1/19	CNT	Permit Submittal	EDE	

Project Number	B/O	Total
398289	6	6

Designed	E. Edgecomb		Eng check	S. Phillips	
Drawn	C. Taylor		Coordination		
Dwg check	J. LaFave		Approved		
Scale at ANSI D: As Noted	Status		Rev	Security	
Drawing Number					

Title
Harry Todd Park
Waterfront Renovation

Gangway And Pier Details

c:\pwworking\hmm\ports_harbors\cabryn@cadcab.com\dms39312\398289-PERMIT-site sections.dwg Mar 5, 2019 - 7:07AM cabry