# Evergreen Playfield

**Building Permit Set**
October 28, 2020

## Mountlake Terrace Recreation and Parks Department


ATTN: Jeff Betz, Director
5303 228th St. SW
Mountlake Terrace, WA 98043
425.776.9173


## Consultant Team


**Robert W. Droll, Landscape Architect PS**
RECREATION FACILITY DESIGN
4405 7TH AVENUE SE, SUITE #203
LACEY, WA 98503
(360) 456-3813

**KPFF Consulting Engineers**
Civil Engineer
612 Woodland Square Loop SE, #100
LACEY, WA 98503
(360) 292-7230

**Kleinfelder**
Geotechnical Engineer
14710 NE 87th St. Suite 100
Redmond, WA 98502
(425) 636-7900


## Sheet Index


G1.0 Title Sheet
~~G1.1 General Notes~~
~~G2.0 Existing Conditions - Sheet 1~~
~~G2.1 Existing Conditions - Sheet 2~~
~~D1.0 Demolition and TESC Plan~~
~~D1.1 TESC Details~~
C1.0 Site Plan
~~C2.0 Grading Plan~~
~~C3.0 Drainage Plan~~
~~C3.1 Drainage Details~~
C4.0 Site Details
~~C4.1 Site Details~~
~~C4.2 Site Details~~
C5.0 Backstop Plan and Elevation
C5.1 Backstop Details
C5.2 Dugout Plan and Details
C5.3 Dugout and Backstop Details
~~C6.0 Sportsfield Layout Plan~~
~~C6.1 Sportsfield Details~~


## Project Site

22231 56th Ave W.
Mountlake Terrace, WA 98043

## Legal Description

A PORTION OF THE NE QUARTER, OF THE SW QUARTER OF SECTION 28, TOWNSHIP 27 N, RANGE 04 E, W.M, CITY OF MOUNTLAKE TERRACE, COUNTY OF SNOHOMISH, STATE OF WASHINGTON

## Parcel Information

Snohomish County Tax Parcel #: 0052000010-0200

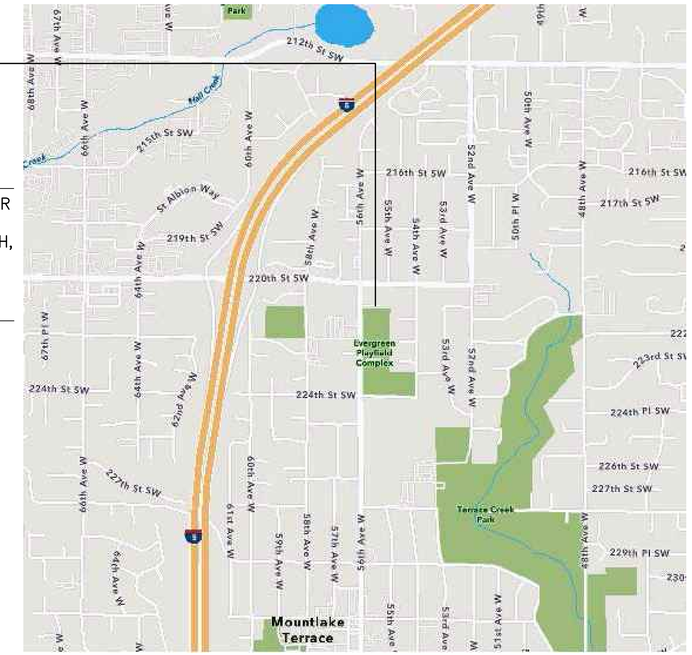


## Vicinity Map

NTS

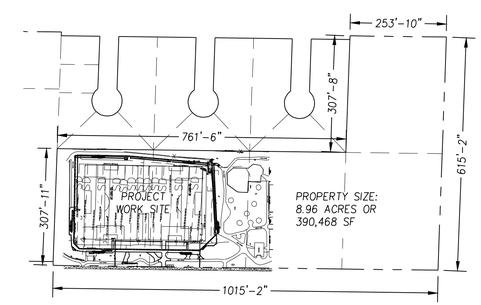


## Property Size and Dimensions

Scale: 1"=200'

## Abbreviations

| | | | | | | | |
|---|---|---|---|---|---|---|---|
| ABN | ABANDON | F&G | FRAME & GRADE | OC | ON CENTER | TOC | TOP OF CURB |
| AC | ASPHALTIC CONCRETE | FDN | FOUNDATION | OD | OUTSIDE DIAMETER | TOS | TOP OF SLAB |
| ADD | ADDITIVE | FFE | FINISH FLOOR ELEVATION | OR | OWNER'S REPRESENTATIVE | TW | TOP OF WALL |
| ALT | ALTERNATE | FG | FINISHED GRADE | PC | POINT OF CURVATURE | TYP | TYPICAL |
| ALUM | ALUMINUM | FIN GR | FINISH GRADE | PCC | PORTLAND CEMENT CONCRETE | UNO | UNLESS NOTED OTHERWISE |
| APPROX | APPROXIMATELY | FL | FLANGE | P.E. | PROFESSIONAL ENGINEER | VC | VERTICAL CURVE |
| A.T. | ALL-THREAD | FM | FORCE MAIN | PERF | PERFORATED | VERT | VERTICAL |
| @ | AT | FT | FOOT, FEET | PERIM | PERIMETER | W/ | WITH |
| BLKG | BLOCKING | FTG | FOOTING | PI | POINT OF INTERSECTION | W/IN | WITHIN |
| BM | BENCH MARK | GA | GAUGE | PLT | PLATE | W/O | WITHOUT |
| BMP | BEST MANAGEMENT PRATICES | GAL | GALLON | PLYWD | PLYWOOD | WD | WIDTH |
| BOC | BOTTOM OF CURB | GALV | GALVANIZED | POLY | POLYETHYLENE | WM | WATER MAIN |
| BW | BOTTOM OF WALL | GN | GROUND | PRO | PROPOSED | WSDOT | WASHINGTON STATE DEPARTMENT OF TRANSPORTATION |
| CB | CARRIAGE BOLT | GPM | GALS. PER MINUTE | PRV | PRESSURE REDUCING VALVE | | |
| CB | CATCH BASIN | GV | GATE VALVE | PSE | PUGET SOUND ENERGY | WWM | WELDED WIRE MESH |
| CF | CUBIC FOOT | GW | SANDY GRAVEL | PSI | POUNDS PER SQUARE INCH | | |
| CIE | COLLECTOR INVERT ELEVATION | HL | HELICAL | PT | POINT OF TANGENCY | | |
| CL | CLASS | HMA | HOT MIX ASPHALT | PT | PRESSURE TREATED | | |
| CLR | CLEARING, CLEARANCE | HP | HIGH POINT | PVC | POLYVINYL CHLORIDE | | |
| CMP | CORRUGATED METAL PIPE | HT | HEIGHT | PVC | POINT OF VERTICAL CURVATURE | | |
| CO | CLEANOUT | HZ | HORIZONTAL | PVI | POINT OF VERTICAL INTERSECTION | | |
| CO | CONTRACTING OFFICER | ID | INSIDE DIAMETER | PVMT | PAVEMENT | | |
| CONT | CONTINUOUS | I.E. | INVERT ELEVATION | PVT | POINT OF VERTICAL TANGENCY | | |
| CONC | CONCRETE | IN | INCH | R | RADIUS | | |
| CORR | CORRUGATED | INV | INVERT ELEVATION | REQ'D | REQUIRED | | |
| CP | CENTER POINT | IRR | IRRIGATION | RP | RADIUS POINT | | |
| CS | COUNTERSINK | JT | JOINT | S | SLOPE (FT/FT) | | |
| CSBC | CRUSHED SURFACING BASE COURSE | L | LEFT, LONG | S | SOUTH | | |
| CSTC | CRUSHED SURFACING TOP COURSE | LB | LAG BOLT | SCH | SCHEDULE | | |
| CY | CUBIC YARD | LF | LINEAL FOOT/FEET | SD | STORM DRAIN | | |
| DEMO | DEMOLISH | LP | LOW POINT | SEC | SECTION | | |
| DET | DETAIL | LS | LAG SCREW | SF | SQUARE FEET | | |
| DI | DUCTILE IRON | MAT'L | MATERIAL | SHLDR | SHOULDER | | |
| DIA | DIAMETER | MAX | MAXIMUM | SIM | SIMILAR | | |
| DTL | DETAIL | MB | MACHINE BOLT | SM | SILTY SAND | | |
| DWG | DRAWING | MIL | 1/1000th INCH | SP'D | SPACED | | |
| E | EAST | MIN | MINIMUM | SQ | SQUARE | | |
| EA | EACH | MJ | MECHANICAL JOINT | SS | SANITARY SEWER | | |
| EL, ELEV | ELEVATION | MPOC | MID-POINT OF CURVE | STD | STANDARD | | |
| ELEC | ELECTRICAL | N | NORTH | STA | STATION | | |
| EOP | EDGE OF PAVEMENT | NIC | NOT IN CONTRACT | STL | STEEL | | |
| EQ | EQUAL | NO. | NUMBER | SY | SQUARE YARD | | |
| EQ SP | EQUAL SPACING | NOM | NOMINAL | TC | TOP OF CONCRETE | | |
| EX, EXIST | EXISTING | NTS | NOT TO SCALE | THK | THICK | | |

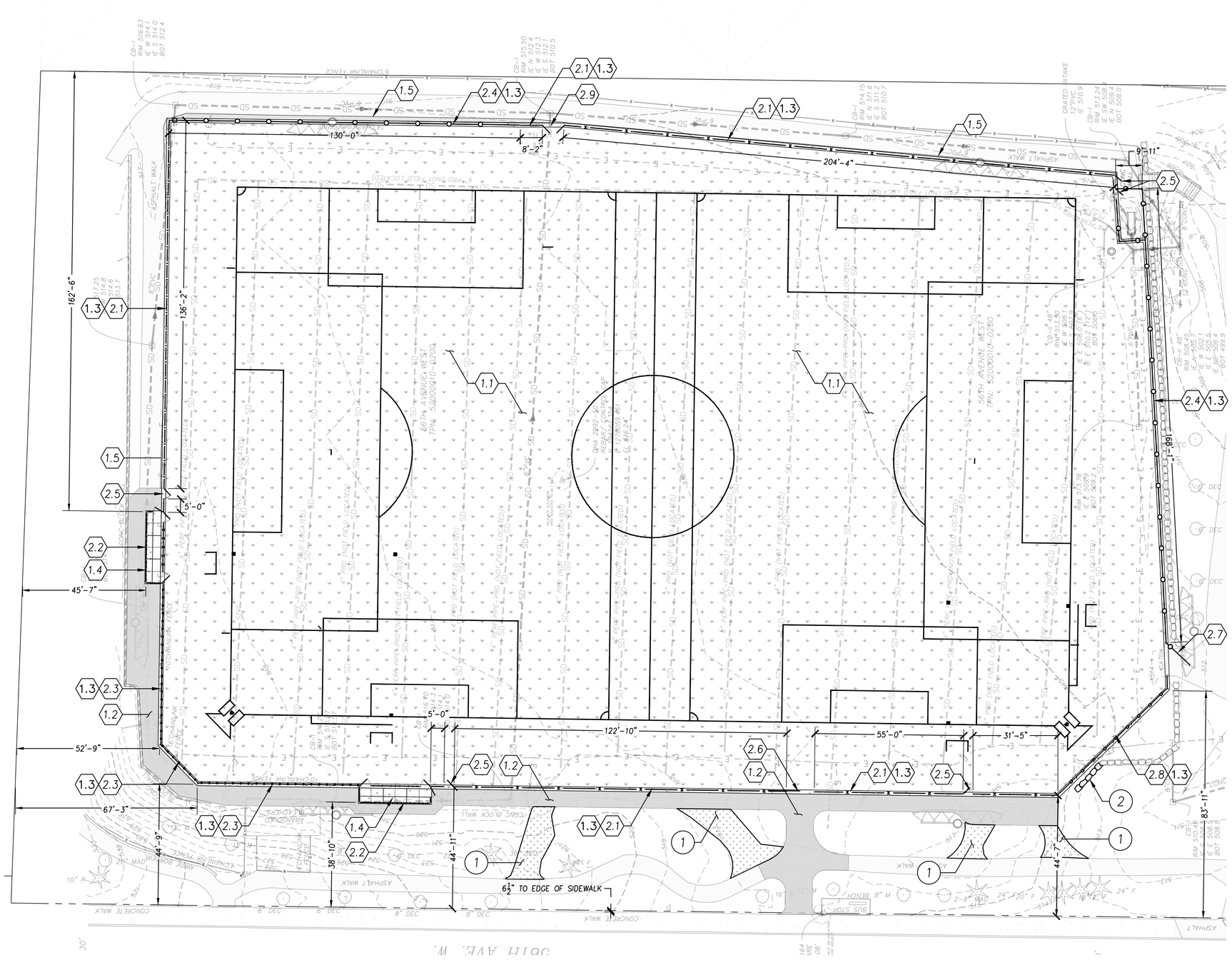


## Site Plan Detail Keynotes:

| | | Detail / Sheet |
|---|---|---|
| **1.0 Surfacing** | | |
| 1.1 | SYNTHETIC TURF | 1/C4.0 |
| 1.2 | ASPHALT PAVING | 2/C4.0 |
| 1.3 | CEMENT CONCRETE NAILER CURB | 5/C4.0 |
| 1.4 | CEMENT CONC. PAVING | 3/C4.0 |
| 1.5 | ASPHALT PATCH | 6/C4.0 |

| | | Detail / Sheet |
|---|---|---|
| **2.0 Fencing** | | |
| 2.1 | 6' CHAINLINK FENCE | 1/C4.1 |
| 2.2 | 8' CHAINLINK DUGOUT (Covered Under Bldg Permit) | C5.2, C5.3 |
| 2.3 | LITTLE LEAGUE CHAINLINK BACKSTOP (Covered Under Bldg Permit) | C5.0, C5.1 |
| 2.4 | REFURBISHED EXISTING 10' CHAINLINK FENCE (Replacing Chainlink Fabric Only) | 3/C4.1 |
| 2.5 | 3.5' WIDE 6' CHAINLINK GATE | 2/C4.1 |
| 2.6 | 12' WIDE VEHICULAR SLIDING GATE | 1/C4.2 |
| 2.7 | REFURBISHED EXISTING CHAINLINK GATE (Replacing Chainlink Fabric Only) | 3/C5.3 |
| 2.8 | TEE BALL BACKSTOP (Covered Under Bldg Permit) | 4/C5.3 |
| 2.9 | 8' WIDE DOUBLE SWING GATE | 4/C4.1 |

## Site Plan Reference Notes

| KEY | NOTE |
|---|---|
| 1 | LANDSCAPE RESTORATION AREA |
| 2 | BOULDER WALL EXTENSION, BY OTHERS, NIC |

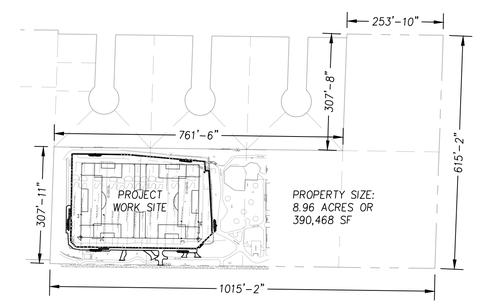


## Property Size and Dimensions

Scale: 1"=200'

SCALE: 1"=20'

0' 10' 20' 30' 40'

# Evergreen Playfield

22231 56th Ave W.
Mountlake Terrace, WA 98043


Robert W. Droll
Landscape Architect, PS

4405 7th Avenue SE, Ste. 203
Lacey, WA 98503
(360) 456-3813
FAX (360) 493-2063
E-MAIL bob@rwdroll.com

Landscape Architecture
Site Planning
Environmental Design

Urban Design
Land Planning
Project Management


STATE OF WASHINGTON
ROBERT W. DROLL
19-388 EXP. 12/09/2020
LANDSCAPE ARCHITECT

**Permit Set**

PROJECT NO. 19068
DRAWING
DESIGNED BY BD, DC, RT
DRAWN BY RT, PV
CHECKED BY BD

REVISION

| DATE | CHANGE |
|---|---|
| | |

DATE: October 28, 2020

**Site Plan**

**C1.0**

Sheet 7 of 19

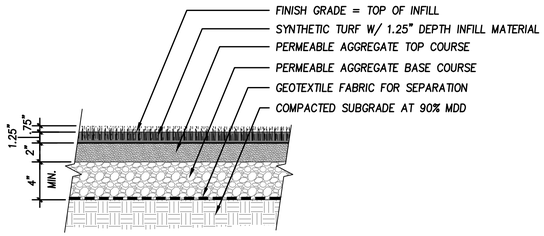


## 1 / C4.0 Synthetic Turf

SCALE: 1½"=1'

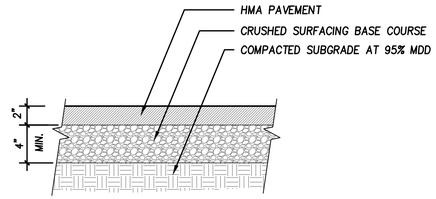


## 2 / C4.0 Asphalt Paving

SCALE: 1½"=1'

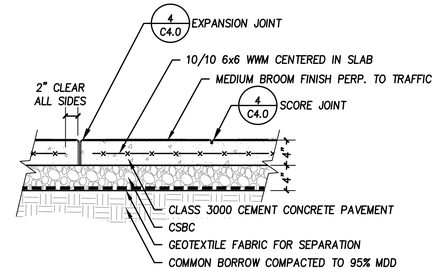


## 3 / C4.0 Cement Concrete Paving

SCALE: 1½"=1'

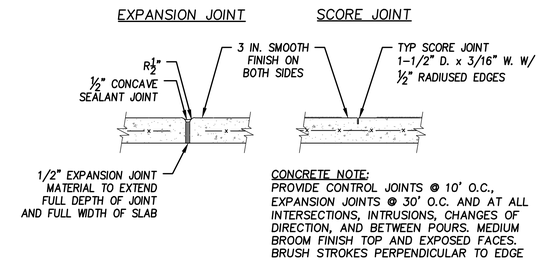


## 4 / C4.0 Expansion Joint / Score Joint

SCALE: 1½"=1'

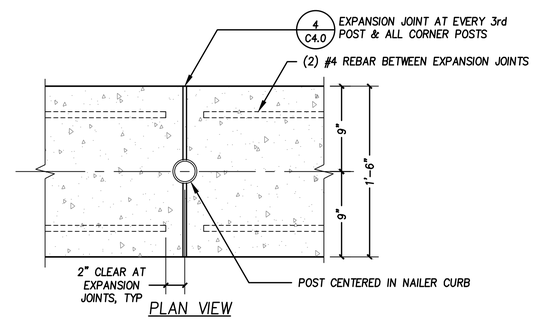


PLAN VIEW

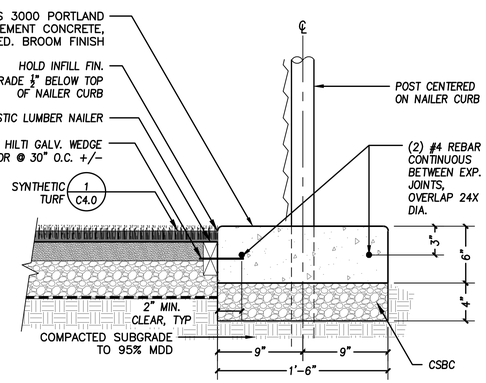


CROSS SECTION

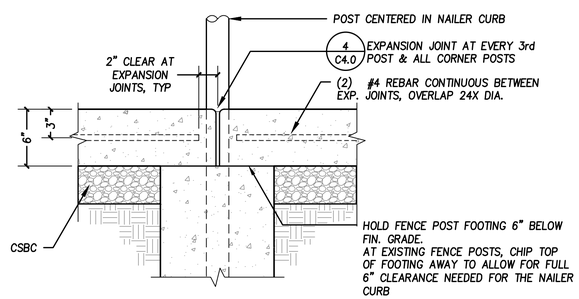


SECTION AT FENCE POST

NOTES:

1. POST FOOTING NOT SHOWN FOR CONVENIENCE. INSTALL ALL POSTS AND FOOTINGS AS PER DETAILS.
2. PROVIDE SCORE JOINTS AT EACH POST LOCATED BETWEEN EXPANSION JOINTS

## 5 / C4.0 Cement Conc. Nailer Curb

SCALE: 1½"=1'

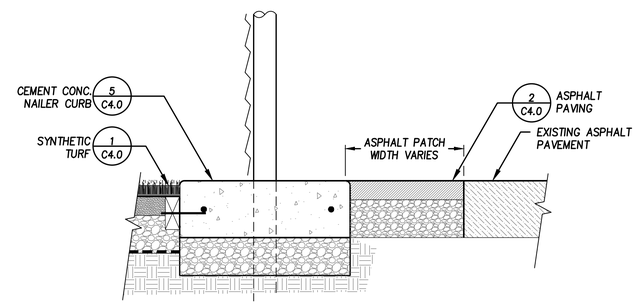


## 6 / C4.0 Asphalt Patch

SCALE: 1½"=1'

# Evergreen Playfield

22231 56th Ave W.
Mountlake Terrace, WA 98043


Robert W. Droll
Landscape Architect, PS

4405 7th Avenue SE, Ste. 203
Lacey, WA 98503
(360) 456-3813
FAX (360) 493-2063
E-MAIL bob@rwdroll.com

Landscape Architecture
Site Planning
Environmental Design

Urban Design
Land Planning
Project Management

STATE OF WASHINGTON
ROBERT W. DROLL
LANDSCAPE ARCHITECT
ID. 936 EXP. 12/09/2020


## Permit Set

PROJECT NO. 19068
DRAWING
DESIGNED BY BD, DC, RT
DRAWN BY RT, PV
CHECKED BY BD

REVISION

| DATE | CHANGE |
|---|---|
| | |

DATE: October 28, 2020

## Site Details

# C4.0

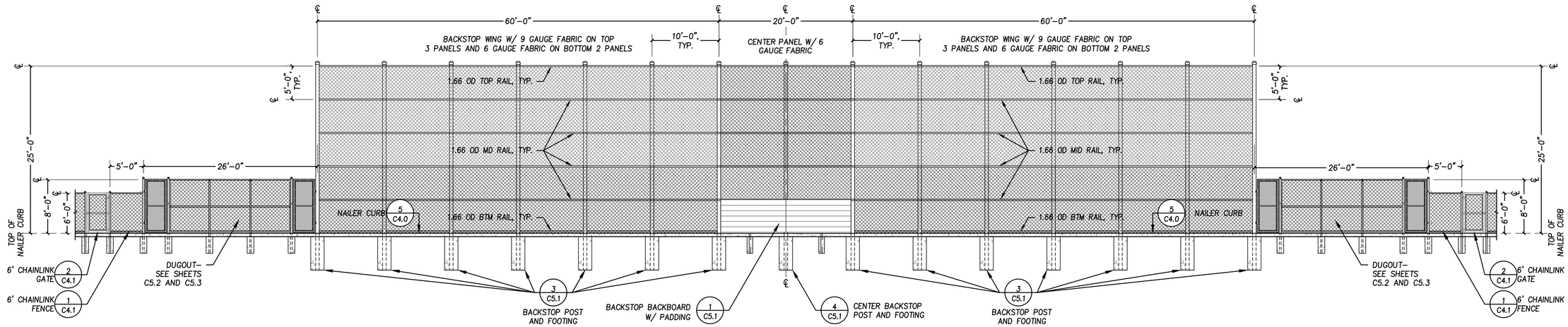


## BACKSTOP FIELD SIDE ELEVATION

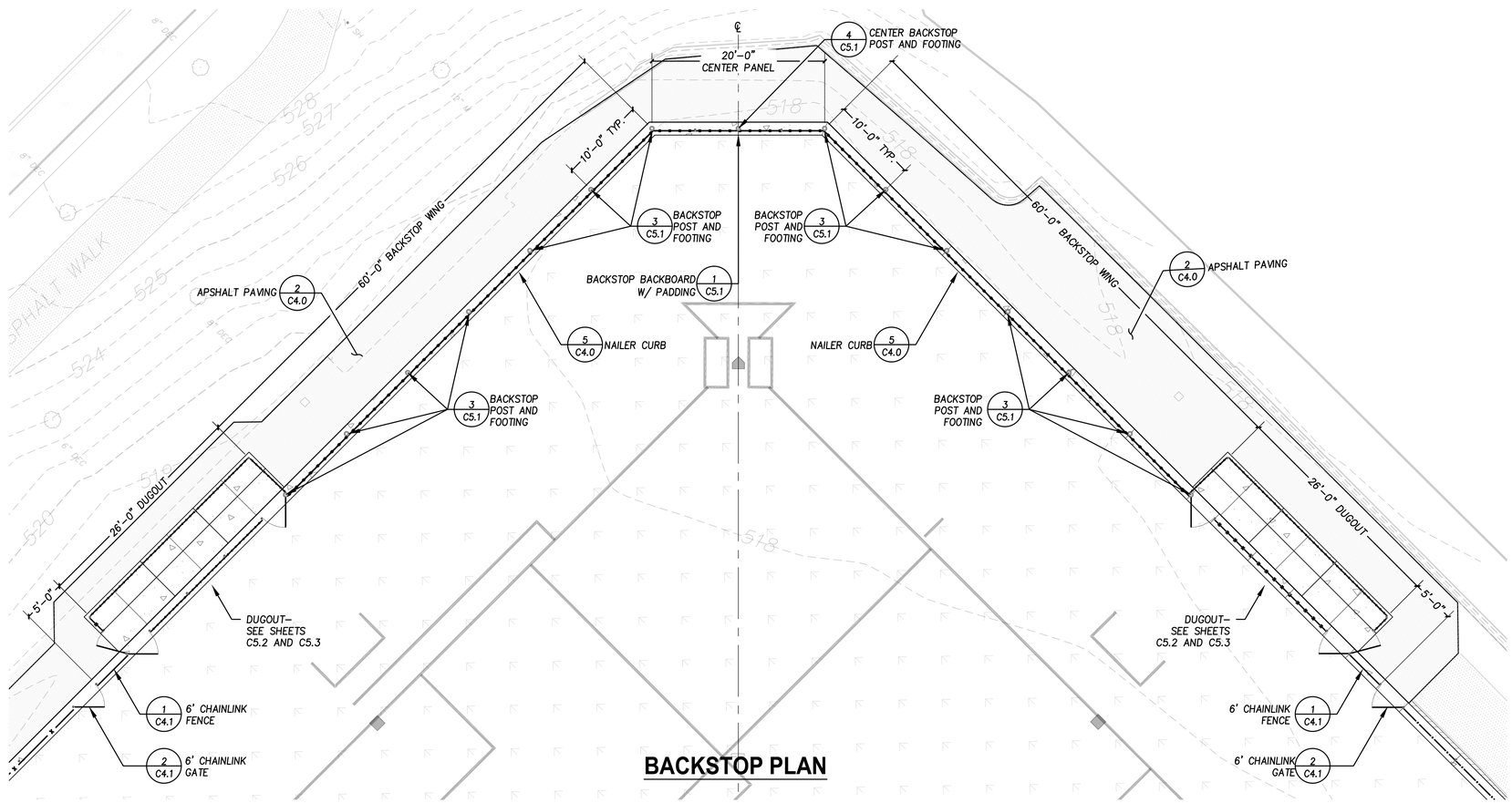


## BACKSTOP PLAN


**Evergreen Playfield**

22231 56th Ave W.
Mountlake Terrace, WA 98043

Robert W. Droll
Landscape Architect, PS

4405 7th Avenue SE, Ste. 203
Lacey, WA 98503
(360) 456-3813
FAX (360) 493-2063
E-MAIL bob@rwdroll.com

Landscape Architecture
Site Planning
Environmental Design

Urban Design
Land Planning
Project Management


STATE OF WASHINGTON ROBERT W. DROLL No. 436 EXP. 12/19/2020 LANDSCAPE ARCHITECT

**Permit Set**

PROJECT NO. 19068
DRAWING
DESIGNED BY BD, DC, RT
DRAWN BY RT
CHECKED BY BD

REVISION

| DATE | CHANGE |
|---|---|
| | |

DATE: Oct 28, 2020

**Backstop Plan & Elevation**

**C5.0**

MICHAEL SZRAMEK STATE OF WASHINGTON 20800 INTERNATIONAL UNION OF PROFESSIONAL ENGINEERS

07-29-20

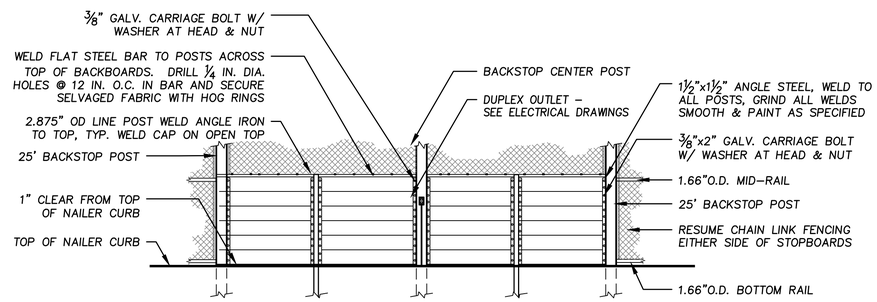


PEDESTRIAN SIDE ELEVATION

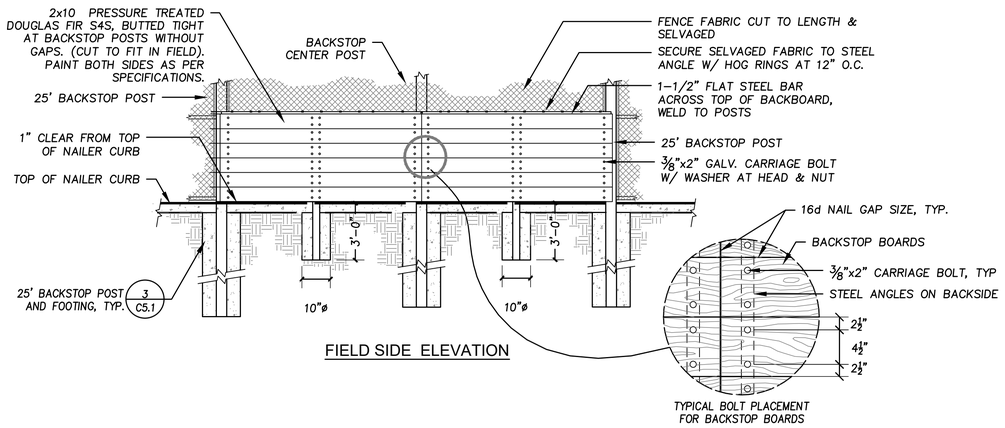


FIELD SIDE ELEVATION

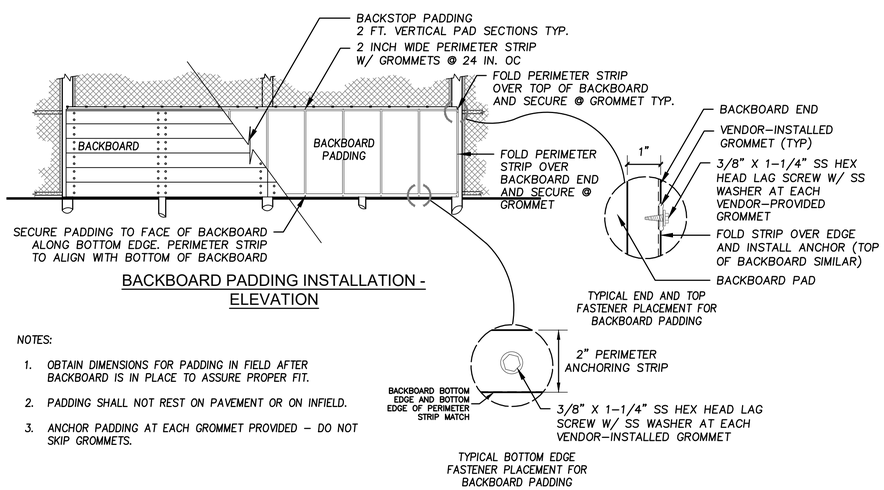


BACKBOARD PADDING INSTALLATION - ELEVATION

NOTES:

1. OBTAIN DIMENSIONS FOR PADDING IN FIELD AFTER BACKBOARD IS IN PLACE TO ASSURE PROPER FIT.
2. PADDING SHALL NOT REST ON PAVEMENT OR ON INFIELD.
3. ANCHOR PADDING AT EACH GROMMET PROVIDED – DO NOT SKIP GROMMETS.

## 1 C5.1 Backstop Backboard

SCALE: 1/4"=1'

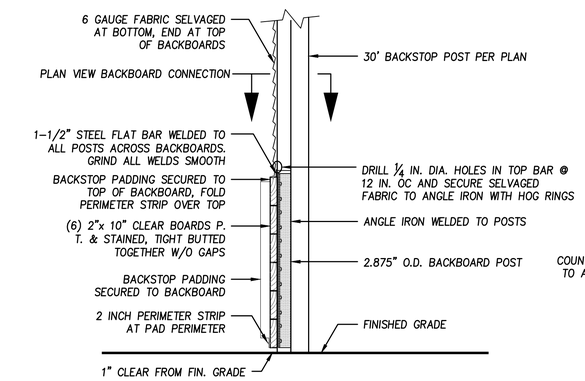


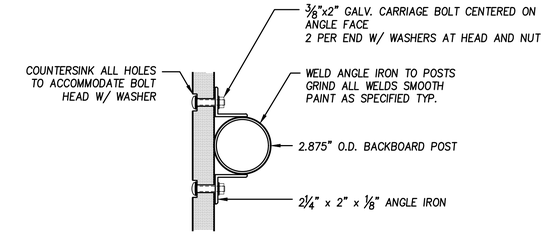


BACKBOARD CONNECTION 2.875" O.D. BACKBOARD POST

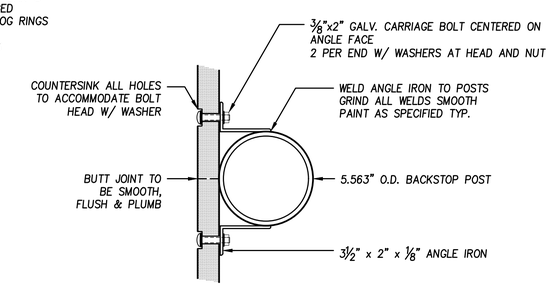


BACKBOARD CONNECTION TO 5.563 O.D. BACKSTOP POST

PLAN VIEW

## 2 C5.1 Backstop Backboard Section

SCALE: 1/2"=1'

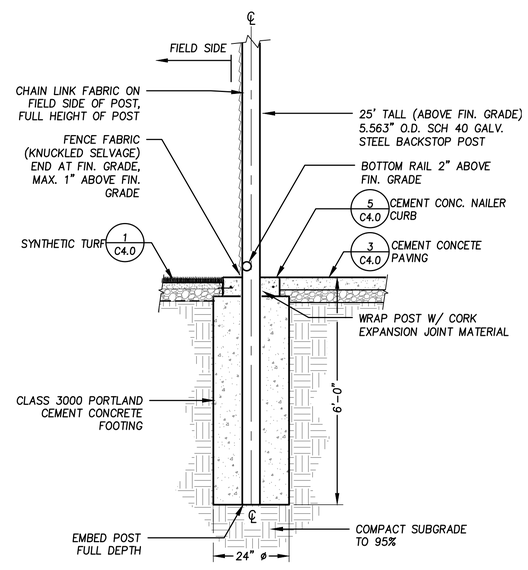


## 3 C5.1 Backstop Post and Footing

SCALE: 1/2"=1'

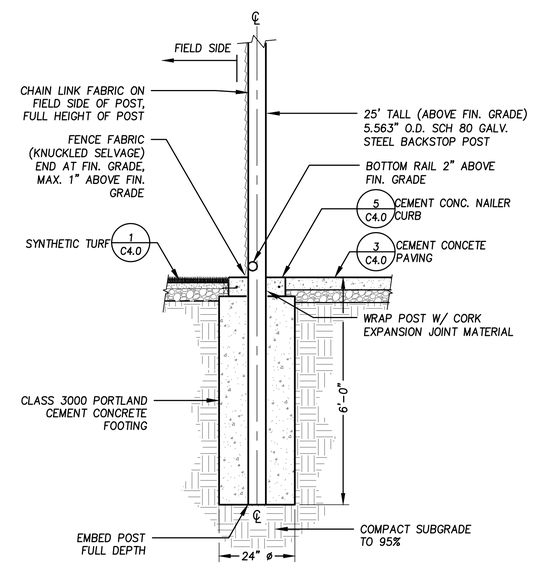


## 4 C5.1 Center Backstop Post and Footing

SCALE: 1/2"=1'

07-29-20

# Evergreen Playfield

22231 56th Ave W.
Mountlake Terrace, WA 98043


Robert W. Droll
Landscape Architect, PS

4405 7th Avenue SE, Ste. 203
Lacey, WA 98503
(360) 456-3813
FAX (360) 493-2063
E-MAIL bob@rwdroll.com

Landscape Architecture
Site Planning
Environmental Design

Urban Design
Land Planning
Project Management

## Permit Set

PROJECT NO. 19068
DRAWING XX

DESIGNED BY BD, DC, RT
DRAWN BY RT
CHECKED BY BD

REVISION

| DATE | CHANGE |
|---|---|
| | |

DATE: Oct 28, 2020

## Backstop Details

# C5.1

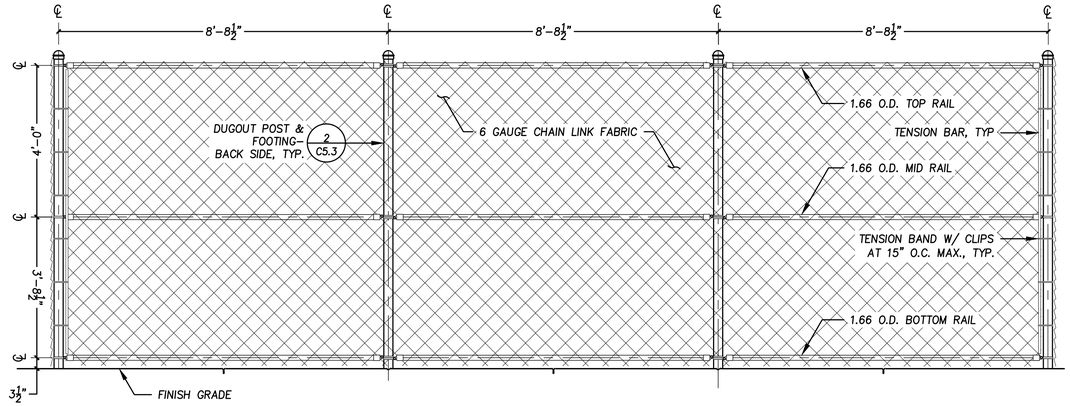


## 1 C5.2 Dugout Backside Elevation

SCALE: ½"=1'

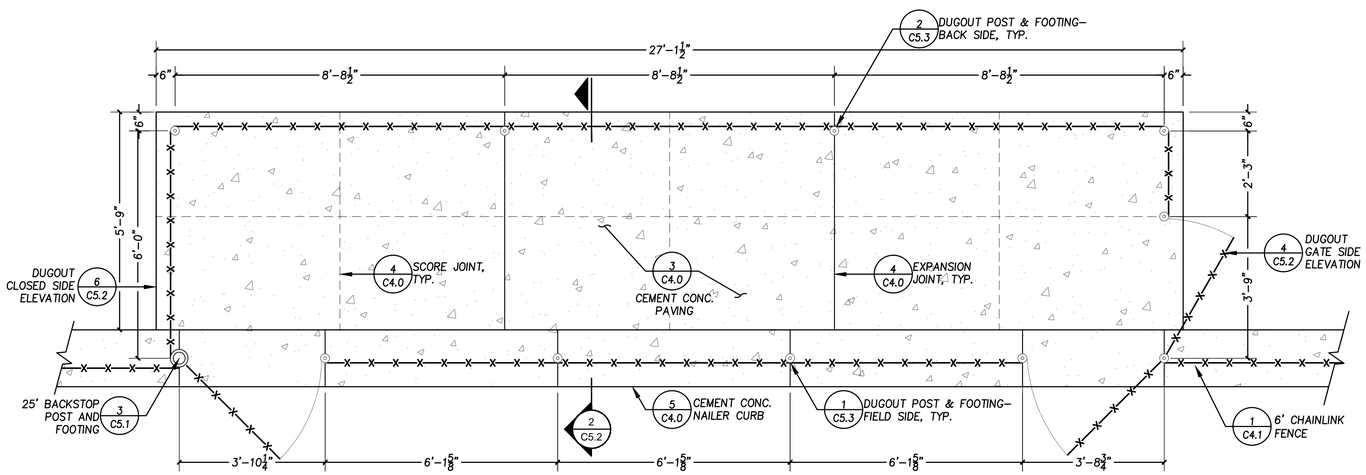


## 3 C5.2 Dugout Plan

SCALE: ½"=1'

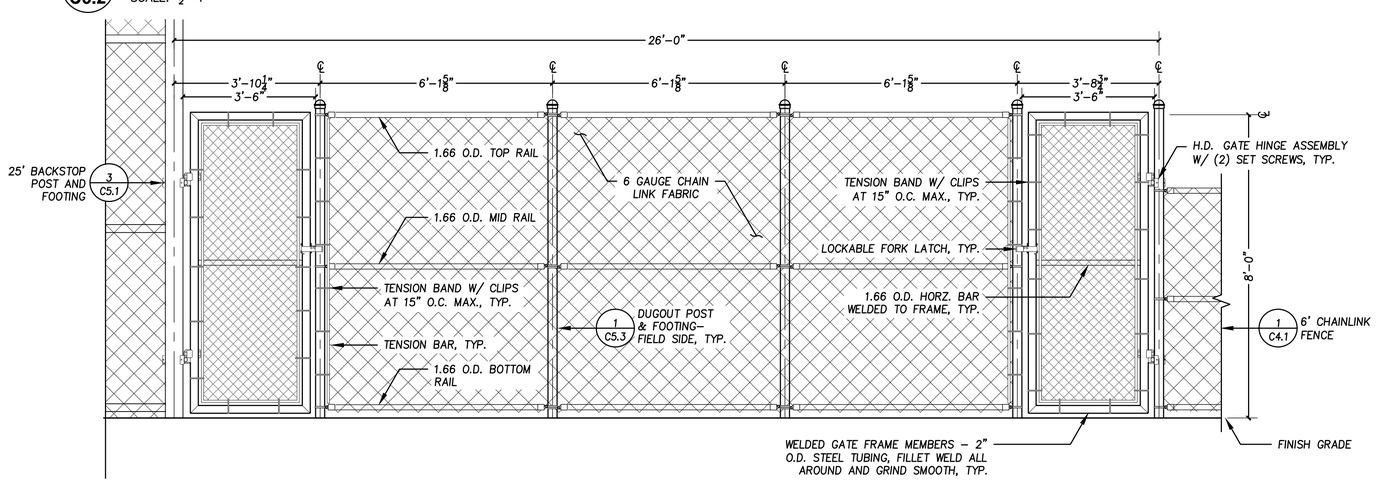


## 5 C5.2 Dugout Field Side Elevation

SCALE: ½"=1'

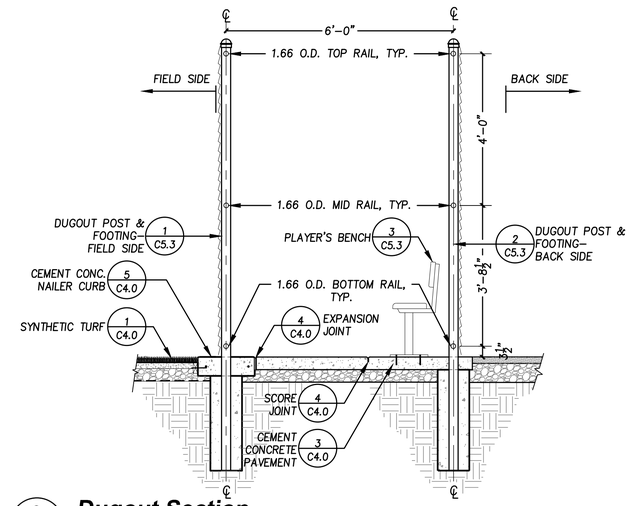


## 2 C5.2 Dugout Section

SCALE: ½"=1'

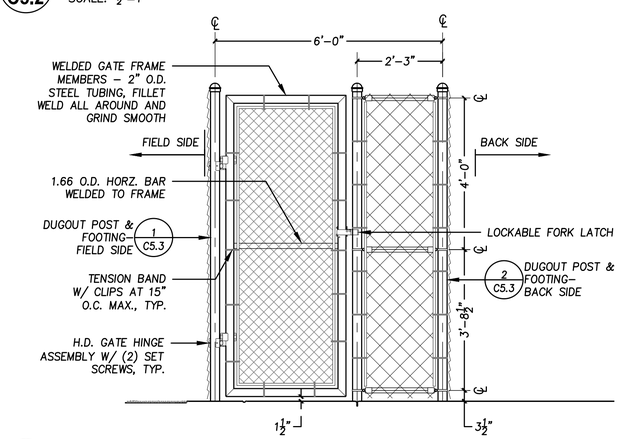


## 4 C5.2 Dugout Gate Side Elevation

SCALE: ½"=1'

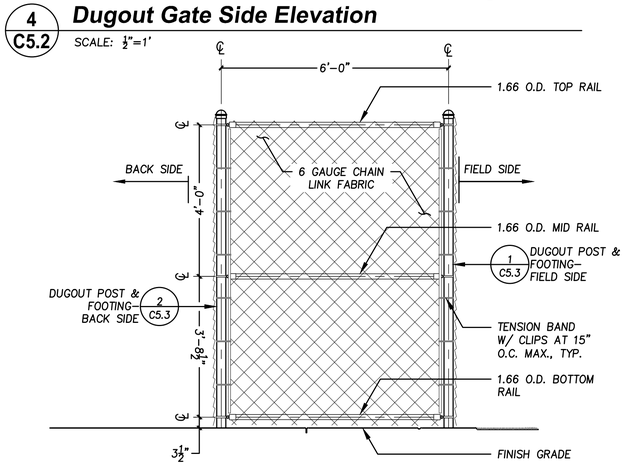


## 6 C5.2 Dugout Closed Side Elevation

SCALE: ½"=1'

# Evergreen Playfield

22231 56th Ave W.
Mountlake Terrace, WA 98043


Robert W. Droll
Landscape Architect, PS

4405 7th Avenue SE, Ste. 203
Lacey, WA 98503
(360) 456-3813
FAX (360) 493-2063
E-MAIL bob@rwdroll.com

Landscape Architecture
Site Planning
Environmental Design

Urban Design
Land Planning
Project Management


STATE OF WASHINGTON ROBERT W. DROLL No. 138 EXP. 12/09/2020 LANDSCAPE ARCHITECT

MICHAEL SZMAREK STATE OF WASHINGTON 20860 REGISTERED PROFESSIONAL ENGINEER
07-29-20

## Permit Set

PROJECT NO. 19068
DRAWING XX

DESIGNED BY BD, DC, RT
DRAWN BY RT
CHECKED BY BD

REVISION

| DATE | CHANGE |
|---|---|
| | |

DATE: Oct 28, 2020

## Dugout Plan & Details

# C5.2

Sheet 16 of 19

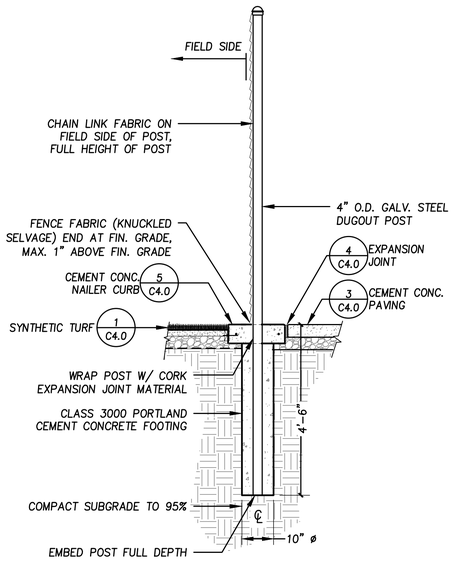


1 C5.3 **Dugout Post and Footing-Field Side**

SCALE: $\frac{1}{2}$"=1'

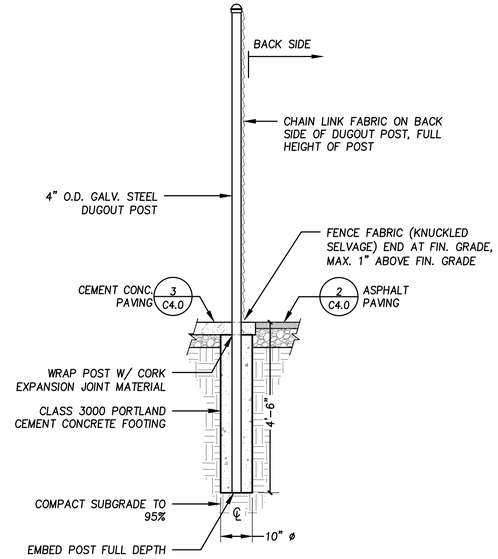


2 C5.3 **Dugout Post and Footing-Back Side**

SCALE: $\frac{1}{2}$"=1'

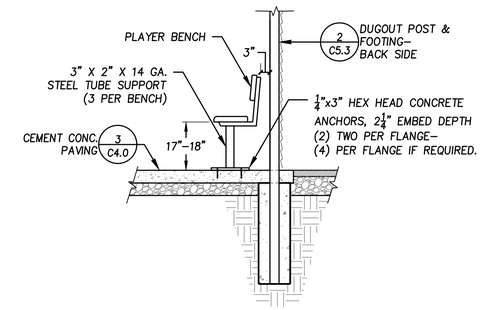


3 C5.3 **Player Bench**

SCALE: $\frac{1}{2}$"=1'

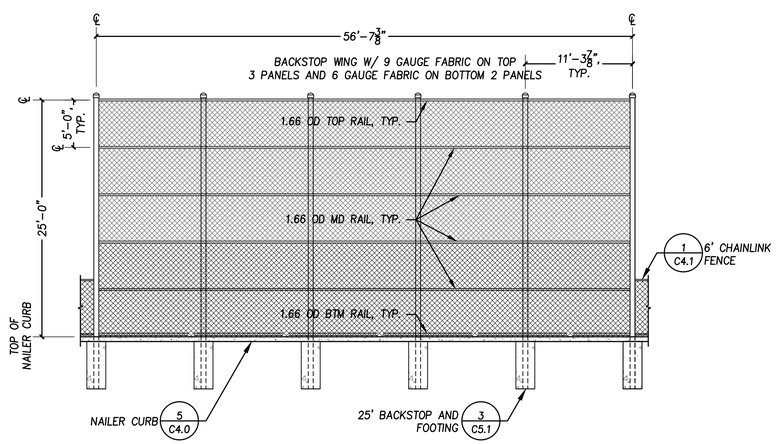


4 C5.3 **Tee Ball Backstop**

SCALE: $\frac{1}{8}$"=1'

# Evergreen Playfield

22231 56th Ave W.
Mountlake Terrace, WA 98043


Robert W. Droll
Landscape Architect, PS

4405 7th Avenue SE, Ste. 203
Lacey, WA 98503
(360) 456-3813
FAX (360) 493-2063
E-MAIL bob@rwdroll.com

Landscape Architecture
Site Planning
Environmental Design

Urban Design
Land Planning
Project Management


STATE OF WASHINGTON ROBERT W. DROLL No. 936 EXP. 12/19/2020 LANDSCAPE ARCHITECT

## Permit Set

PROJECT NO. 19068
DRAWING XX

DESIGNED BY BD, DC, RT
DRAWN BY RT
CHECKED BY BD

REVISION

| DATE | CHANGE |
|---|---|
| | |

DATE: Oct 28, 2020

CHAPTER 20 STATE OF WASHINGTON MICHAEL SZRAMEK PROFESSIONAL ENGINEER
07-29-20

## Dugout and Backstop Details

# C5.3

Sheet 17 of 19