Harry Todd Park Waterfront Renovation

April 22, 2020

REVISED

City of Lakewood Parks & Recreation

Doug Fraser, Capital Project Coordinator
6000 Main Street SW
Lakewood, WA 98499
Phone: (253) 983-7852

Consultant Team

Robert W. Droll
Landscape Architect, PS
4405 7TH Avenue SE, Suite #203
Lacey, WA 98503
(360) 456-3813

KPFF
612 Woodland Square Loop SE, Suite 100
Lacey, WA 98503
(360) 292-7230

Mott MacDonald
1601 5th Avenue, Suite 800
Seattle, WA 98101
(425) 977-2592

Cross Engineers, Inc.
923 Martin Luther King Jr. Way
Tacoma, WA 98405
(253) 759-0118

Construction Contact

Bob Droll, Landscape Architect
Robert W. Droll Landscape Architect, PS
4405 7th Ave. SE, Suite 203
Lacey, WA 98503
Phone: (360) 456-3813
Cell: (253) 970-7027

Sheet Index

G1.0	Title Sheet
G1.1	Existing Conditions
G1.2	Project Notes
L1.0	Demolition Plan
L1.1	TESC and Tree Protection Plan
L1.2	Site Preparation and TESC Details
L2.0	Park Site Plan
L2.1	Waterfront Layout & Grading Plan
L2.2	Upper Ramp Layout & Grading Plan
L2.3	Play Area Layout & Grading Plan
L2.4	Ramp Layout & Grading Enlargement
L3.0	Restroom Plan & Details
L4.0	Ramp Walls Plan
L4.1	Ramp Walls Profiles
L4.2	Ramp Walls Profiles
L4.3	Ramp Walls Profiles
L5.0	Bulkhead Profiles
L5.1	Bulkhead Profiles
L6.0	Wall Blocks
L6.1	Wall Blocks & Wall Details
L6.2	Wall Details
L7.0	Site Details
L7.1	Site Details
L7.2	Site Details
L7.3	Site Details
L8.0	Stormwater Plan
L8.1	Stormwater Details
L9.0	Irrigation System Modification Plan
L9.1	Irrigation Details
L10.0	Landscape Plan
C4.1	Roof Drain Plan
C4.2	Roof Drain Details
C4.3	Roof Drain Details
S1.0	Cover Sheet
S1.1	Sewer Plan & Profile
S1.2	Details & Notes
W1.0	Cover Sheet & General Notes
W1.1	Water Plan
W1.2	Water Details
E0.0	Electrical Legend/Fixture Schedule
E1.0	Electrical Site Plan
E2.0	Electrical Details

Mott McDonald

1	Structural Notes
2	Proposed VS Existing Overall Site Plan
3	Float Plan & Profile
4	Pier Plan
5	Pier Profile 1
6	Pier Profile 2
7	Float Details
8	Pile Sleeve Details
9	Pile Sleeve Details 2
10	Gangway Details
11	Pier Platform Turning Platform
12	Pier Details 1
13	Pier Details 2
14	Block Wall Details
15	Block Wall and Abutment Details

Site Information

8928 N Thorne Lane SW,
Lakewood, WA 98498

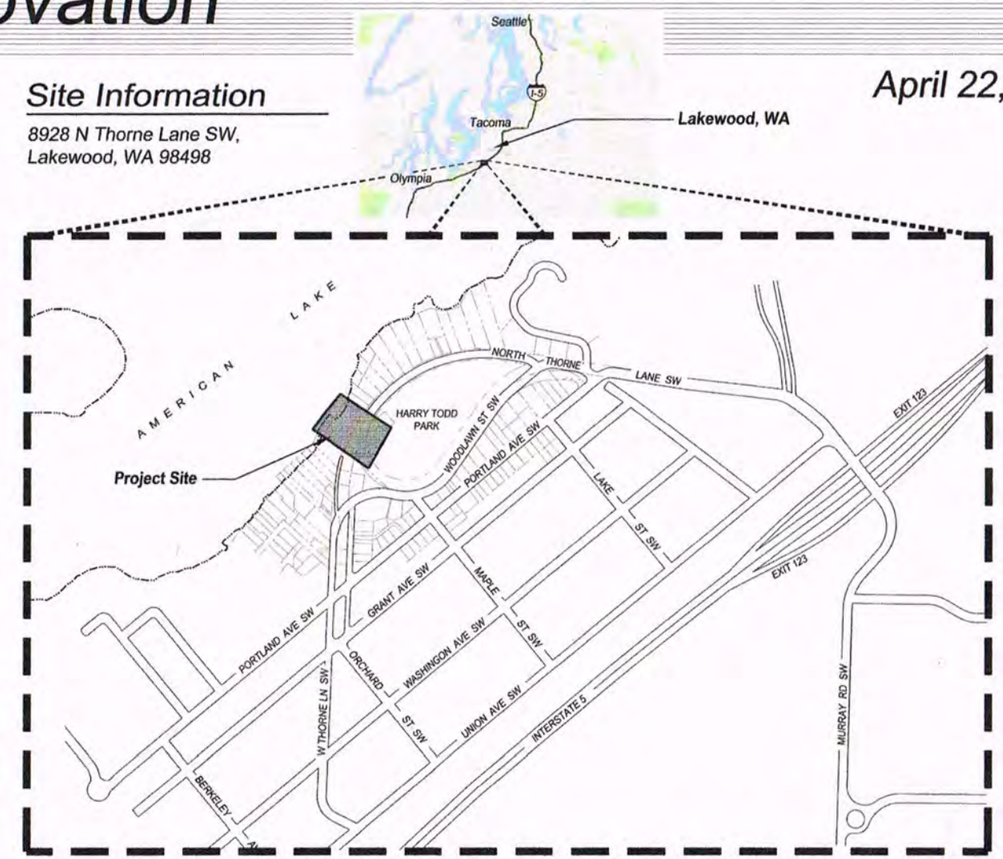

SECTION 16 - TOWNSHIP 19 - RANGE 02 - QUARTER 43

Vicinity Map

NTS

Abbreviations

ABN	ABANDON
AC	ASPHALTIC CONCRETE
ADD	ADDITIVE
ALT	ALTERNATE
ALUM	ALUMINUM
APPROX	APPROXIMATELY
A.T.	ALL-THREAD
@	AT
BC	BOTTOM OF CURB
BLKG	BLOCKING
BM	BENCH MARK
BOC	BACK OF CURB
BW	BOTTOM OF WALL
CB	CARRIAGE BOLT
CF	CUBIC FOOT
CIE	COLLECTOR INVERT ELEVATION
CL	CHAINLINK
CLR	CLEARING, CLEARANCE
CMP	CORRUGATED METAL PIPE
CO	CONTRACTING OFFICER
CONT	CONTINUOUS
CONC	CONCRETE
CORR	CORRUGATED
CPP	CORRUGATED PLASTIC PIPE
CP	CENTER POINT
CS	COUNTERSINK
CSBC	CRUSHED SURFACING BASE COURSE
CSTC	CRUSHED SURFACING TOP COURSE
CY	CUBIC YARD
DEMO	DEMOLISH
DET	DETAIL
DIA	DIAMETER
DTL	DETAIL
E	EAST
EA	EACH
EL	ELEVATION
ELEC	ELECTRICAL
EOP	EDGE OF PAVEMENT
EQ	EQUAL
EQ SP	EQUAL SPACING
EX	EXISTING
FDN	FOUNDATION
FFE	FINISH FLOOR ELEVATION
FG	FINISH GRADE
FT	FOOT, FEET
FTG	FOOTING
GA	GAUGE
GAL	GALLON
GALV	GALVANIZED
GN	FINISH GRADE – GROUND
GPM	GALLONS PER MINUTE
GW	SANDY GRAVEL
HL	HELICAL
HMA	HOT MIX ASPHALT
HP	HIGH POINT
HDPP	HIGH DENSITY POLYETHYLENE PIPE
HT	HEIGHT
HZ	HORIZONTAL
ID	INSIDE DIAMETER
I.E.	INVERT ELEVATION
IN	INCH
JT	JOINT
L	LEFT, LONG
LB	LAG BOLT
LP	LOW POINT
LS	LAG SCREW
MB	MACHINE BOLT
MAT'L	MATERIAL
MAX	MAXIMUM
MIL	1/1000th INCH
MIN	MINIMUM
MPOC	MID-POINT OF CURVE
N	NORTH
NIC	NOT IN CONTRACT
NO.	NUMBER
NOM	NOMINAL
NTS	NOT TO SCALE
OC	ON CENTER
OD	OUTSIDE DIAMETER
OR	OWNER'S REPRESENTATIVE
PC	POINT OF CURVATURE
PCC	PORTLAND CEMENT CONCRETE
PERF	PERFORATED
PERIM	PERIMETER
PI	POINT OF INTERSECTION
PLT	PLATE
PLYWD	PLYWOOD
POLY	POLYETHYLENE
PRO	PROPOSED
PSE	PUGET SOUND ENERGY
PSI	POUNDS PER SQUARE INCH
PT	POINT OF TANGENCY
PT	PRESSURE TREATED
PVC	POLYVINYL CHLORIDE
PVC	POINT OF VERTICAL CURVATURE
PVI	POINT OF VERTICAL INTERSECTION
PVMT	PAVEMENT
PVT	POINT OF VERTICAL TANGENCY
R	RADIUS
REQ'D	REQUIRED
RP	RADIUS POINT
S	SLOPE
SCH	SCHEDULE
SEC	SECTION
SHLDR	SHOULDER
SIM	SIMILAR
SM	SILTY SAND
SP'D	SPACED
SQ	SQUARE
SS	SANITARY SEWER
STD	STANDARD
STA	STATION
STL	STEEL
SY	SQUARE YARD
TC	TOP OF CURB/CONCRETE
THK	THICK
T.O.S.	TOP OF SLAB
TW	TOP OF WALL
TYP	TYPICAL
UNO	UNLESS NOTED OTHERWISE
VC	VERTICAL CURVE
VERT	VERTICAL
WD	WIDTH
W/	WITH
W/IN	WITHIN
W/O	WITHOUT
WWM	WELDED WIRE MESH

General Notes

1. ALL CONSTRUCTION SHALL COMPLY WITH THE PROJECT MANUAL AND THE STANDARD SPECIFICATIONS FOR ROAD, BRIDGE AND MUNICIPAL CONSTRUCTION BY THE WASHINGTON STATE DEPARTMENT OF TRANSPORTATION.
2. TRAFFIC CONTROL SHALL BE PROVIDED BY CONTRACTOR.
3. DRAWINGS MAY NOT BE TO SCALE. DIMENSIONAL INFORMATION SHALL BE OBTAINED FROM WRITTEN INFORMATION ONLY. VERIFY DIMENSIONS BEFORE PROCEEDING. ANY DIMENSIONAL DEVIATION FROM THAT SHOWN WHICH MAY AFFECT INTENT OR DESIGN SHALL BE BROUGHT TO THE ATTENTION OF THE LANDSCAPE ARCHITECT. OBTAIN WRITTEN RESOLUTION PRIOR TO PROCEEDING.
4. LANDSCAPE ARCHITECT SHALL BE IMMEDIATELY NOTIFIED OF DISCREPANCIES BETWEEN DRAWINGS AND SITE CONDITIONS.

As-Built

7/2/21

Bid Set

G1.0

Addendum 2

TOPOGRAPHIC SURVEY
IN
SECTION 16, TOWNSHIP 19 NORTH, RANGE 2 EAST, W.M.

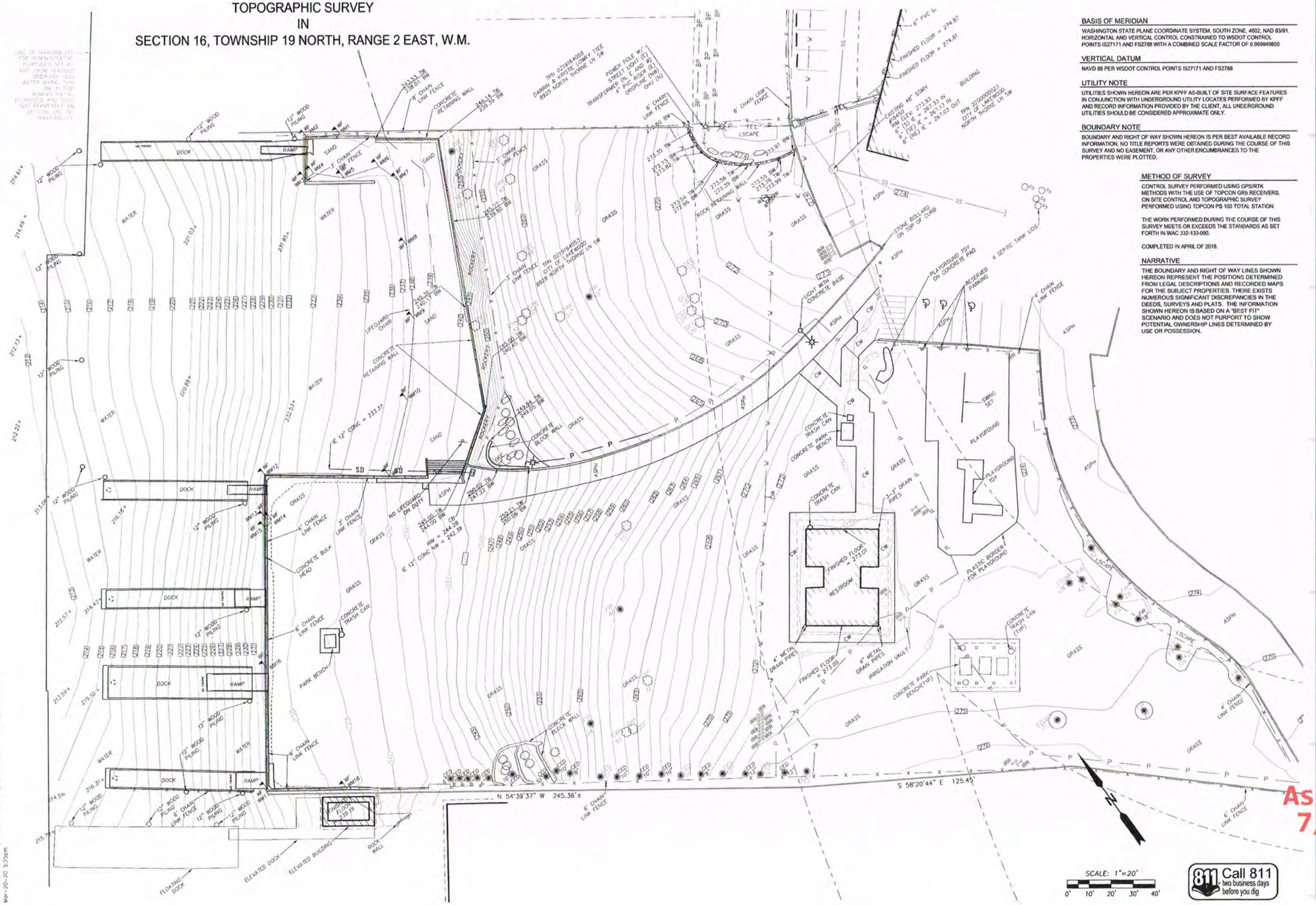

BASIS OF MERIDIAN

WASHINGTON STATE PLANE COORDINATE SYSTEM, SOUTH ZONE, 4602, NAD 83/91. HORIZONTAL AND VERTICAL CONTROL CONSTRAINED TO WSDOT CONTROL POINTS IS27171 AND FS2788 WITH A COMBINED SCALE FACTOR OF 0.999949855

VERTICAL DATUM

NAVD 88 PER WSDOT CONTROL POINTS IS27171 AND FS2788

UTILITY NOTE

UTILITIES SHOWN HEREON ARE PER KPFF AS-BUILT OF SITE SURFACE FEATURES IN CONJUNCTION WITH UNDERGROUND UTILITY LOCATES PERFORMED BY KPFF AND RECORD INFORMATION PROVIDED BY THE CLIENT, ALL UNDERGROUND UTILITIES SHOULD BE CONSIDERED APPROXIMATE ONLY.

BOUNDARY NOTE

BOUNDARY AND RIGHT OF WAY SHOWN HEREON IS PER BEST AVAILABLE RECORD INFORMATION. NO TITLE REPORTS WERE OBTAINED DURING THE COURSE OF THIS SURVEY AND NO EASEMENT, OR ANY OTHER ENCUMBRANCES TO THE PROPERTIES WERE PLOTTED.

METHOD OF SURVEY

CONTROL SURVEY PERFORMED USING GPS/RTK METHODS WITH THE USE OF TOPCON GR5 RECEIVERS. ON SITE CONTROL AND TOPOGRAPHIC SURVEY PERFORMED USING TOPCON PS 103 TOTAL STATION.

THE WORK PERFORMED DURING THE COURSE OF THIS SURVEY MEETS OR EXCEEDS THE STANDARDS AS SET FORTH IN WAC 332-130-090.

COMPLETED IN APRIL OF 2018.

NARRATIVE

THE BOUNDARY AND RIGHT OF WAY LINES SHOWN HEREON REPRESENT THE POSITIONS DETERMINED FROM LEGAL DESCRIPTIONS AND RECORDED MAPS FOR THE SUBJECT PROPERTIES. THERE EXISTS NUMEROUS SIGNIFICANT DISCREPANCIES IN THE DEEDS, SURVEYS AND PLATS. THE INFORMATION SHOWN HEREON IS BASED ON A "BEST FIT" SCENARIO AND DOES NOT PURPORT TO SHOW POTENTIAL OWNERSHIP LINES DETERMINED BY USE OR POSSESSION.

Harry Todd Park Waterfront Renovation

Lakewood Parks & Recreation Department
Lakewood, WA

Robert W. Droll
Landscape Architect, PB

4405 7th Avenue SE, Ste. 203
Lacey, WA 98503
(360) 456-3813
FAX (360) 493-2063
E-MAIL bob@wdroll.com

Landscape Architecture
Site Planning
Environmental Design

Urban Design
Land Planning
Project Management

STATE OF WASHINGTON ROBERT W. DROLL REGISTERED LANDSCAPE ARCHITECT

PROJECT NO.	18021
DRAWING	
DESIGNED BY	BD
DRAWN BY	BD, PM
CHECKED BY	BD

REVISION

DATE	CHANGE

DATE: MARCH 23, 2020

Existing Conditons

As-Built 7/2/21

G1.1

811 Call 811 two business days before you dig

D:\2018\18021 Harry Todd Park\Drawings\SHEETS\G1.1 - Existing Conditions.dwg
Mar-20-20 5:25am

GENERAL NOTES:

1. ALL WORK IN CITY RIGHT-OF-WAY REQUIRES A RIGHT-OF-WAY PERMIT FROM THE CITY OF LAKEWOOD.

2. AFTER COMPLETION OF ALL ITEMS SHOWN ON THESE PLANS AND BEFORE ACCEPTANCE OF THE PROJECT, THE CONTRACTOR SHALL OBTAIN A 'PUNCH LIST' PREPARED BY THE CITY'S INSPECTOR DETAILING REMAINING ITEMS OF WORK TO BE COMPLETED. ALL ITEMS OF WORK SHOWN ON THESE PLANS SHALL BE COMPLETED TO THE SATISFACTION OF THE CITY PRIOR TO ACCEPTANCE OF THE PROJECT.

3. ALL MATERIALS AND WORKMANSHIP SHALL CONFORM TO THE CITY OF LAKEWOOD PUBLIC WORKS CODE, ENGINEERING STANDARDS MANUAL, AND OTHER REFERENCED MANUALS OR DOCUMENTS.

4. A COPY OF THESE APPROVED PLANS, SPECIFICATIONS, AND DETAILS SHALL BE ON SITE DURING CONSTRUCTION.

5. ANY REVISIONS MADE TO THESE PLANS MUST BE REVIEWED AND APPROVED BY THE DEVELOPER'S ENGINEER AND THE CITY ENGINEER PRIOR TO ANY IMPLEMENTATION IN THE FIELD. THE CITY SHALL NOT BE RESPONSIBLE FOR ANY ERRORS AND/OR OMISSIONS IN THESE PLANS.

6. THE CONTRACTOR SHALL HAVE ALL UTILITIES VERIFIED ON THE GROUND PRIOR TO ANY CONSTRUCTION. CALL 811 OR 1-800-424-5555 (CALL BEFORE YOU DIG HOTLINE) AT LEAST 48 HOURS IN ADVANCE. CALL PIERCE COUNTY TRAFFIC (253) 531-6990 FOR LOCATIONS OF CITY-OWNED TRAFFIC SIGNALS. CALL WSDOT SIGNAL SHOP (360) 357-2616 FOR LOCATIONS OF STATE-OWNED TRAFFIC SIGNALS. THE APPLICANT AND APPLICANT'S ENGINEER SHALL BE CONTACTED IMMEDIATELY IF A CONFLICT EXISTS.

7. ANY STRUCTURE AND/OR OBSTRUCTION WHICH REQUIRE REMOVAL OR RELOCATION RELATING TO THIS PROJECT SHALL BE DONE SO AT THE DEVELOPER'S EXPENSE.

8. LOCATIONS OF EXISTING UTILITIES ARE APPROXIMATE. IT SHALL BE THE CONTRACTOR'S RESPONSIBILITY TO DETERMINE THE TRUE ELEVATIONS AND LOCATIONS OF HIDDEN UTILITIES. ALL VISIBLE ITEMS SHALL BE THE ENGINEER'S RESPONSIBILITY.

9. THE CONTRACTOR SHALL INSTALL, REPLACE, OR RELOCATE ALL SIGNS, AS SHOWN IN THE PLANS OR AS AFFECTED BY CONSTRUCTION.

10. ALL CONSTRUCTION SURVEYING FOR EXTENSIONS OF PUBLIC FACILITIES SHALL BE DONE UNDER THE DIRECTION OF A WASHINGTON STATE LICENSED PROFESSIONAL LAND SURVEYOR OR PROFESSIONAL CIVIL ENGINEER.

11. DURING CONSTRUCTION, ALL PUBLIC STREETS ADJACENT TO THIS PROJECT SHALL BE KEPT CLEAN OF ALL MATERIAL DEPOSITS RESULTING FROM ON-SITE CONSTRUCTION, AND EXISTING STRUCTURES SHALL BE PROTECTED AS DIRECTED BY THE CITY.

12. CERTIFIED RECORD (AS-BUILT) DRAWINGS ARE REQUIRED PRIOR TO PROJECT ACCEPTANCE PER LMC SECTION 12A.06.010.

13. A NPDES CONSTRUCTION STORMWATER GENERAL PERMIT & COVERAGE MAY BE REQUIRED BY THE WASHINGTON STATE DEPARTMENT OF ECOLOGY FOR THIS PROJECT. CONTACT THE DEPARTMENT OF ECOLOGY FOR MORE INFORMATION.

14. ANY DISTURBANCE OR DAMAGE TO CRITICAL AREAS AND ASSOCIATED BUFFERS, OR SIGNIFICANT TREES DESIGNATED FOR PRESERVATION AND PROTECTION SHALL BE MITIGATED IN ACCORDANCE WITH A MITIGATION PLAN REVIEWED AND APPROVED BY THE CITY OF LAKEWOOD COMMUNITY DEVELOPMENT DEPARTMENT. PREPARATION AND IMPLEMENTATION OF THE MITIGATION PLAN SHALL BE AT THE DEVELOPER'S EXPENSE.

GRADING, EROSION AND SEDIMENTATION CONTROL NOTES:

1. ON-SITE INSPECTIONS ARE REQUIRED AT THE FOLLOWING CONSTRUCTION STAGES:

INSPECTION NO. 1: INSTALLATION OF EROSION CONTROL FACILITIES PRIOR TO CLEARING
INSPECTION NO. 2: COMPLETION OF CLEARING
INSPECTION NO. 3: UPON COMPLETION OF EXCAVATION, FILLING, AND EARTHWORK
INSPECTION NO. 4: COMPLETION OF PROJECT
INSPECTION NO. 5: AS NEEDED TO DETERMINE COMPLIANCE WITH APPROVED PLANS AND/OR SPECIFICATIONS.

CALL 253-983-7891 AND LEAVE A MESSAGE TWO WORKING DAYS BEFORE INSPECTION IS REQUESTED.

2. ALL LIMITS OF CLEARING AND AREAS OF VEGETATION PRESERVATION AS PRESCRIBED ON THE PLANS SHALL BE CLEARLY FLAGGED IN THE FIELD AND OBSERVED DURING CONSTRUCTION.

3. ALL TEMPORARY SEDIMENTATION AND EROSION CONTROL MEASURES, AND PROTECTIVE MEASURES FOR CRITICAL AREAS AND SIGNIFICANT TREES SHALL BE INSTALLED PRIOR TO INITIATING ANY CONSTRUCTION ACTIVITIES.

4. ALL REQUIRED SEDIMENTATION AND EROSION CONTROL FACILITIES MUST BE CONSTRUCTED AND IN OPERATION PRIOR TO ANY LAND CLEARING AND/OR OTHER CONSTRUCTION TO ENSURE THAT SEDIMENT LADEN WATER DOES NOT ENTER ANY EXISTING DRAINAGE SYSTEM. THE CONTRACTOR SHALL SCHEDULE AN INSPECTION OF THE EROSION CONTROL FACILITIES PRIOR TO ANY LAND CLEARING AND/OR OTHER CONSTRUCTION. ALL EROSION AND SEDIMENT FACILITIES SHALL BE MAINTAINED IN A SATISFACTORY CONDITION AS DETERMINED BY THE CITY, UNTIL SUCH TIME THAT CLEARING AND/OR CONSTRUCTION IS COMPLETED AND THE POTENTIAL FOR ONSITE EROSION HAS PASSED. THE IMPLEMENTATION, MAINTENANCE, REPLACEMENT, AND ADDITIONS TO THE EROSION AND SEDIMENTATION CONTROL SYSTEMS SHALL BE THE RESPONSIBILITY OF THE PERMITTEE.

5. THE EROSION AND SEDIMENTATION CONTROL SYSTEM FACILITIES DEPICTED ON THESE PLANS ARE INTENDED TO BE MINIMUM REQUIREMENTS TO MEET ANTICIPATED SITE CONDITIONS. AS CONSTRUCTION PROGRESSES AND UNEXPECTED OR SEASONAL CONDITIONS DICTATE, FACILITIES WILL BE NECESSARY TO ENSURE COMPLETE SILTATION CONTROL ON THE SITE. DURING THE COURSE OF CONSTRUCTION, IT SHALL BE THE OBLIGATION AND RESPONSIBILITY OF THE PERMITTEE TO ADDRESS ANY NEW CONDITIONS THAT MAY BE CREATED BY THEIR ACTIVITIES AND TO PROVIDE ADDITIONAL FACILITIES, OVER AND ABOVE THE MINIMUM REQUIREMENTS, AS MAY BE NEEDED TO PROTECT ADJACENT PROPERTIES, SENSITIVE AREAS, NATURAL WATER COURSES, AND/OR STORM DRAINAGE SYSTEMS.

6. ANY DISTURBED AREA WHICH HAS BEEN STRIPPED OF VEGETATION AND WHERE NO FURTHER WORK IS ANTICIPATED FOR A PERIOD OF 7 DAYS OR MORE DURING THE DRY SEASON (MAY 1 - SEPT 30) OR 2 DAYS OR MORE IN THE WET SEASON (OCT 1 - APR 30), SHALL BE IMMEDIATELY STABILIZED WITH MULCHING, GRASS PLANTING, OR OTHER APPROVED EROSION CONTROL TREATMENT APPLICABLE TO THE TIME OF YEAR IN QUESTION. GRASS SEEDING ALONE WILL BE ACCEPTABLE ONLY DURING THE MONTHS OF MAY THROUGH SEPTEMBER INCLUSIVE. SEEDING MAY PROCEED OUTSIDE THE SPECIFIED TIME PERIOD WHENEVER IT IS IN THE INTEREST OF THE PERMITTEE BUT SHALL BE AUGMENTED WITH MULCHING, NETTING, OR OTHER TREATMENT APPROVED BY THE CITY.

7. IN CASE EROSION OR SEDIMENTATION OCCURS TO ADJACENT PROPERTIES, ALL CONSTRUCTION WORK WITHIN THE DEVELOPMENT THAT WILL FURTHER AGGRAVATE THE SITUATION MUST CEASE, AND THE OWNER/CONTRACTOR SHALL IMMEDIATELY COMMENCE RESTORATION METHODS. RESTORATION ACTIVITY WILL CONTINUE UNTIL SUCH TIME AS THE AFFECTED PROPERTY OWNER IS SATISFIED.

8. NO TEMPORARY OR PERMANENT STOCKPILING OF MATERIALS OR EQUIPMENT SHALL OCCUR WITHIN CRITICAL AREAS OR ASSOCIATED BUFFERS, OR THE CRITICAL ROOT ZONE FOR VEGETATION PROPOSED FOR RETENTION.

PROTECTION OF EXISTING STRUCTURES:

1. WHEN THE PROJECT DRAWINGS REQUIRE STEEL PILE DRIVING/HEAVY EQUIPMENT CONSTRUCTION OPERATIONS IN CLOSE PROXIMITY TO EXISTING STRUCTURES OR NEWLY CONSTRUCTED STRUCTURES, TAKE ALL REASONABLE PRECAUTIONS TO PREVENT DAMAGE TO SUCH STRUCTURES. THE REQUIREMENTS DESCRIBED HEREIN APPLY TO ALL TYPES OF STRUCTURES THAT MAY BE ADVERSELY AFFECTED BY CONSTRUCTION OPERATIONS DUE TO VIBRATIONS, GROUND LOSS, OR GROUND HEAVE. DO NOT COMMENCE WORK UNTIL MAKING ARRANGEMENTS TO PROTECT AGAINST DAMAGE THAT MIGHT RESULT IN EXPENSE, LOSS, DISRUPTION OF SERVICE, OR OTHER UNDUE INCONVENIENCE TO THE PUBLIC OR TO THE OWNER. THE CONTRACTOR IS SOLELY AND DIRECTLY RESPONSIBLE TO THE OWNER AND OPERATORS OF SUCH PROPERTIES FOR ALL DAMAGES, INJURIES, EXPENSES, LOSSES, INCONVENIENCES, OR DELAYS CAUSED BY THE CONTRACTOR'S OPERATIONS. MONITOR EXISTING STRUCTURES AS SHOWN ON PLANS OR AS INSTRUCTED BY THE ENGINEER IN AN APPROVED MANNER. NOTIFY THE ENGINEER AND OWNER OF ANY MOVEMENTS DETECTED AND IMMEDIATELY TAKE ANY REMEDIAL MEASURES REQUIRED TO PREVENT DAMAGE TO THE EXISTING STRUCTURES.

2. PILE DRIVING/HEAVY EQUIPMENT VIBRATIONS ASSESSMENT: CONTRACTOR SHALL BE RESPONSIBLE FOR THE EVALUATION OF VIBRATIONS CAUSED BY PILE DRIVING TO ENSURE NO DAMAGE IS CAUSED TO ADJACENT STRUCTURES AND FACILITIES AS A RESULT OF THE PILE DRIVING ACTIVITIES. CONTRACTOR SHALL CONDUCT A VIBRATION AND SETTLEMENT ANALYSIS TO DETERMINE IF VIBRATION OR SETTLEMENT MONITORING IS NEEDED FOR THE PROTECTION OF ADJACENT STRUCTURES, FACILITIES, AND UPLAND SITES. ANALYSIS AND ASSESSMENT SHALL BE CONDUCTED BY A WASHINGTON STATE LICENSED PROFESSIONAL GEOTECHNICAL ENGINEER. THRESHOLD FOR ACCEPTABLE VIBRATION LEVEL (PEAK PARTICLE VELOCITY) AT THE SPU PROPERTY LINE WILL BE BASED ON INDUSTRY STANDARDS, SUCH AS AASHTO AND FEDERAL TRANSIT AUTHORITY, FOR HUMAN AND BUILDING EFFECTS. PILE DRIVING PLAN SHALL BE MODIFIED AS NEEDED TO COMPLY WITH THE NO DAMAGE TO ADJACENT PROPERTY FACILITIES REQUIREMENT. CONTRACTOR MAY ELECT TO IMPLEMENT VIBRATION MONITORING DEVICES TO ASSIST WITH ENSURING NO IMPACT TO ADJACENT PROPERTY STRUCTURES. IF VIBRATION MONITORING IS REQUIRED, IT SHALL BE DONE IN ACCORDANCE WITH ANSI S2.47-1990 GUIDELINES FOR THE MEASUREMENT OF VIBRATIONS AND EVALUATION OF THEIR EFFECTS ON STRUCTURES AND FACILITIES.

As-Built
7/2/21

Call 811 two business days before you dig

Harry Todd Park Waterfront Renovation

Lakewood Parks & Recreation Department
Lakewood, WA

Robert W. Droll
Landscape Architect, PS

4405 7th Avenue SE, Ste. 203
Lacey, WA 98503
(360) 456-3813
FAX (360) 493-2063
E-MAIL bob@wdroll.com

Landscape Architecture
Site Planning
Environmental Design

Urban Design
Land Planning
Project Management

STATE OF WASHINGTON ROBERT W. DROLL LICENSED LANDSCAPE ARCHITECT EXP. 6/30/2020

PROJECT NO. 18021
DRAWING
DESIGNED BY BD
DRAWN BY BD, PM
CHECKED BY BD

REVISION

DATE	CHANGE

DATE: MARCH 23, 2020

Project Notes

G1.2

D:\2018\18021 Harry Todd Park\Drawings\SHEETS\G1.2 - Project Notes.dwg
Mar 26, 2020 7:10pm

REVISED

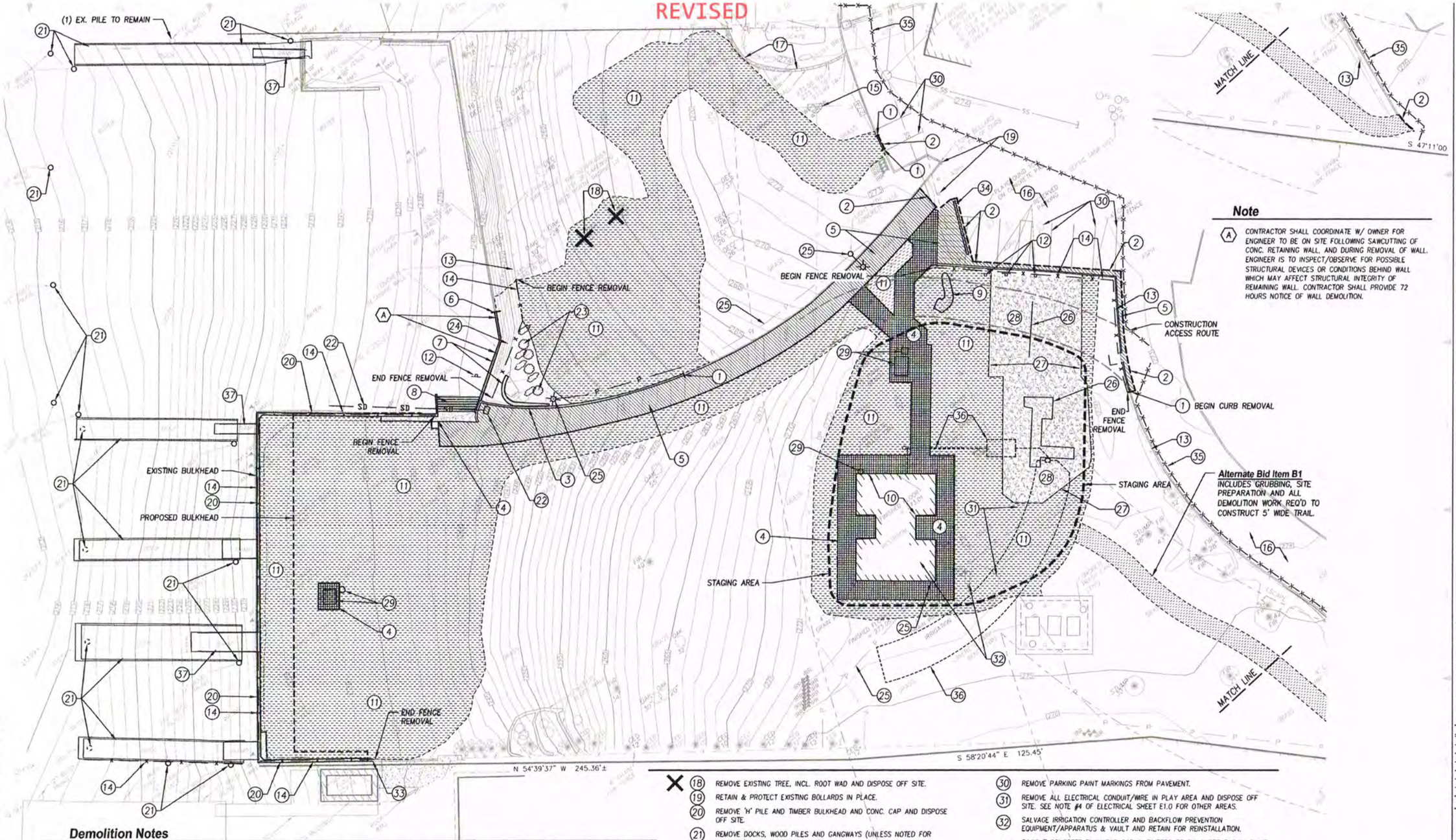

Alternate Bid Item B1
INCLUDES GRUBBING, SITE PREPARATION AND ALL DEMOLITION WORK REQ'D TO CONSTRUCT 5' WIDE TRAIL.

Note

(A) CONTRACTOR SHALL COORDINATE W/ OWNER FOR ENGINEER TO BE ON SITE FOLLOWING SAWCUTTING OF CONC. RETAINING WALL, AND DURING REMOVAL OF WALL. ENGINEER IS TO INSPECT/OBSERVE FOR POSSIBLE STRUCTURAL DEVICES OR CONDITIONS BEHIND WALL WHICH MAY AFFECT STRUCTURAL INTEGRITY OF REMAINING WALL. CONTRACTOR SHALL PROVIDE 72 HOURS NOTICE OF WALL DEMOLITION.

Demolition Notes

1. SAWCUT EX. CURB WHERE SHOWN, REMOVE SECTION TO FULL DEPTH AND DISPOSE OFF SITE.
2. SAWCUT EX. ASPHALT OR CONCRETE PAVEMENT WHERE SHOWN, REMOVE & DISPOSE OFF SITE.
3. REMOVE CONCRETE CURB AND DISPOSE OFF SITE.
4. REMOVE CONCRETE PAVEMENT AND DISPOSE OFF SITE.
5. REMOVE ASPHALT PAVEMENT AND DISPOSE OFF SITE. SALVAGE CSBC – SEE DETAIL 9 OF SHEET L7.0.
6. SAWCUT CONCRETE WALL AND FOOTING, CLEAN STRAIGHT VERTICAL LINE SQUARE TO FACE OF WALL.
7. REMOVE CONCRETE WALL & FOOTING, OR CONCRETE BLOCK WALL TO FULL DEPTH AND DISPOSE OFF SITE.
8. DEMOLISH CONCRETE STAIRS AND DISPOSE OFF SITE.
9. REMOVE CONCRETE PLAY SCULPTURE AND DISPOSE OFF SITE.
10. DEMOLISH EXISTING RESTROOM AND STORAGE BUILDING, INCL. FOUNDATION, AND DISPOSE OFF SITE. DISCONNECT WATER & POWER PER APPLICABLE CODES/REGULATIONS.
11. GRUB AREA TO 4" DEPTH AND DISPOSE OFF SITE.
12. REMOVE EXISTING SIGN AND POST & RETAIN FOR REINSTALLATION. REMOVE FOOTING & DISPOSE OFF SITE.
13. RETAIN & PROTECT EXISTING CHAIN LINK FENCE IN PLACE.
14. REMOVE EXISTING CHAIN LINK FENCE. SALVAGE SUFFICIENT QUANTITY OF FABRIC & POSTS TO REINSTALL WHERE INDICATED AS GUARDRAIL TYPE 1 ON SHEETS L2.3 & L2.4. DISPOSE REMAINING CHAIN LINK FENCE MATERIAL OFF SITE.
15. RETAIN & PROTECT EXISTING VALVE BOX OR VAULT IN PLACE.
16. PROTECT EXISTING PAVEMENT TO REMAIN FROM DAMAGE.
17. PROTECT EXISTING LANDSCAPE IMPROVEMENTS FROM DAMAGE.
18. REMOVE EXISTING TREE, INCL. ROOT WAD AND DISPOSE OFF SITE.
19. RETAIN & PROTECT EXISTING BOLLARDS IN PLACE.
20. REMOVE 'H' PILE AND TIMBER BULKHEAD AND CONC. CAP AND DISPOSE OFF SITE.
21. REMOVE DOCKS, WOOD PILES AND GANGWAYS (UNLESS NOTED FOR SALVAGE) AND DISPOSE OFF SITE.
22. REMOVE CATCH BASIN AND FULL LENGTH OF 12" CONC. DRAIN PIPE & DISPOSE OFF SITE.
23. REMOVE SHRUBS & SMALL TREE(S), INCLUDING ROOT MASS, & DISPOSE OFF SITE.
24. REMOVE BOULDERS FROM ROCKERY AS REQUIRED TO CONSTRUCT RAMP & WALLS. SALVAGE ENOUGH BOULDERS TO ARMOR RESTORED SLOPE BETWEEN LAWN AND TOP OF WALL AND STORE ON SITE. DISPOSE REMAINDER OFF SITE.
25. SEE ELECTRICAL SITE PLAN E1.0 FOR ALL ELECTRICAL DEMOLITION.
26. DISMANTLE & REMOVE PLAYGROUND EQUIPMENT & DISPOSE OFF SITE.
27. PLASTIC PLAY AREA BORDER – TO BE SALVAGED BY OWNER.
28. REMOVE WOOD FIBER PLAYGROUND SURFACING TO BARE SOIL AND DISPOSE OFF SITE.
29. REMOVE CONCRETE SITE FURNITURE & DISPOSE OFF SITE.
30. REMOVE PARKING PAINT MARKINGS FROM PAVEMENT.
31. REMOVE ALL ELECTRICAL CONDUIT/WIRE IN PLAY AREA AND DISPOSE OFF SITE. SEE NOTE #4 OF ELECTRICAL SHEET E1.0 FOR OTHER AREAS.
32. SALVAGE IRRIGATION CONTROLLER AND BACKFLOW PREVENTION EQUIPMENT/APPARATUS & VAULT AND RETAIN FOR REINSTALLATION.
33. SAWCUT CONCRETE BULKHEAD CAP & TIMBERS BELOW WHERE SHOWN. MAKE CUT STRAIGHT, VERTICAL AND CLEAN. REMOVE ALL OF BULKHEAD WATERWARD OF CUT & DISPOSE OFF SITE. PROTECT & RETAIN CHAINLINK FENCING TO REMAIN.
34. SAWCUT ASPHALT PAVEMENT 1.0' FROM FACE OF CURB. REMOVE CURB AND PAVEMENT & DISPOSE OFF SITE.
35. INSTALL 435 L.F. TEMPORARY SECURITY FENCE PER DETAIL 6 OF SHT. L1.2.
36. EXISTING SEPTIC SYSTEM LOCATION SHOWN IS APPROXIMATE, NOT LOCATED BY SURVEY. CONTRACTOR IS RESPONSIBLE FOR LOCATION AND VERIFICATION OF ALL COMPONENTS. REMOVE ALL SURFACE COMPONENTS, REMOVE SEPTIC TANK AND ALL PIPING FROM BUILDING TO DRAINFIELD. ABANDON DRAINFIELD IN PLACE. PERFORM ALL WORK IN ACCORDANCE WITH PROJECT MANUAL.
37. SALVAGE GANGWAYS INDICATED AND PROVIDE TO OWNER. CONTRACTOR TO PROVIDE EQUIPMENT AND LABOR TO LOAD GANGWAYS ONTO OWNER'S TRUCK. ALL LOADING TO OCCUR IN ONE CALENDAR DAY. PROVIDE OWNER WITH FIVE CALENDAR DAYS OF NOTICE ON DATE AND TIME CONTRACTOR WILL LOAD GANGWAYS ON OWNER'S TRUCK.

SCALE: 1"=20'
0' 10' 20' 30' 40'

Call 811 two business days before you dig

Harry Todd Park Waterfront Renovation

Lakewood Parks & Recreation Department
Lakewood, WA

Robert W. Droll
Landscape Architect, PS
4405 7th Avenue SE, Ste. 203
Lacey, WA 98503
(360) 456-3813
FAX (360) 493-2065
E-MAIL bob@wdroll.com
Landscape Architecture
Site Planning
Environmental Design
Urban Design
Land Planning
Project Management
STATE OF WASHINGTON ROBERT W. DROLL REG. NO. 938 EXP. 6/30/2020 LANDSCAPE ARCHITECT

PROJECT NO. 18021
DRAWING
DESIGNED BY BD
DRAWN BY BD, PM
CHECKED BY BD

REVISION

DATE	CHANGE
4/22/20	ADDENDUM 2

DATE: APRIL 22, 2020

Demolition Plan

As-Built
7/2/21

L1.0

O:\2018\18021 Harry Todd Park\Drawings\SHEETS\ADDENDUM 2\04_L1.0 - Demolition Plan.dwg
Apr-22-20 1:22pm

REVISED

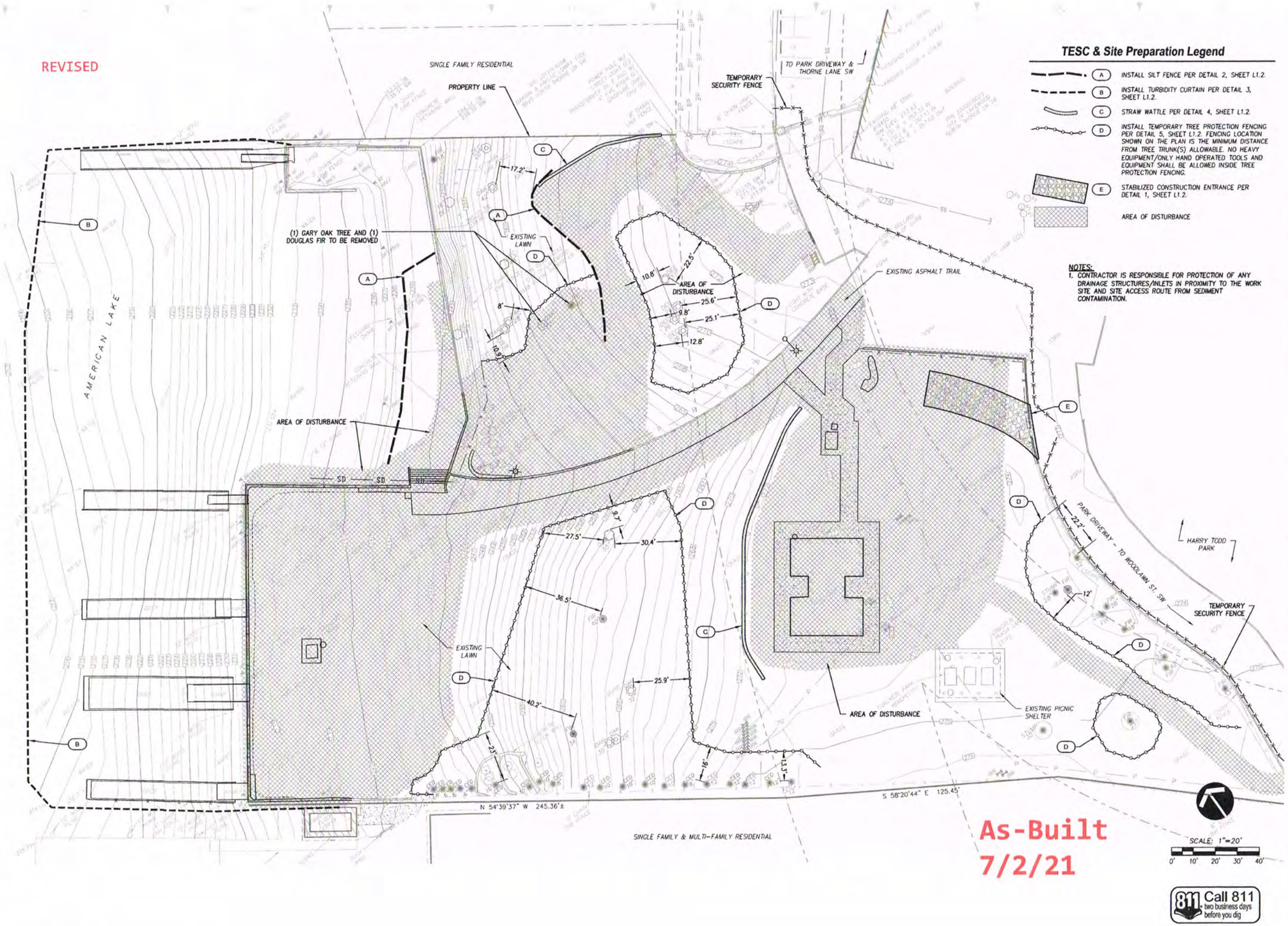

TESC & Site Preparation Legend

- (A) INSTALL SILT FENCE PER DETAIL 2, SHEET L1.2.
- (B) INSTALL TURBIDITY CURTAIN PER DETAIL 3, SHEET L1.2.
- (C) STRAW WATTLE PER DETAIL 4, SHEET L1.2.
- (D) INSTALL TEMPORARY TREE PROTECTION FENCING PER DETAIL 5, SHEET L1.2. FENCING LOCATION SHOWN ON THE PLAN IS THE MINIMUM DISTANCE FROM TREE TRUNK(S) ALLOWABLE. NO HEAVY EQUIPMENT/ONLY HAND OPERATED TOOLS AND EQUIPMENT SHALL BE ALLOWED INSIDE TREE PROTECTION FENCING.
- (E) STABILIZED CONSTRUCTION ENTRANCE PER DETAIL 1, SHEET L1.2.
- AREA OF DISTURBANCE

NOTES:
1. CONTRACTOR IS RESPONSIBLE FOR PROTECTION OF ANY DRAINAGE STRUCTURES/INLETS IN PROXIMITY TO THE WORK SITE AND SITE ACCESS ROUTE FROM SEDIMENT CONTAMINATION.

As-Built
7/2/21

Call 811 two business days before you dig

Harry Todd Park Waterfront Renovation

Lakewood Parks & Recreation Department
Lakewood, WA

Robert W. Droll
Landscape Architect, PS

4405 7th Avenue SE, Ste. 203
Lacey, WA 98503
(360) 456-3813
FAX (360) 493-2063
E-MAIL bob@wdroll.com

Landscape Architecture
Site Planning
Environmental Design

Urban Design
Land Planning
Project Management

STATE OF WASHINGTON ROBERT W. DROLL LANDSCAPE ARCHITECT

PROJECT NO. 18021
DRAWING
DESIGNED BY BD
DRAWN BY BD, PM
CHECKED BY BD

REVISION DATE	CHANGE
4/22/20	ADDENDUM 2

DATE: APRIL 22, 2020

TESC and Tree Protection Plan

L1.1

O:\2018\18021 Harry Todd Park\Drawings\SHEETS\ADDENDUM 2\G5_L1.1 - TESC & Tree Protection.dwg
Apr-22-20 1:27pm

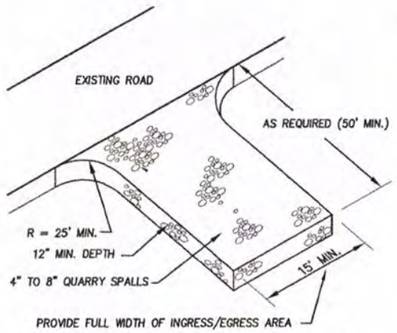

Maintenance Standards Notes:

1. CONTRACTOR IS RESPONSIBLE FOR MAINTAINING AND CLEANING THE APPROACH ON A REGULAR BASIS.
2. CONTRACTOR IS RESPONSIBLE FOR PROVIDING ADDITIONAL QUARRY SPALLS AS REQUIRED TO MAINTAIN PROPER FUNCTIONING OF THE ENTRANCE AS CONSTRUCTION PROGRESSES.
3. IF THE ENTRANCE IS NOT PREVENTING SEDIMENT FROM BEING TRACKED ONTO PAVEMENT, THEN ALTERNATIVE MEASURES TO KEEP THE STREETS FREE OF SEDIMENT SHALL BE USED. THIS MAY INCLUDE STREET SWEEPING, AN INCREASE IN THE DIMENSIONS OF THE ENTRANCE, OR THE INSTALLATION OF A WHEEL WASH. IF WASHING IS USED, IT SHALL BE DONE ON AN AREA COVERED WITH CRUSHED ROCK, AND WASH WATER SHALL DRAIN TO A SEDIMENT TRAP OR POND.
4. ANY SEDIMENT THAT IS TRACKED ONTO PAVEMENT SHALL BE REMOVED IMMEDIATELY BY SWEEPING. THE PAVEMENT SHALL NOT BE CLEANED BY WASHING DOWN THE STREET, EXCEPT WHEN SWEEPING IS INEFFECTIVE AND THERE IS A THREAT TO PUBLIC SAFETY. IF IT IS NECESSARY TO WASH THE STREETS, THE CONSTRUCTION OF A SMALL SUMP SHALL BE CONSIDERED. THE SEDIMENT WOULD THEN BE WASHED INTO THE SUMP.
5. ANY QUARRY SPALLS THAT ARE LOOSENED FROM THE PAD AND END UP ON THE ROADWAY SHALL BE REMOVED IMMEDIATELY.
6. IF VEHICLES ARE ENTERING OR EXITING THE SITE AT POINTS OTHER THAN THE CONSTRUCTION ENTRANCE, FENCING SHALL BE INSTALLED TO CONTROL TRAFFIC.

1 / L1.2 Stabilized Construction Entrance

NOT TO SCALE

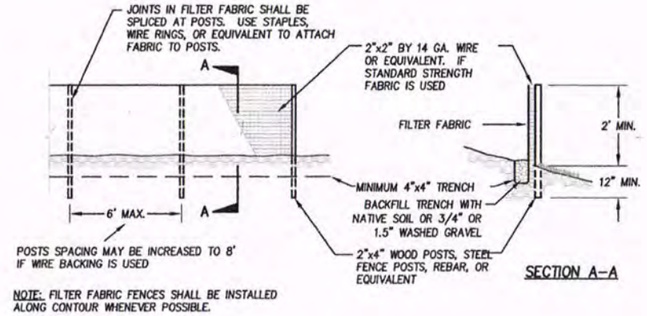

NOTE: FILTER FABRIC FENCES SHALL BE INSTALLED ALONG CONTOUR WHENEVER POSSIBLE.

Maintenance Standards Notes

1. ANY DAMAGE SHALL BE REPAIRED IMMEDIATELY.
2. IF CONCENTRATED FLOWS ARE EVIDENT UPHILL OF THE FENCE, THEY MUST BE INTERCEPTED AND CONVEYED TO A SEDIMENT TRAP OR POND.
3. IT IS IMPORTANT TO CHECK THE UPHILL SIDE OF THE FENCE FOR SIGNS OF THE FENCE CLOGGING AND ACTING AS BARRIER TO FLOW AND THEN CAUSING CHANNELIZATION OF FLOWS PARALLEL TO THE FENCE. IF THIS OCCURS, REPLACE THE FENCE AND/OR REMOVE THE TRAPPED SEDIMENT.
4. SEDIMENT MUST BE REMOVED WHEN THE SEDIMENT IS 6" HIGH.
5. IF THE FILTER FABRIC HAS DETERIORATED DUE TO ULTRAVIOLET BREAKDOWN, IT SHALL BE REPLACED.

2 / L1.2 Typical Silt Fence Installation

NOT TO SCALE

ELASTEC AmericanMarine Innovative Environmental Products

RuffWater Screen

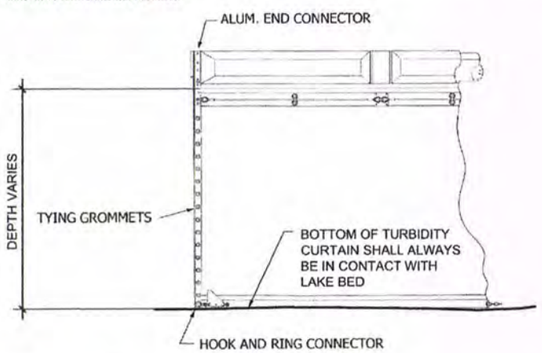

ELASTEC AmericanMarine Innovative Environmental Products

Tow Bridle With Float

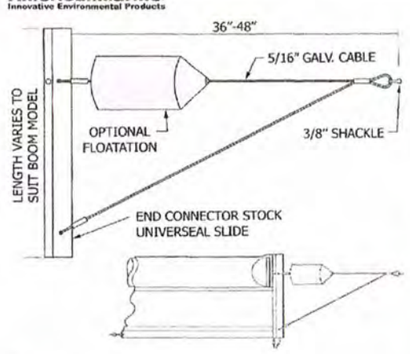

Assembled tow bridles with floats are provided for handling the containment boom or silt curtain in the water. Prior to deployment, the connector on the tow bridle should be mated to the end connector on the boom and secured with a toggle pin. The shackle on the tow bridle will accept a line up to 3/4" in diameter.

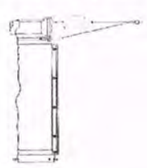

3 / L1.2 Turbidity Curtain

NOT TO SCALE

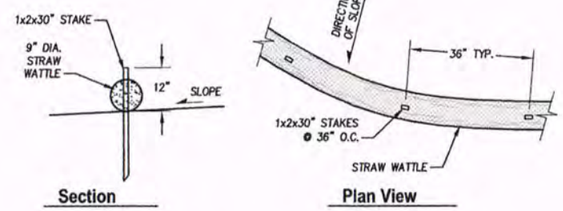

4 / L1.2 Straw Wattle

NOT TO SCALE

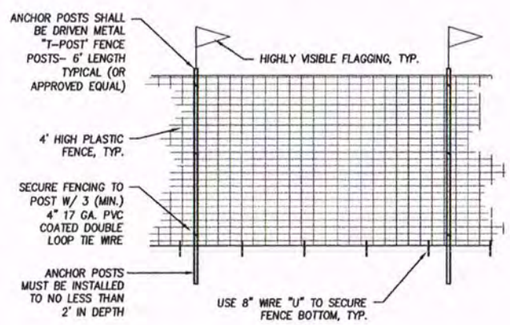

ALL TREE PROTECTION AREAS SHALL HAVE PROTECTIVE BARRIER FENCES ERECTED IN A 12' MIN. RADIUS FROM TREE TRUNK WHERE SPACE ALLOWS, OTHERWISE LOCATE AS SHOWN. THE FENCES SHALL BE HIGH-DENSITY POLYETHYLENE PLASTIC, RECTANGULAR PATTERN, AND SUPPORTED BY T-POST STEEL FENCE POSTS SPACED AT A MAXIMUM OF 8' APART. COLOR IS SAFETY ORANGE

5 / L1.2 Tree Protection Fencing

NOT TO SCALE

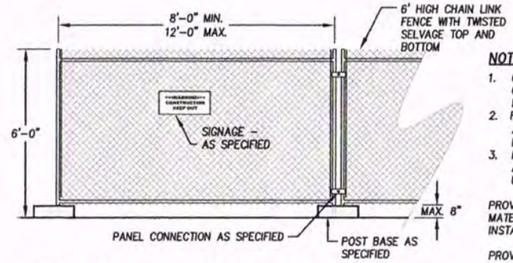

NOTES: INSTALLATION - NON-SLOPED AREAS:

1. CHAIN LINK FABRIC TO BE MIN. 11 GAUGE, GALVANIZED. NO RUSTED OR EXCESSIVELY MALFORMED FABRIC.
2. FENCE BASES SHALL BE OF SUFFICIENT WEIGHT AND/OR SPREAD TO ADEQUATELY SUPPORT EACH PANEL.
3. PANEL-TO-PANEL CONNECTIONS SHALL BE MADE AT A MINIMUM OF TWO LOCATIONS PER CONNECTION UNLESS OTHERWISE APPROVE

PROVIDE OWNER WITH SHOP DRAWINGS DESCRIBING MATERIALS & METHODS FOR SECURE, PLUMB INSTALLATIONS ON SLOPED AREAS.

PROVIDE OWNER WITH SHOP DRAWINGS DESCRIBING MATERIALS & METHODS FOR GATES/ACCESS POINTS INSTALLATIONS.

6 / L1.2 Temporary Construction Fencing

NOT TO SCALE

As-Built
7/2/21

Call 811 two business days before you dig

Harry Todd Park Waterfront Renovation

Lakewood Parks & Recreation Department
Lakewood, WA

Robert W. Droll
Landscape Architect, PS

4405 7th Avenue SE, Ste. 203
Lacey, WA 98503
(360) 456-3813
FAX (360) 493-2083
E-MAIL bob@wdroll.com

Landscape Architecture
Site Planning
Environmental Design

Urban Design
Land Planning
Project Management

STATE OF WASHINGTON ROBERT W. DROLL REG. NO. 960 EXP. 10/31/2020 LANDSCAPE ARCHITECT

PROJECT NO. 18021
DRAWING
DESIGNED BY BD
DRAWN BY BD, PM
CHECKED BY BD

REVISION

DATE	CHANGE

DATE: MARCH 23, 2020

Site Preparation & TESC Details

L1.2

D:\2018\18021 Harry Todd Park\Drawings\SHEETS\L1.2 - TESC Details.dwg
Mar-20-20 7:14pm

REVISED

LOCATION: AMERICAN LAKE, LAKEWOOD, WA
SECTION 16, TOWNSHIP 19, RANGE 02 EAST, W.M.

8929 N THORNE LANE SW, LAKEWOOD, WA 98598

PIERCE COUNTY TAX PARCEL NOS:

0219164006, 0219164053, 0219164080, 2200000021

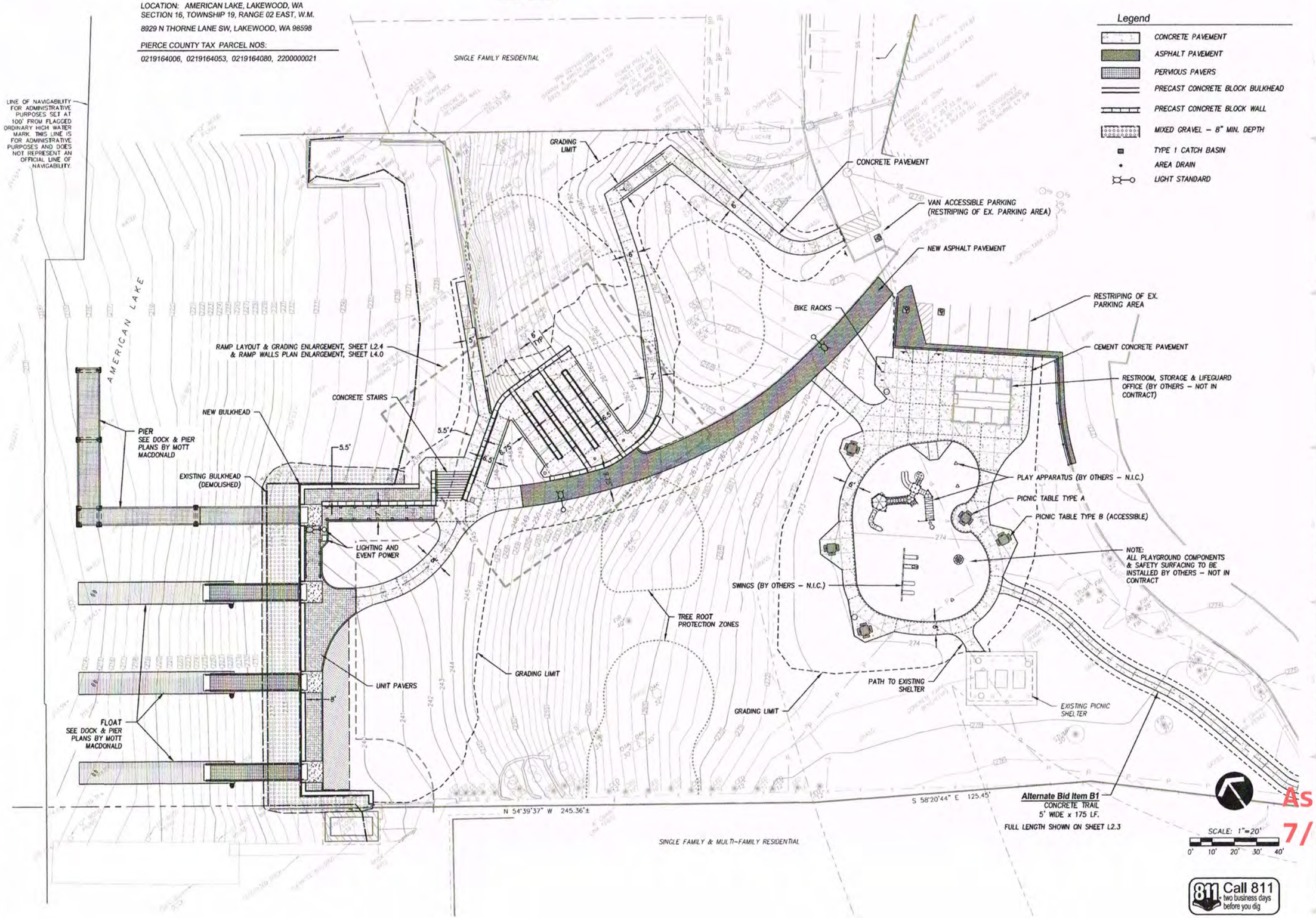

Legend

- CONCRETE PAVEMENT
- ASPHALT PAVEMENT
- PERVIOUS PAVERS
- PRECAST CONCRETE BLOCK BULKHEAD
- PRECAST CONCRETE BLOCK WALL
- MIXED GRAVEL – 8" MIN. DEPTH
- TYPE 1 CATCH BASIN
- AREA DRAIN
- LIGHT STANDARD

Harry Todd Park Waterfront Renovation

Lakewood Parks & Recreation Department
Lakewood, WA

Robert W. Droll
Landscape Architect, PS

4405 7th Avenue SE, Ste. 203
Lacey, WA 98503
(360) 456-3813
FAX (360) 493-2063
E-MAIL bob@wdroll.com

Landscape Architecture
Site Planning
Environmental Design

Urban Design
Land Planning
Project Management

STATE OF WASHINGTON ROBERT W. DROLL LANDSCAPE ARCHITECT

PROJECT NO. 18021
DRAWING
DESIGNED BY BD
DRAWN BY BD, PM
CHECKED BY BD

REVISION

DATE	CHANGE
4/22/20	ADDENDUM 2

DATE: APRIL 22, 2020

Park Site Plan

As-Built 7/2/21

L2.0

O:\2018\18021 Harry Todd Park\Drawings\SHEETS\ADDENDUM 2\07_L2.0 - Park Site Plan.dwg
Apr-22-20 1:34pm

REVISED

FLOAT
SEE DOCK & PIER PLANS BY MOTT MACDONALD

PIER
SEE DOCK & PIER PLANS BY MOTT MACDONALD

Construction Notes

1. LIGHT POLE (P3) – SEE SHEETS E0.0, E1.0 & E2.0.
2. CUSTOM CAST CONCRETE POWER BOX PER DETAIL A, SHEET E2.0. DOOR TO OPEN TOWARD LAWN.

BULKHEAD 2 (1/L5.1)
EXCAVATE SOILS REQ'D TO RELOCATE BULKHEAD
8" GRAVEL MIX LAYER (2/L7.1)
CROSS-SECTION (3/L5.1)
EXISTING ORDINARY HIGH WATER LINE AT FACE OF EXISTING BULKHEAD
BULKHEAD 3 (2/L5.1)
CROSS-SECTION (4/L7.3)
GUARDRAIL (3/L7.1) INSTALL 3" OFF-CENTER OF BULKHEAD CAP TOWARD WATER
HANDRAILS, TYP.
EXCAVATE SOILS REQ'D TO RELOCATE BULKHEAD
BULKHEAD 1 (1/L5.0)
BH 1 Railing
10" TOPSOIL TYPE A1
PAVER EDGE (5/L7.1)
UNIT PAVERS (4/L7.1)
BREAK LINE
APPROX. EXTENT OF BULKHEAD PRECAST CONC. BLOCKS
HANDRAIL AT UNIT PAVERS (3/L7.3)
EXPANSION JOINT, TYP.
CONCRETE PAVEMENT (1/L7.0)
CONTROL JOINT, TYP.
GRAVITY BLOCK WALL G PROFILE (2/L4.3)
GRAVITY BLOCK WALL H PROFILE (3/L4.3)
CONCRETE STAIRS (1/L7.1)
CONCRETE PAVEMENT THICKENED EDGE (2/L7.0) (WHERE INDICATED BY DIAGONAL HATCH)
CONCRETE PAVEMENT (1/L7.0)
APPROX. EXTENT OF BULKHEAD PRECAST CONC. BLOCKS

SCALE: 1"=10'

As-Built 7/2/21

L2.1

Call 811 two business days before you dig

Harry Todd Park Waterfront Renovation

Lakewood Parks & Recreation Department
Lakewood, WA

Robert W. Droll
Landscape Architect, PS
4405 7th Avenue SE, Ste. 203
Lacey, WA 98503
(360) 456-3813
FAX (360) 493-2063
E-MAIL bob@wdroll.com
Landscape Architecture
Site Planning
Environmental Design
Urban Design
Land Planning
Project Management

STATE OF WASHINGTON ROBERT W. DROLL LANDSCAPE ARCHITECT

PROJECT NO. 18021
DRAWING
DESIGNED BY BD
DRAWN BY BD, PM
CHECKED BY BD

REVISION

DATE	CHANGE
4/22/20	ADDENDUM 2

DATE: APRIL 22, 2020

Waterfront Layout & Grading Plan

Provided to Builders Exchange of WA, Inc. For usage Conditions Agreement see www.bxwa.com - Always Verify Scale

G:\2018\18021 Harry Todd Park\Drawings\SHEET\ADDENDUM 2\DR_L2.1 - Waterfront Layout-Grading Plan.dwg
Apr-22-20 1:38pm

REVISED

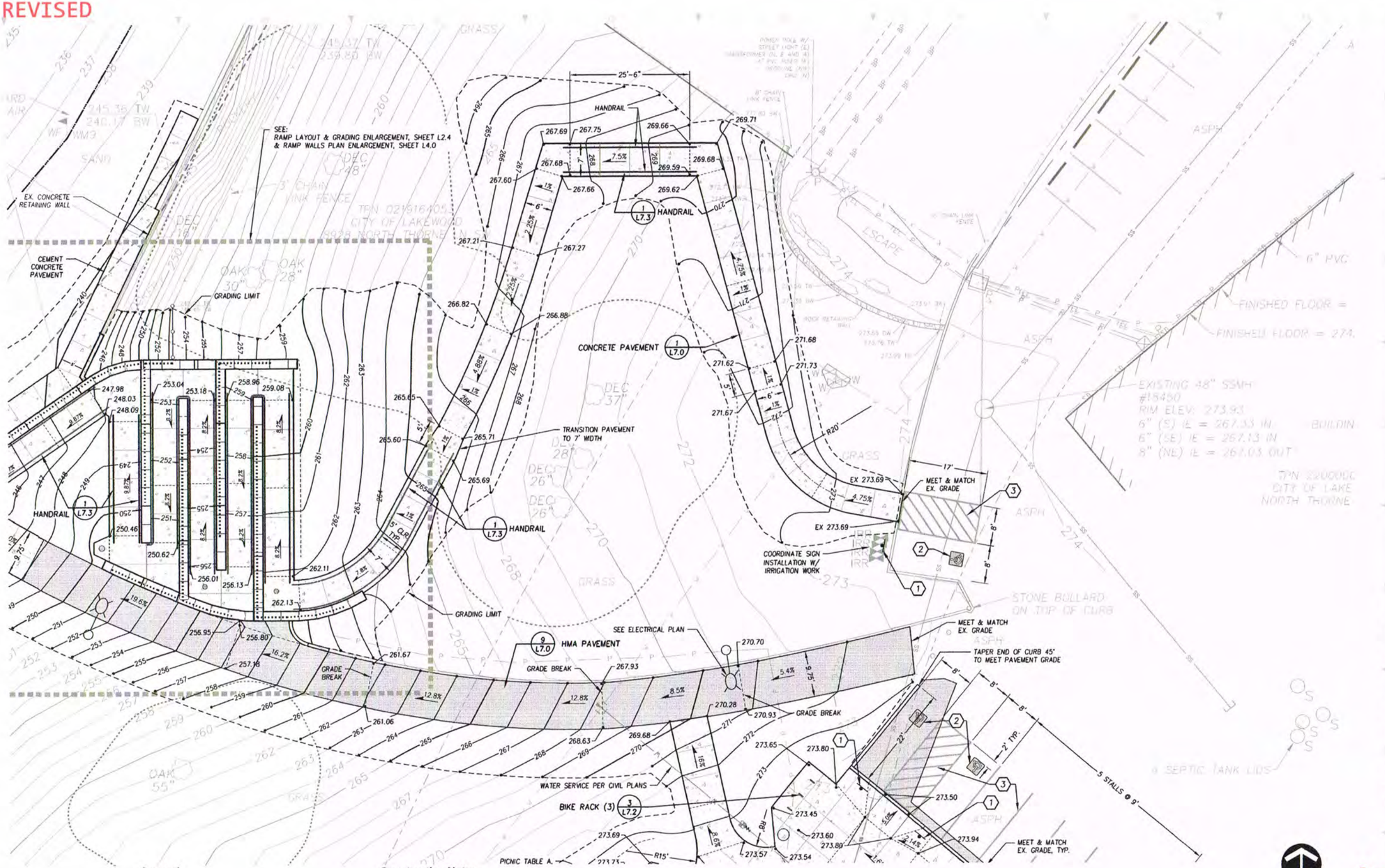

Legend

254	PROPOSED INTERMEDIATE CONTOUR
255	PROPOSED INDEX CONTOUR
	GRADE BREAK
8.2%	DIRECTION AND GRADE OF SLOPE
247.65	PROPOSED ELEVATION
	AREA DRAIN
TC 274.03	TOP OF CURB ELEVATION
SG 272.86	SUBGRADE ELEVATION
	EXPANSION JOINT (SOMETIMES GRADE BREAK)

Construction Notes

1. INSTALL SALVAGED ACCESSIBLE PARKING SIGN ON NEW STEEL POST PER CITY OF LAKEWOOD STANDARD DETAIL PS-03. INSTALL SIGN POST 2.5' BEHIND CURB, CENTERED ON PARKING STALL.
2. APPLY ACCESSIBILITY PAVEMENT MARKING PER DET. 6, SHEET L7.2.
3. 4" WHITE PAVEMENT STRIPING – DIAGONAL STRIPES IN "NO PARKING" SPACES TO BE 2' O.C. AT 45°.

SCALE: 1"=10'
0 5' 10' 15' 20'

811 Call 811 two business days before you dig

Harry Todd Park Waterfront Renovation

Lakewood Parks & Recreation Department
Lakewood, WA

Robert W. Droll
Landscape Architect, PS
4405 7th Avenue SE, Ste. 203
Lacey, WA 98503
(360) 456-3813
FAX (360) 493-2063
E-MAIL bob@wdroll.com
Landscape Architecture
Site Planning
Environmental Design
Urban Design
Land Planning
Project Management

STATE OF WASHINGTON ROBERT W. DROLL LANDSCAPE ARCHITECT

PROJECT NO.	18021
DRAWING	
DESIGNED BY	BD
DRAWN BY	BD, PM
CHECKED BY	BD

REVISION

DATE	CHANGE
4/22/20	ADDENDUM 2

DATE: APRIL 22, 2020

Upper Ramp Layout & Grading Plan

As-Built
7/2/21

L2.2

O:\2018\18021 Harry Todd Park\Drawings\SHEETS\ADDENDUM 2\09_L2.2-2.3 - Layout-Grading Plans.dwg
Apr-22-20 1:40pm

REVISED

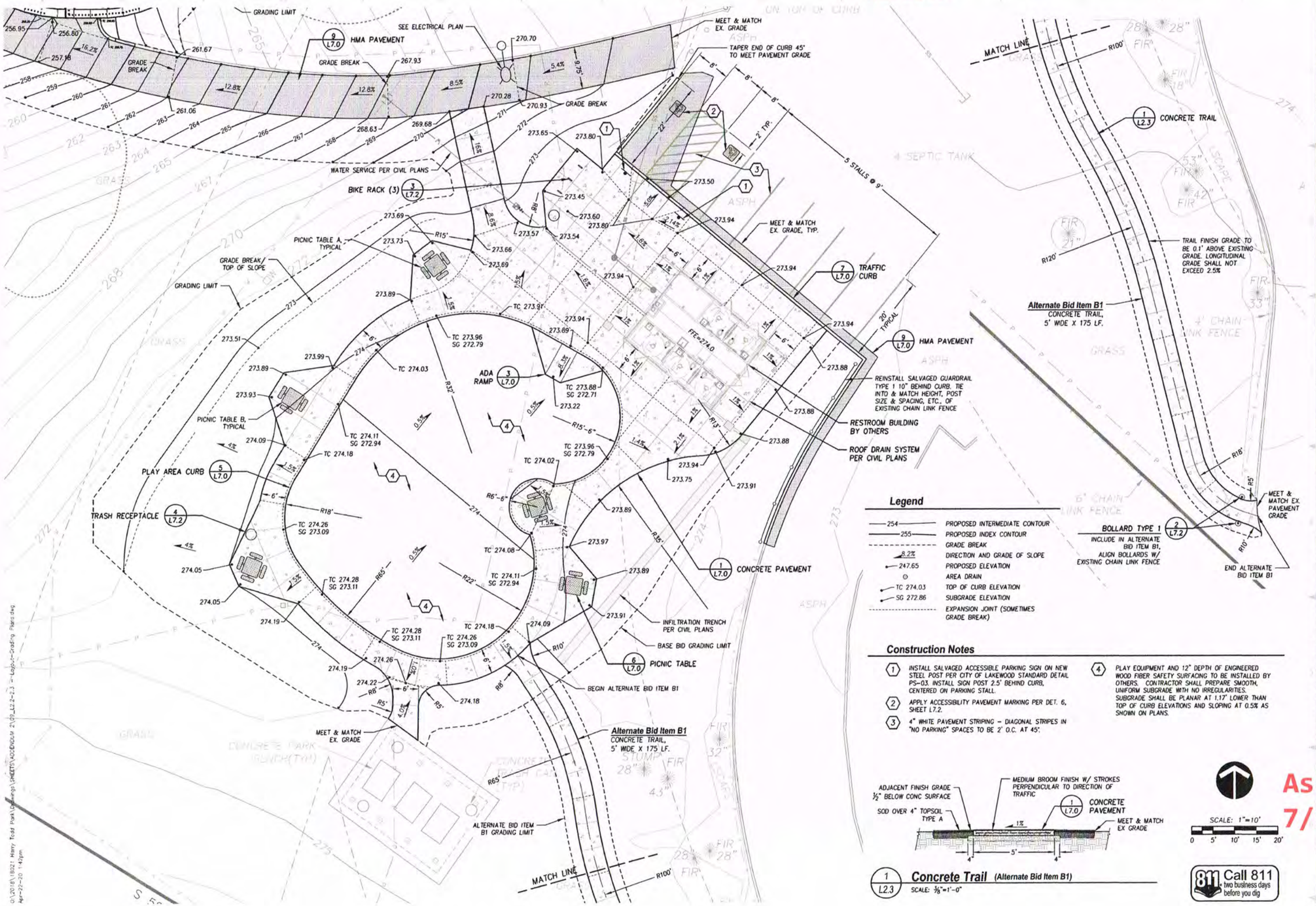

Legend

254	PROPOSED INTERMEDIATE CONTOUR
255	PROPOSED INDEX CONTOUR
	GRADE BREAK
8.2%	DIRECTION AND GRADE OF SLOPE
247.65	PROPOSED ELEVATION
⊙	AREA DRAIN
TC 274.03	TOP OF CURB ELEVATION
SG 272.86	SUBGRADE ELEVATION
	EXPANSION JOINT (SOMETIMES GRADE BREAK)

Construction Notes

1. INSTALL SALVAGED ACCESSIBLE PARKING SIGN ON NEW STEEL POST PER CITY OF LAKEWOOD STANDARD DETAIL PS-03. INSTALL SIGN POST 2.5' BEHIND CURB, CENTERED ON PARKING STALL.
2. APPLY ACCESSIBILITY PAVEMENT MARKING PER DET. 6, SHEET L7.2.
3. 4" WHITE PAVEMENT STRIPING – DIAGONAL STRIPES IN "NO PARKING" SPACES TO BE 2' O.C. AT 45°.
4. PLAY EQUIPMENT AND 12" DEPTH OF ENGINEERED WOOD FIBER SAFETY SURFACING TO BE INSTALLED BY OTHERS. CONTRACTOR SHALL PREPARE SMOOTH, UNIFORM SUBGRADE WITH NO IRREGULARITIES. SUBGRADE SHALL BE PLANAR AT 1.17' LOWER THAN TOP OF CURB ELEVATIONS AND SLOPING AT 0.5% AS SHOWN ON PLANS.

1 L2.3 **Concrete Trail** (Alternate Bid Item B1)
SCALE: ⅛"=1'-0"

SCALE: 1"=10'
0 5' 10' 15' 20'

811 Call 811 two business days before you dig

As-Built 7/2/21

Harry Todd Park Waterfront Renovation

Lakewood Parks & Recreation Department
Lakewood, WA

Robert W. Droll
Landscape Architect, PS
4405 7th Avenue SE, Ste. 203
Lacey, WA 98503
(360) 456-3813
FAX (360) 493-2083
E-MAIL bob@wdroll.com
Landscape Architecture
Site Planning
Environmental Design
Urban Design
Land Planning
Project Management

STATE OF WASHINGTON ROBERT W. DROLL LANDSCAPE ARCHITECT

PROJECT NO. 18021
DRAWING
DESIGNED BY BD
DRAWN BY BD, PM
CHECKED BY BD

REVISION

DATE	CHANGE
4/22/20	ADDENDUM 2

DATE: APRIL 22, 2020

Play Area Layout & Grading Plan

L2.3

REVISED

Grading Legend

254	PROPOSED INTERMEDIATE CONTOUR
255	PROPOSED INDEX CONTOUR
	GRADE BREAK
8.2%	DIRECTION AND GRADE OF SLOPE
247.65	PROPOSED ELEVATION
TC 259.65	PROPOSED TOP OF CURB ELEVATION
	AREA DRAIN

NOTE:
SEE SHEET L4.0 FOR RAMP WALL PLANS AND DETAIL CALLOUTS.

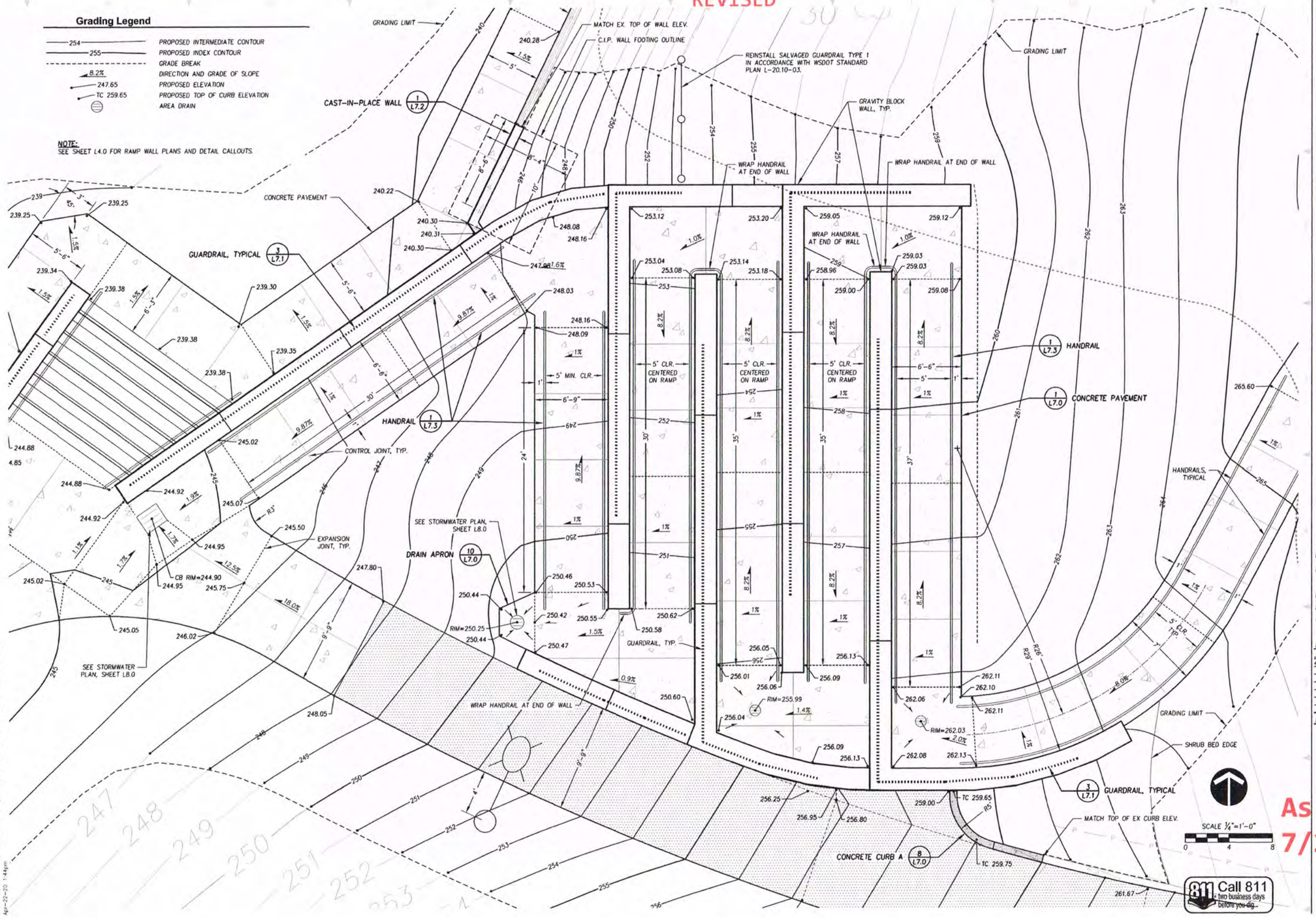

Harry Todd Park Waterfront Renovation

Lakewood Parks & Recreation Department
Lakewood, WA

Robert W. Droll
Landscape Architect, PB

4405 7th Avenue SE, Ste. 203
Lacey, WA 98503
(360) 456-3813
FAX (360) 493-2063
E-MAIL bob@wdroll.com

Landscape Architecture
Site Planning
Environmental Design

Urban Design
Land Planning
Project Management

STATE OF WASHINGTON ROBERT W. DROLL REGISTERED LANDSCAPE ARCHITECT

PROJECT NO.	18021
DRAWING	
DESIGNED BY	BD
DRAWN BY	BD, PM
CHECKED BY	BD

REVISION

DATE	CHANGE
4/22/20	ADDENDUM 2

DATE: APRIL 22, 2020

Ramp Layout & Grading Enlargement

As-Built 7/2/21

L2.4

811 Call 811 two business days before you dig.

O:\2018\18021 Harry Todd Park\Drawings\SHEETS\ADDENDUM 2\11_L2.4 - Ramp Enlargment.dwg
Apr-22-20 1:44pm

REVISED

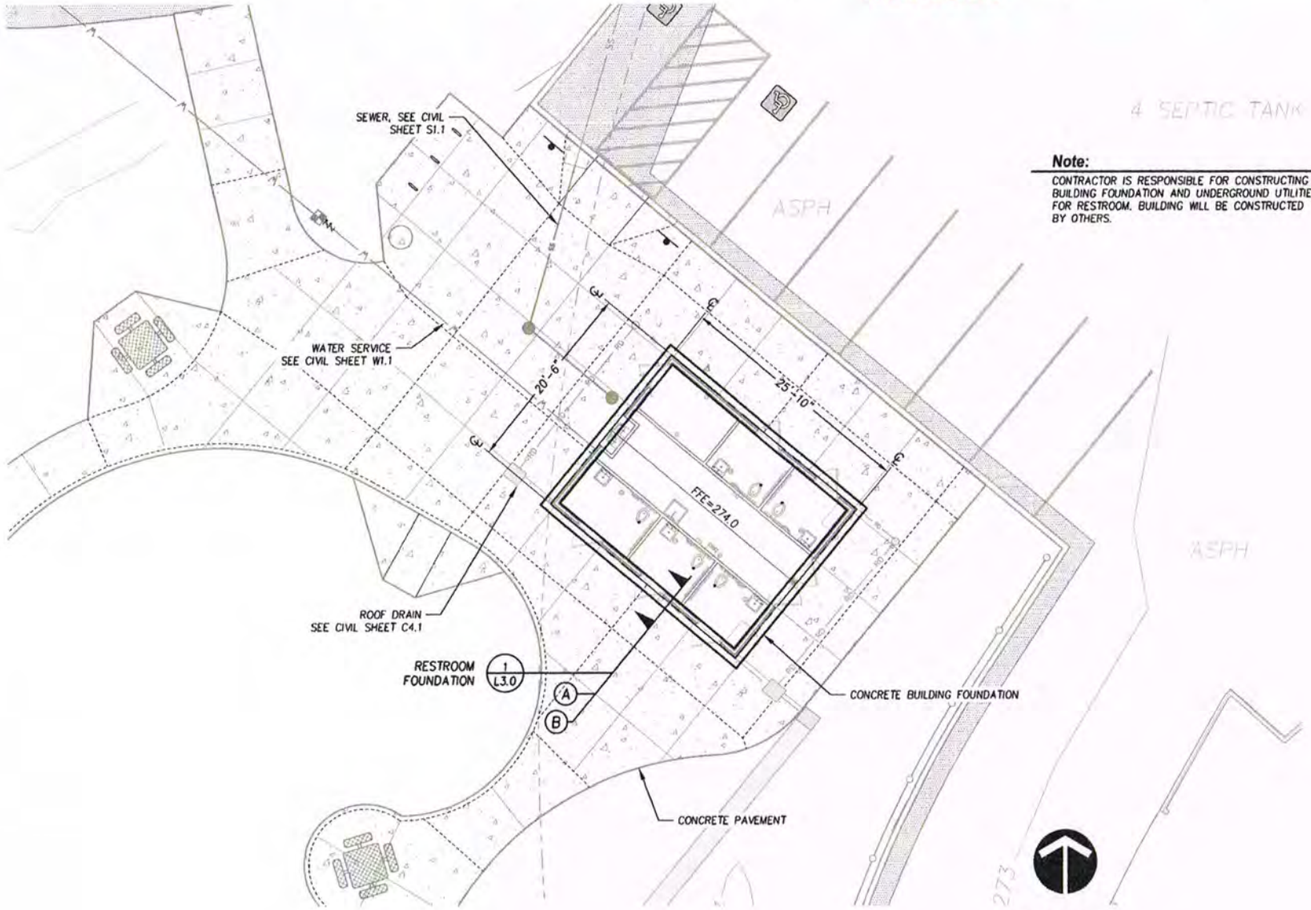

Note:
CONTRACTOR IS RESPONSIBLE FOR CONSTRUCTING BUILDING FOUNDATION AND UNDERGROUND UTILITIES FOR RESTROOM. BUILDING WILL BE CONSTRUCTED BY OTHERS.

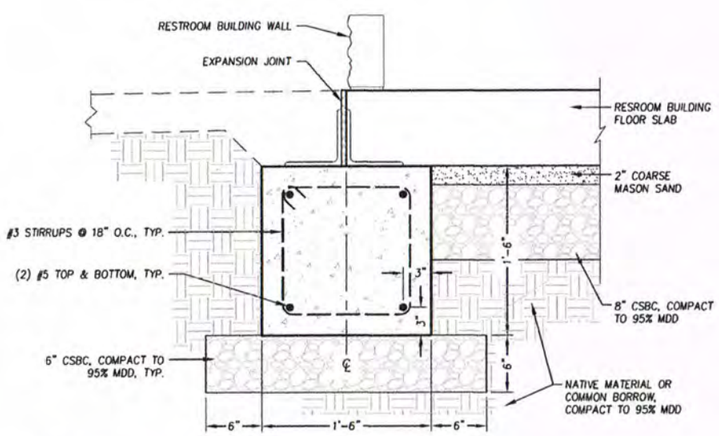

1 / L3.0 **Restroom Foundation**
SCALE: 1½"=1'-0"

Call 811 two business days before you dig

SITE CONTRACTOR NOTE:
BOTTOM OF PRE-FAB SLAB BY PRE-FAB BLDG. MANUFACTURER IS DEAD FLAT. FOOTING TOP & COMPACTED BACK FILLMUST BE DEAD LEVEL. POUR FOOTING WITH LAZER TRANSIT TO VERIFY TOP OF FOOTING. IF SHIM PLATES ARE REQUIRED A CHANGE ORDER IS REQUIRED.

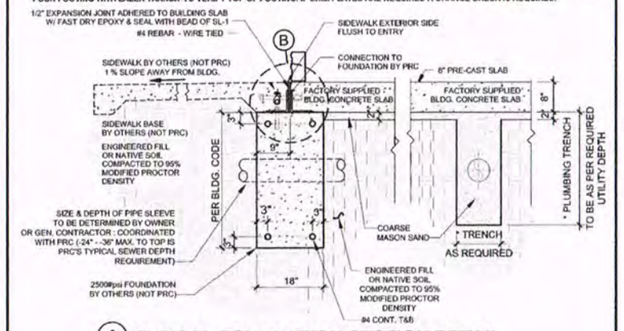

A **TYPICAL FOUNDATION SECTION DETAIL**

PUBLIC RESTROOM COMPANY — Building Better Place To Go.	BUILDING TYPE: RESTROOM / STORAGE BUILDING	DATE: 05.16.2019 · PROJECT # 10581 · DRAWN BY: KVB
	PROJECT: HARRY TODD PARK RESTROOM, LAKEWOOD, WA	MAXIMUM PERSON IN HOUR: 225 S

SITE CONTRACTOR NOTE:
BOTTOM OF PRE-FAB SLAB BUILDING MANUFACTURER IS DEAD FLAT. FOOTING TOP & COMPACTED BACKFILL MUST BE DEAD LEVEL. POUR FOOTING WITH LASER TRANSIT TO VERIFY TOP OF FOOTING. IF SHIM PLATE IS REQUIRED A CHANGE ORDER IS REQUIRED.

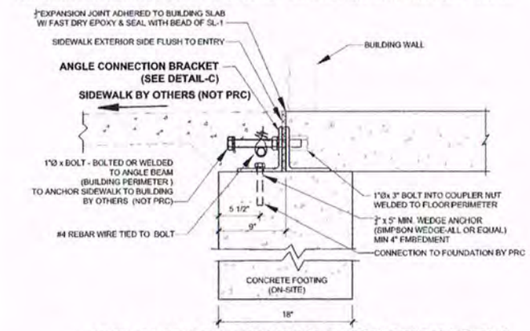

B **TYP. SLAB / FOUNDATION CONNECTION DETAIL**

SEE GENERAL SITE CONDITION LIABILITY NOTE ON " PAD PREPARATION RESPONSIBILITY" PAGE

PUBLIC RESTROOM COMPANY — Building Better Place To Go.	BUILDING TYPE: RESTROOM / STORAGE BUILDING	DATE: 05.16.2019 · PROJECT # 10581 · DRAWN BY: KVB
	PROJECT: HARRY TODD PARK RESTROOM, LAKEWOOD, WA	MAXIMUM PERSON IN HOUR: 225 S

SITE CONTRACTOR NOTE:
BOTTOM OF PRE-FAB SLAB BUILDING MANUFACTURER IS DEAD FLAT. FOOTING TOP & COMPACTED BACKFILL MUST BE DEAD LEVEL. POUR FOOTING WITH LASER TRANSIT TO VERIFY TOP OF FOOTING. IF SHIM PLATE IS REQUIRED A CHANGE ORDER IS REQUIRED.

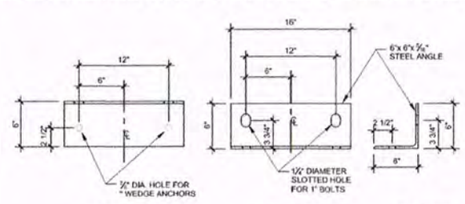

C **TYP. SLAB / FOUNDATION CONNECTION DETAIL**

SEE GENERAL SITE CONDITION LIABILITY NOTE ON " PAD PREPARATION RESPONSIBILITY" PAGE

PUBLIC RESTROOM COMPANY — Building Better Place To Go.	BUILDING TYPE: RESTROOM BUILDING	DATE · PROJECT # · DRAWN BY
	PROJECT:	MAXIMUM PERSON IN HOUR

OWNER / GENERAL CONTRACTOR AND PUBLIC RESTROOM COMPANY RESPONSIBILITIES

PRC (PUBLIC RESTROOM COMPANY)

1. PUBLIC RESTROOM COMPANY (PRC) WILL PROVIDE FULL ARCHITECTURAL PLANS AND ENGINEERING CALCULATIONS, STAMPED BY STATE GOVERNING AGENCY SUITABLE FOR GENERAL CONTRACTOR TO FILE FOR REQUIRED BUILDING PERMIT.

2. PUBLIC RESTROOM COMPANY WILL FURNISH AND INSTALL UNDERGROUND UTILITIES (UNDER SLAB) EXTENDING 6 FEET (MAX) BEYOND THE BUILDING LINE, MIN. OF 24" - MAX OF 36" BELOW GRADE.

GENERAL PAD NOTES:

1. THE DIFFERENCE IN THE ELEVATION BETWEEN THE FINISH FLOOR OF RESTROOMS AND THE SIDEWALK OUTSIDE CAN NOT BE GREATER THAN 1/4" MAX.

2. THE STRUCTURAL DESIGN DETAILS HEREIN ARE SPECIFIC TO THE BUILDING SIDE AND MODULE CONFIGURATION SHOWN ON THE FLOOR PLANS OF THESE DRAWINGS.

3. PUBLIC RESTROOM COMPANY WILL PROVIDE LOCATION OF THIS BUILDING TO MEET ALL REQUIRED PROPERTY CODE SETBACKS PER LOCAL JURISDICTION.

1. OWNER / GEN. CONTRACTOR SHALL PREPARE BUILDING PAD PER DETAILS ON THIS SHEET AND **SCOPE OF WORK.**

2. OWNER / GEN. CONTRACTOR SHALL ATTACH SITE PLAN TO THE PUBLIC RESTROOM COMPANY'S DEPARTMENT OF HOUSING APPROVED DOCUMENTS AND FILE BUILDING PERMIT FOR PLUMBING PERMIT/INSPECTION UNDER BUILDING SLAB.

3. OWNER / GEN. CONTRACTOR TO COORDINATE SEWER INVERT WITH THE PUBLIC RESTROOM COMPANY PRIOR TO BUILDING INSTALLATION, VERIFY & COORDINATE LOCATION OF EXISTING UTILITIES INCLUDING WATER METER SIZE, TYPE, AND LOCATION OF EXISTING UTILITIES COMING INTO THE BUILDING SUPPLIED BY PRC.

4. OWNER / GEN. CONTRACTOR IS RESPONSIBLE FOR UTILITY CONNECTIONS AND WILL MAKE FINAL CONNECTIONS TO SEWER, WATER AND POWER.

5. OWNER / GEN. CONTRACTOR TO PREPARE SITE FOR MINIMUM ALLOWABLE SOIL BEARING PRESSURE OF 1,500psf WITH SUB-GRADE COMPACTED TO 95% MDD.

6. OWNER / GEN. CONTRACTOR TO SUPPLY AND STOCK PILE REQUIRED QUANTITY OF COARSE SAND WITHIN BUILDING PROXIMITY FOR USE BY PRC. (ELEVATION OF BASE TO BE DETERMINED AND VERIFIED BY THE GENERAL CONTRACTOR) PAD ELEVATION MUST BE LEVEL WITHIN 2% (+/-) AND COMPLY WITH ALL PERMISSIBLE CODES OF ACCESSIBILITY AND SAFETY. BEFORE BUILDING SET WET SAND FILL TO CONSOLIDATE AND / OR VIBRATE.

7. PROJECTS WITH FOOTINGS: OWNER / GEN. CONTRACTOR MUST PROVIDE SLEEVES IN FOOTINGS ACCORDING TO UTILITY LOCATION PLAN, AND PAD / FOUNDATION PLAN DIRECTION.

GENERAL SITE CONDITION LIABILITY NOTE:

PUBLIC RESTROOM COMPANY (PRC) PROVIDES BUILDING PAD PLAN DRAWINGS FOR PLACEMENT OF OUR BUILDING ON SITE PADS FOR **REFERENCE ONLY**. PRC DRAWINGS DO NOT INCORPORATE SITE DESIGN FOR LOCAL CODES, SOILS CONDITIONS, FOOTING REQUIREMENTS, AND OR ANY OTHER CONTRIBUTING SITE FACTORS UP TO AN INCLUDING HIGH WATER TABLES. IT IS THE RESPONSIBILITY OF THE OWNER OR GENERAL CONTRACTOR TO PROVIDE A PROPER SITE DESIGN TO ACCOMMODATE THE BUILDING AS WELL AS PROVIDE PROPER SITE CRITERIA SO PRC MAY MODEL SEWER, WATER AND ELECTRICAL DESIGNS WITHIN THE BUILDING. OUR BUILDING DESIGN INCLUDES AN 6" THICK REINFORCED CONCRETE SLAB AND ASSUMES FULL SLAB BEARING ON SOIL S WITH A MINIMUM OF 1500 PSF BEARING CAPACITY. OUR BUILDING DESIGNS SURCHARGE THE SOIL BENEATH THE MAT SLAB AT APPROXIMATE 208 PSF. ANY BUILDING FOUNDATION IN ADDITION TO THE INTEGRAL MAT SLAB ARE SHOWN FOR **REFERENCE ONLY** AND SHOULD BE VERIFIED BY A LICENSED SOILS ENGINEER TO CONFORM WITH REQUIRED CODES. **PRC ASSUMES NO LIABILITY FOR THE OWNER OR GENERAL CONTRACTOR ACCEPTANCE OF THESE TYPICAL DRAWINGS WITHOUT VERIFICATION BY A LICENSED SOILS / FOUNDATION ENGINEER.**

PUBLIC RESTROOM COMPANY — Building Better Place To Go.	BUILDING TYPE: RESTROOM BUILDING	DATE · PROJECT # · DRAWN BY
	PROJECT:	MAXIMUM PERSON IN HOUR

Harry Todd Park Waterfront Renovation

Lakewood Parks & Recreation Department
Lakewood, WA

Robert W. Droll
Landscape Architect, PS
4405 7th Avenue SE, Ste. 203
Lacey, WA 98503
(360) 456-3813
FAX (360) 493-2063
E-MAIL bob@rwdroll.com
Landscape Architecture
Site Planning
Environmental Design
Urban Design
Land Planning
Project Management

STATE OF WASHINGTON — ROBERT W. DROLL — LANDSCAPE ARCHITECT

PROJECT NO. 18021
DRAWING
DESIGNED BY BD
DRAWN BY BD, PM
CHECKED BY BD

REVISION

DATE	CHANGE
4/22/20	ADDENDUM 2

DATE: APRIL 22, 2020

Restroom Building Layout & Details

As-Built 7/2/21

L3.0

O:\2018\18021 Harry Todd Park\Drawings\SHEETS\ADDENDUM 2\L3.0 - Restroom Bldg.dwg
Apr-22-20 1:48pm

REVISED

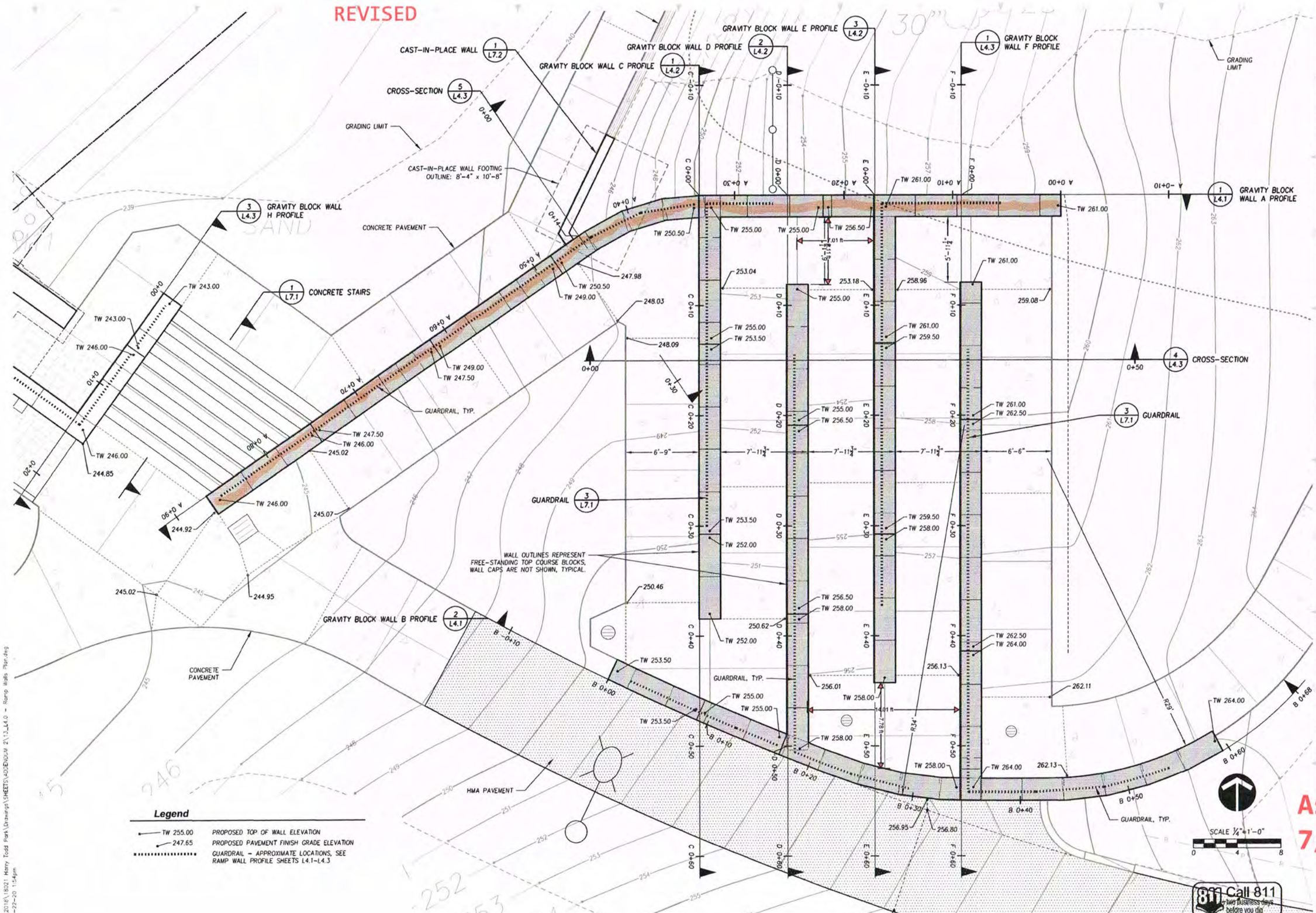

Legend

TW 255.00	PROPOSED TOP OF WALL ELEVATION
247.65	PROPOSED PAVEMENT FINISH GRADE ELEVATION
.....	GUARDRAIL - APPROXIMATE LOCATIONS, SEE RAMP WALL PROFILE SHEETS L4.1-L4.3

Harry Todd Park Waterfront Renovation

Lakewood Parks & Recreation Department
Lakewood, WA

Robert W. Droll
Landscape Architect, PS
4405 7th Avenue SE, Ste. 203
Lacey, WA 98503
(360) 456-3813
FAX (360) 493-2063
E-MAIL bob@wdroll.com
Landscape Architecture
Site Planning
Environmental Design
Urban Design
Land Planning
Project Management

STATE OF WASHINGTON ROBERT W. DROLL NO. 530 EXP. 6/30/2020 LANDSCAPE ARCHITECT

PROJECT NO. 18021
DRAWING
DESIGNED BY BD
DRAWN BY BD, PM
CHECKED BY BD

REVISION

DATE	CHANGE
4/22/20	ADDENDUM 2

DATE: APRIL 22, 2020

Ramp Walls Plan

As-Built
7/2/21

L4.0

811 Call 811 two business days before you dig

O:\2018\18021 Harry Todd Park\Drawings\SHEETS\ADDENDUM 2\13_L4.0 - Ramp Walls Plan.dwg
Apr-22-20 1:54pm

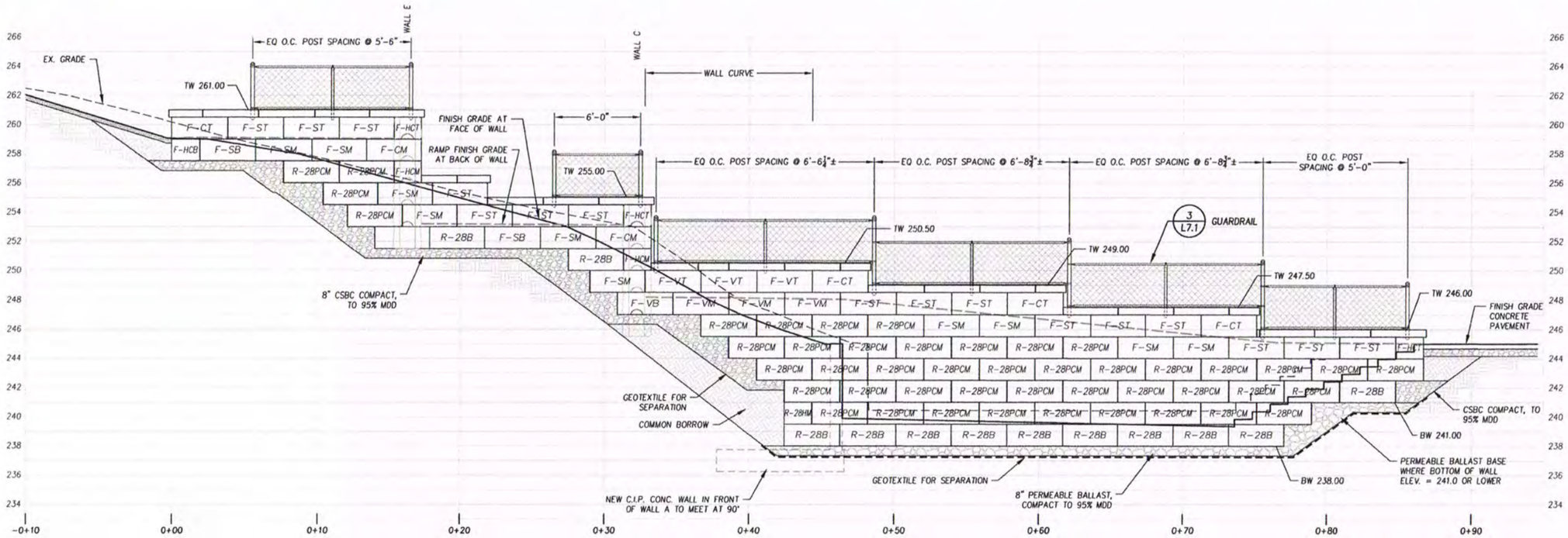

1 / L4.1 Gravity Block Wall A Profile

SCALE: 1"=4'-0"

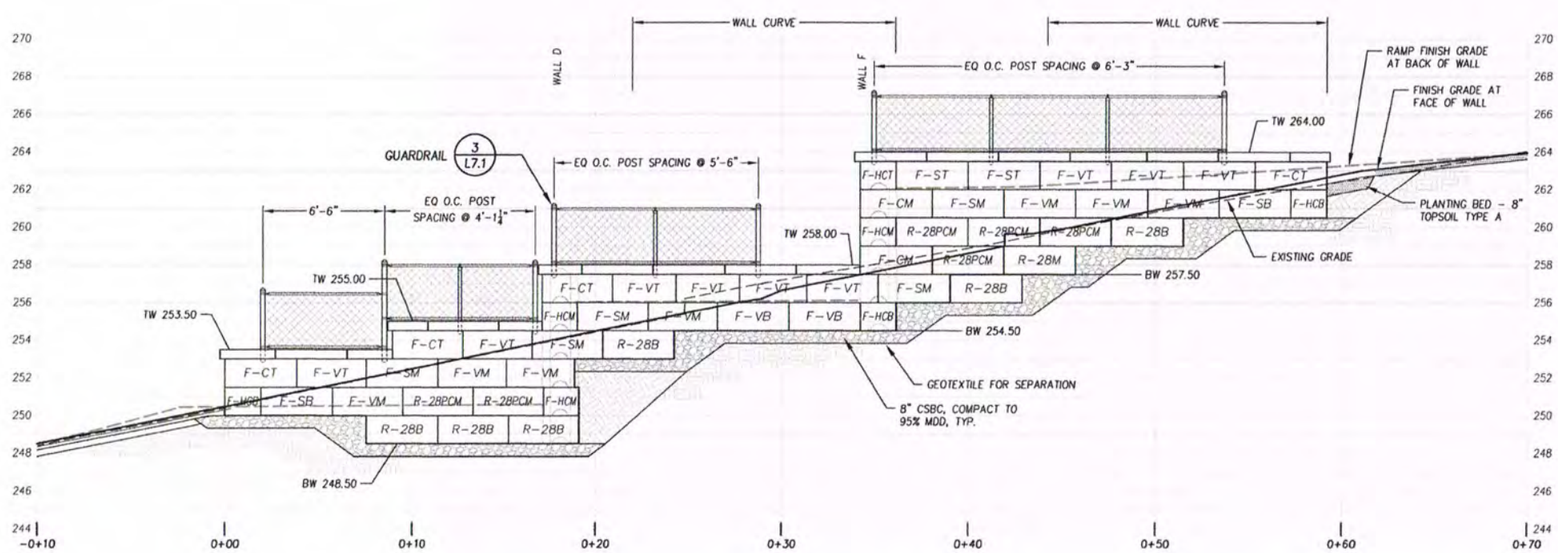

2 / L4.1 Gravity Block Wall B Profile

SCALE: 1"=4'-0"

Notes

1. LETTER CODES ON PRECAST CONCRETE WALL BLOCKS REFERENCE BLOCKS AS MANUFACTURED BY REDI-ROCK INTERNATIONAL.
2. SPECIFY A 1" BATTER WHEN ORDERING BLOCK UNITS FOR RAMP WALLS. SPECIFY A 5" BATTER WHEN ORDERING BLOCK UNITSFOR BULKHEAD.
3. SAW-CUTTING OF SOME BLOCKS IS REQUIRED. CUT BLOCKS LABELED F-VT & F-VM PER MANUFACTURER'S DIRECTION TO ACHIEVE WALL CURVES.
4. INSTALL GEOGRID STRIPS IN ALL PRECAST BLOCKS CODED R-28PCM. REFER TO DETAIL 5, SHEET L4.3, & PROJECT SPECIFICATIONS.

Custom Block Schedule

THE FOLLOWING BLOCKS ARE SPECIAL ORDER PRODUCTS AND ARE INCORPORATED IN BULKHEAD 1. ALL SPECIAL ORDER BLOCKS ARE FREESTANDING TYPE WITH CUSTOM WIDTHS.

BLOCK CODE	CUSTOM WIDTH
F-ST-33	33"
R-ST-35	35"
R-SM-35	35"
R-ST-43	43"
R-SM-43	43"

Harry Todd Park Waterfront Renovation

Lakewood Parks & Recreation Department
Lakewood, WA

Robert W. Droll
Landscape Architect, PS

4405 7th Avenue SE, Ste. 203
Lacey, WA 98503
(360) 456-3813
FAX (360) 493-2063
E-MAIL bob@wdroll.com

Landscape Architecture
Site Planning
Environmental Design

Urban Design
Land Planning
Project Management

STATE OF WASHINGTON ROBERT W. DROLL EXP. 6/30/2020 LANDSCAPE ARCHITECT

PROJECT NO. 18021
DRAWING
DESIGNED BY BD
DRAWN BY BD, PM
CHECKED BY BD

REVISION

DATE	CHANGE

DATE: MARCH 19, 2020

Ramp Walls Profiles

As-Built 7/2/21

L4.1

STATE OF WASHINGTON MICHAEL SZRAMEK 20890 REGISTERED PROFESSIONAL ENGINEER

03-19-20

SCALE ¼"=1'-0"
0 4 8

811 Call 811 two business days before you dig

O:\2018\18021 Harry Todd Park\Drawings\SHEETS\L4.1-4.3 - Ramp Walls Profiles.dwg
Mar-19-20 1:11pm

Provided to Builders Exchange of WA, Inc. For usage Conditions Agreement see www.bxwa.com. Always Verify Scale

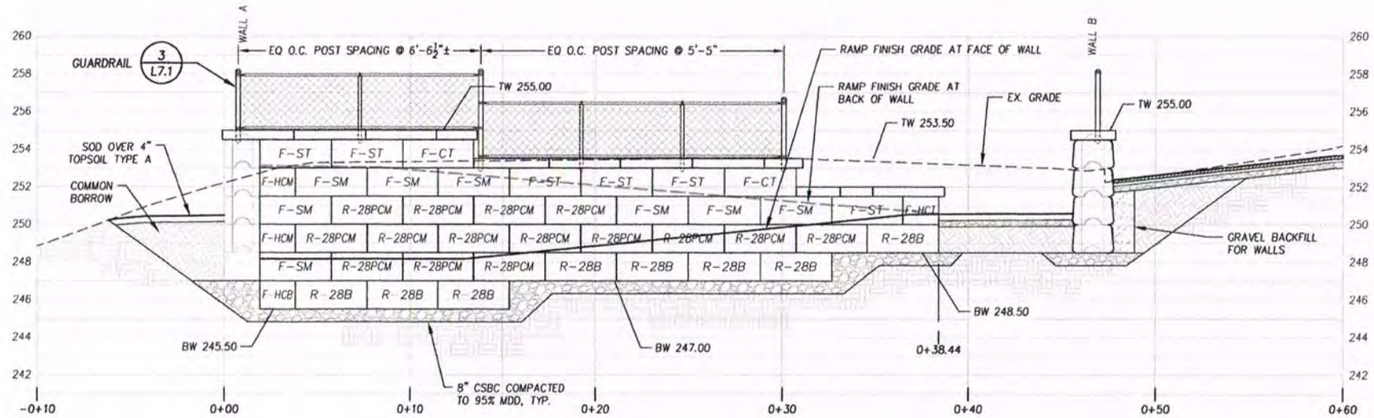

1 / L4.2 Gravity Block Wall C Profile

SCALE: 1"=4'-0"

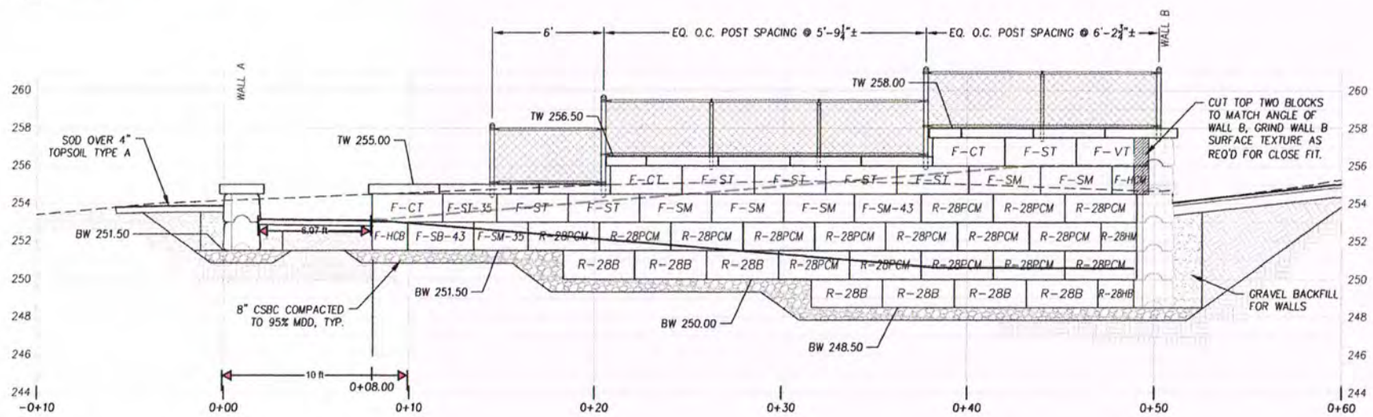

2 / L4.2 Gravity Block Wall D Profile

SCALE: 1"=4'-0"

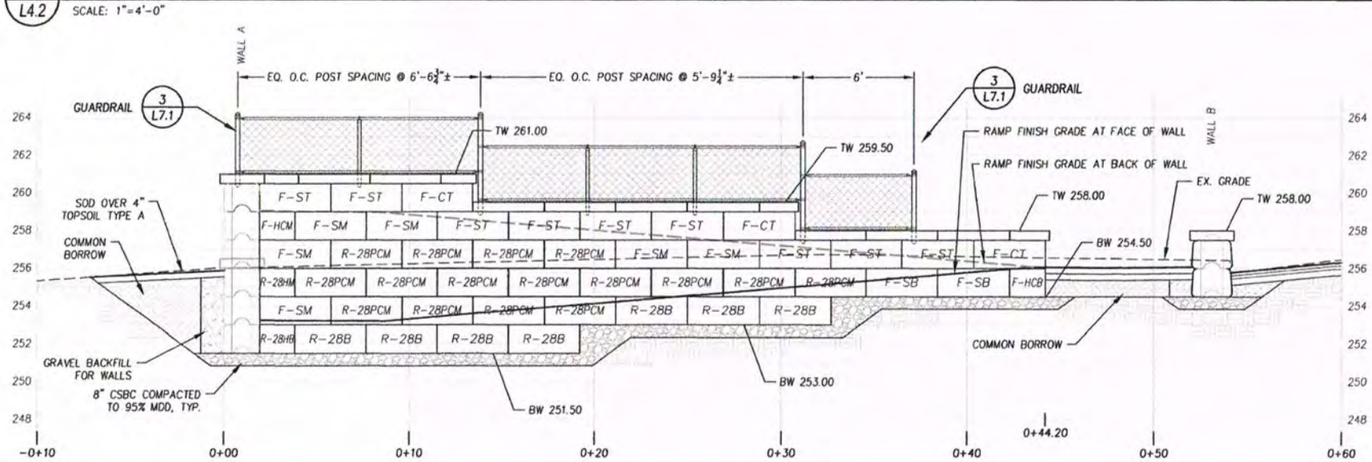

3 / L4.2 Gravity Block Wall E Profile

SCALE: 1"=4'-0"

Notes

1. LETTER CODES ON PRECAST CONCRETE WALL BLOCKS REFERENCE BLOCKS AS MANUFACTURED BY REDI-ROCK INTERNATIONAL.
2. SPECIFY A 1" BATTER WHEN ORDERING BLOCK UNITS FOR RAMP WALLS. SPECIFY A 5" BATTER WHEN ORDERING BLOCK UNITSFOR BULKHEAD.
3. SAW-CUTTING OF SOME BLOCKS IS REQUIRED. CUT BLOCKS LABELED F-VT & F-VM PER MANUFACTURER'S DIRECTION TO ACHIEVE WALL CURVES.
4. INSTALL GEOGRID STRIPS IN ALL PRECAST BLOCKS CODED R-28PCM. REFER TO DETAIL 5, SHEET L4.3, & PROJECT SPECIFICATIONS.

Custom Block Schedule

THE FOLLOWING BLOCKS ARE SPECIAL ORDER PRODUCTS AND ARE INCORPORATED IN BULKHEAD 1. ALL SPECIAL ORDER BLOCKS ARE FREESTANDING TYPE WITH CUSTOM WIDTHS.

BLOCK CODE	CUSTOM WIDTH
F-ST-33	33"
R-ST-35	35"
R-SM-35	35"
R-ST-43	43"
R-SM-43	43"

Harry Todd Park Waterfront Renovation

Lakewood Parks & Recreation Department
Lakewood, WA

Robert W. Droll
Landscape Architect, PS

4405 7th Avenue SE, Ste. 203
Lacey, WA 98503
(360) 456-3813
FAX (360) 493-2063
E-MAIL bob@wdrol.com

Landscape Architecture
Site Planning
Environmental Design

Urban Design
Land Planning
Project Management

STATE OF WASHINGTON ROBERT W. DROLL REGISTERED LANDSCAPE ARCHITECT EXP. 5/30/2020

PROJECT NO. 18021
DRAWING
DESIGNED BY BD
DRAWN BY BD, PM
CHECKED BY BD

REVISION

DATE	CHANGE

DATE: MARCH 19, 2020

AS-Built
7/2/21

STATE OF WASHINGTON MICHAEL SZRAMEK 20860 REGISTERED PROFESSIONAL ENGINEER

03-19-20

SCALE ¼"=1'-0"
0 4 8

811 Call 811 two business days before you dig

Ramp Walls Profiles

L4.2

O:\2018\18021 Harry Todd Park\Drawings\SHEETS\L4.1-4.3 - Ramp Walls Profiles.dwg
Mar-19-20 1:12pm

Provided to Builders Exchange of WA, Inc. For usage Conditions Agreement see www.bxwa.com. Always Verify Scale

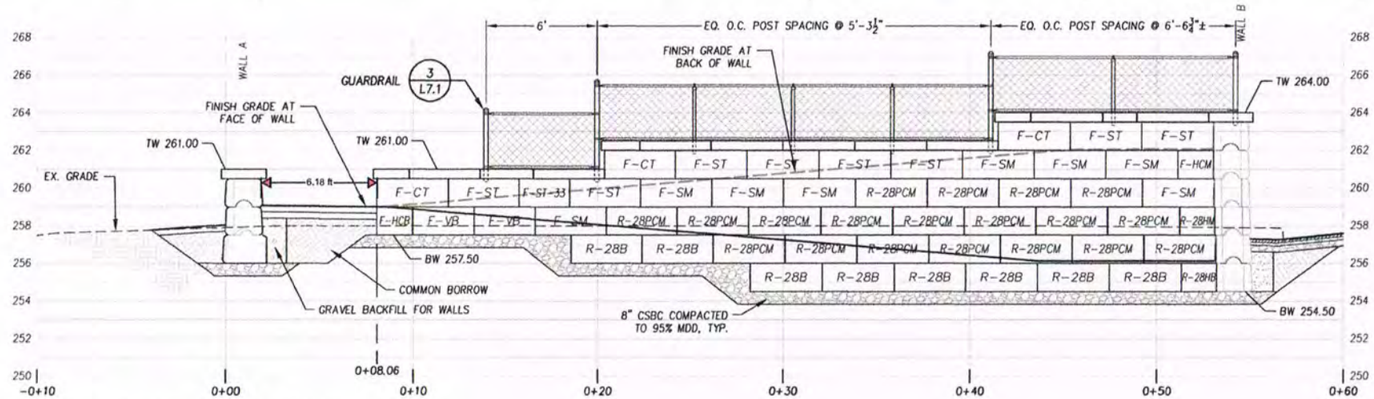

1 / L4.3 Gravity Block Wall F Profile

SCALE: 1"=4'-0"

Notes

1. LETTER CODES ON PRECAST CONCRETE WALL BLOCKS REFERENCE BLOCKS AS MANUFACTURED BY REDI-ROCK INTERNATIONAL.
2. SPECIFY A 1" BATTER WHEN ORDERING BLOCK UNITS FOR RAMP WALLS. SPECIFY A 5" BATTER WHEN ORDERING BLOCK UNITSFOR BULKHEAD.
3. SAW-CUTTING OF SOME BLOCKS IS REQUIRED. CUT BLOCKS LABELED F-VT & F-VM PER MANUFACTURER'S DIRECTION TO ACHIEVE WALL CURVES.
4. INSTALL GEOGRID STRIPS IN ALL PRECAST BLOCKS CODED R-28PCM. REFER TO DETAIL 5, SHEET L4.3, & PROJECT SPECIFICATIONS.

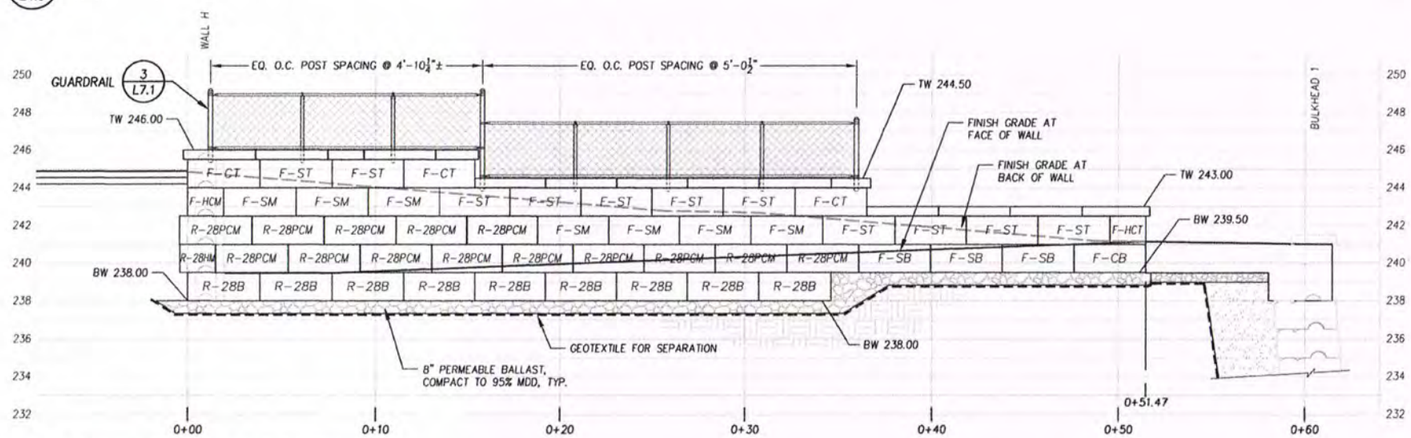

2 / L4.3 Gravity Block Wall G Profile

SCALE: 1"=4'-0"

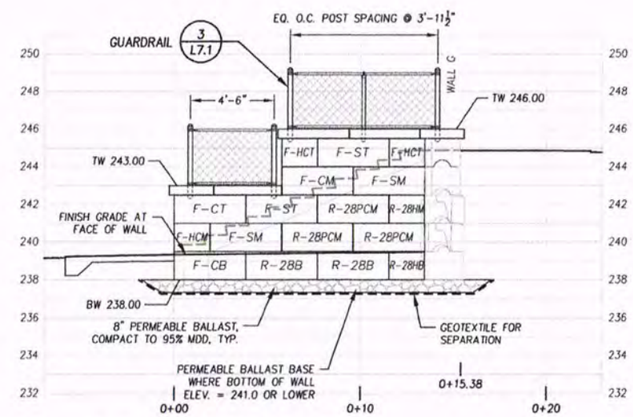

3 / L4.3 Gravity Block Wall H Profile

SCALE: 1"=4'-0"

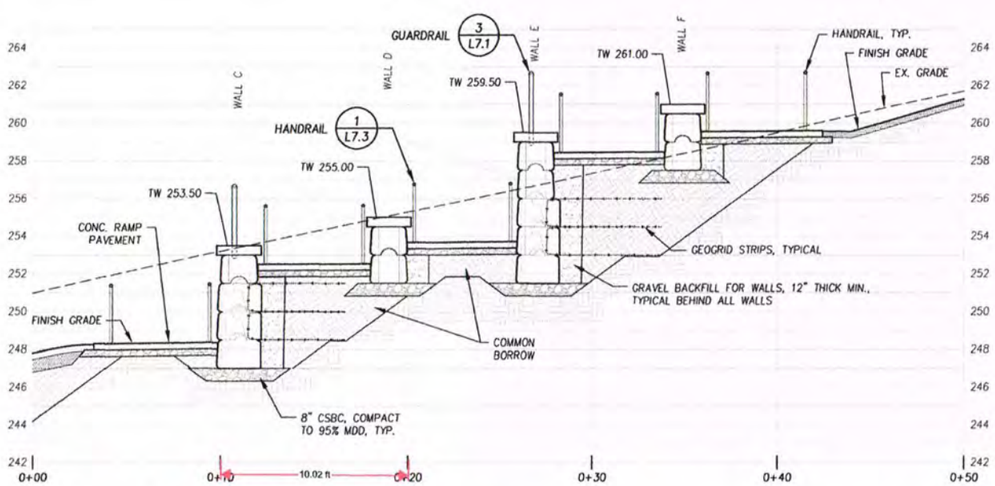

4 / L4.3 Cross Section

SCALE: 1"=4'-0"

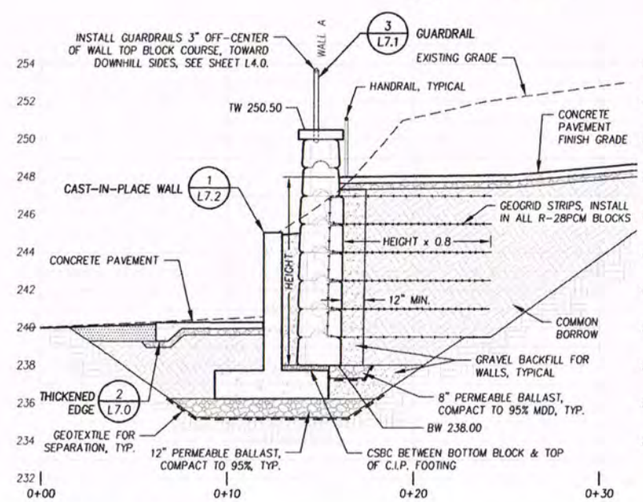

5 / L4.3 Cross Section

SCALE: 1"=4'-0"

Custom Block Schedule

THE FOLLOWING BLOCKS ARE SPECIAL ORDER PRODUCTS AND ARE INCORPORATED IN BULKHEAD 1. ALL SPECIAL ORDER BLOCKS ARE FREESTANDING TYPE WITH CUSTOM WIDTHS.

BLOCK CODE	CUSTOM WIDTH
F-ST-33	33"
R-ST-35	35"
R-SM-35	35"
R-ST-43	43"
R-SM-43	43"

As-Built 7/2/21

MICHAEL SZRAMEK — STATE OF WASHINGTON — 20800 — REGISTERED PROFESSIONAL ENGINEER

03-19-20

SCALE: ¼"=1'-0"

0 4 8

Call 811 two business days before you dig

Harry Todd Park Waterfront Renovation

Lakewood Parks & Recreation Department
Lakewood, WA

Robert W. Droll
Landscape Architect, PS

4405 7th Avenue SE, Ste. 203
Lacey, WA 98503
(360) 456-3813
FAX (360) 493-2063
E-MAIL bob@wdroll.com

Landscape Architecture
Site Planning
Environmental Design

Urban Design
Land Planning
Project Management

STATE OF WASHINGTON — ROBERT W. DROLL — REGISTERED LANDSCAPE ARCHITECT — EXP. 6/30/2020

PROJECT NO. 18021
DRAWING
DESIGNED BY BD
DRAWN BY BD, PM
CHECKED BY BD

REVISION

DATE	CHANGE

DATE: MARCH 19, 2020

Ramp Walls Profiles

L4.3

O:\2018\18021 Harry Todd Park\Drawings\SHEETS\L4.1-4.3 - Ramp Walls Profiles.dwg
Mar-19-20 1:55pm

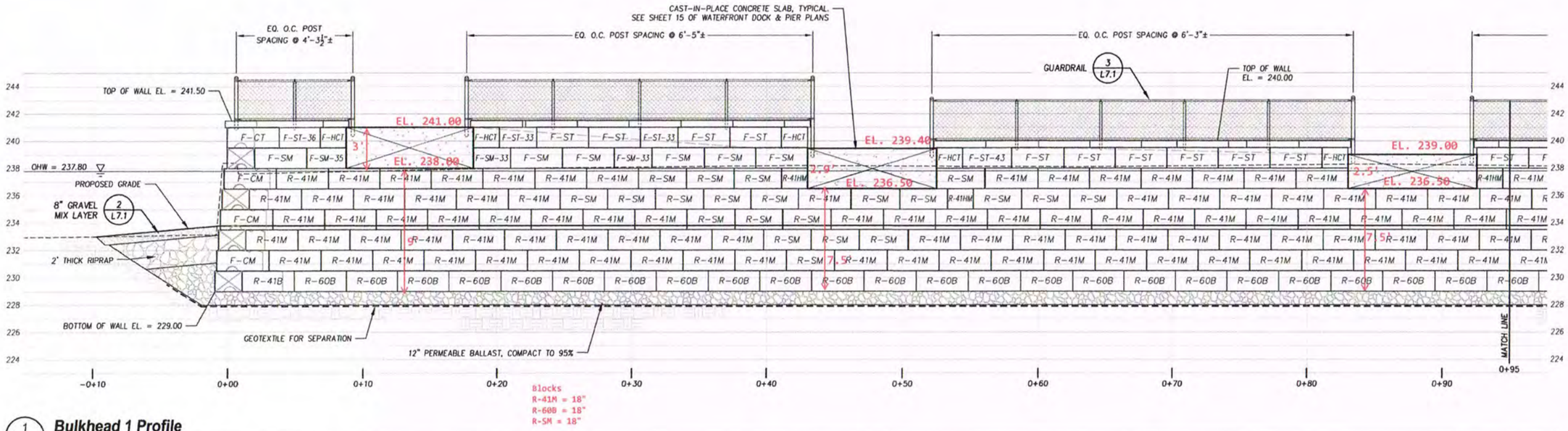

1 L5.0 **Bulkhead 1 Profile**

SCALE: 1"=4'-0"

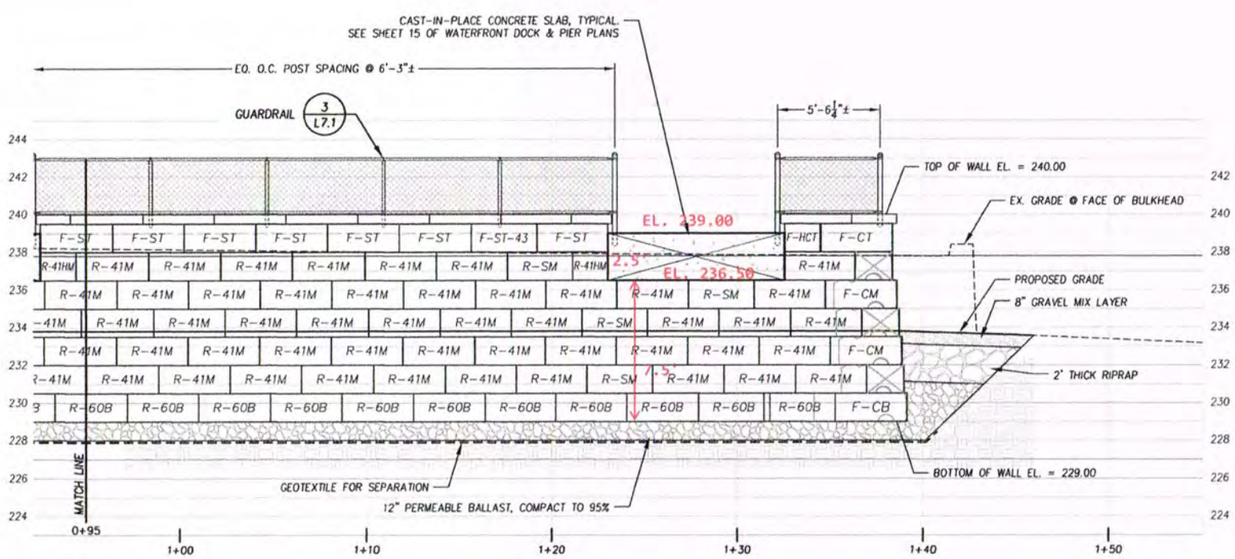

2 L5.0 **Bulkhead 1 Profile (continued)**

SCALE: 1"=4'-0"

Notes

1. LETTER CODES ON PRECAST CONCRETE WALL BLOCKS REFERENCE BLOCKS AS MANUFACTURED BY REDI-ROCK INTERNATIONAL.
2. PRECAST BLOCK UNITS FOR THE BULKHEAD SHALL HAVE A 5° BATTER.
3. ADJOINING WALL BLOCKS SHOWN MARKED WITH "X" REPRESENT INTERLOCKING BLOCKS IN WALL PERPENDICULAR TO PROFILE WALL (TYPICAL).

Custom Block Schedule

THE FOLLOWING BLOCKS ARE SPECIAL ORDER PRODUCTS AND ARE INCORPORATED IN BULKHEAD 1. ALL SPECIAL ORDER BLOCKS ARE FREESTANDING TYPE WITH CUSTOM WIDTHS.

BLOCK CODE	CUSTOM WIDTH
F-ST-33	33"
F-ST-36	36"
R-ST-43	43"
R-SM-33	33"
R-SM-35	35"

As-Built
7/2/21

Call 811 two business days before you dig

Harry Todd Park Waterfront Renovation

Lakewood Parks & Recreation Department
Lakewood, WA

Robert W. Droll
Landscape Architect, PS

4405 7th Avenue SE, Ste. 203
Lacey, WA 98503
(360) 456-3813
FAX (360) 493-2063
E-MAIL bob@w-d.net.com

Landscape Architecture
Site Planning
Environmental Design

Urban Design
Land Planning
Project Management

STATE OF WASHINGTON ROBERT W. DROLL NO. 936 EXP. 6/20/2020 LANDSCAPE ARCHITECT

PROJECT NO. 18021
DRAWING
DESIGNED BY BD
DRAWN BY BD, PM
CHECKED BY BD

REVISION

DATE	CHANGE

DATE: MARCH 23, 2020

Bulkhead Profiles

L5.0

O:\2018\18021 Harry Todd Park\Drawings\SHEETS\17_L5.0-5.1 - Bulkhead Profiles.dwg
Mar 20-20 8:34am

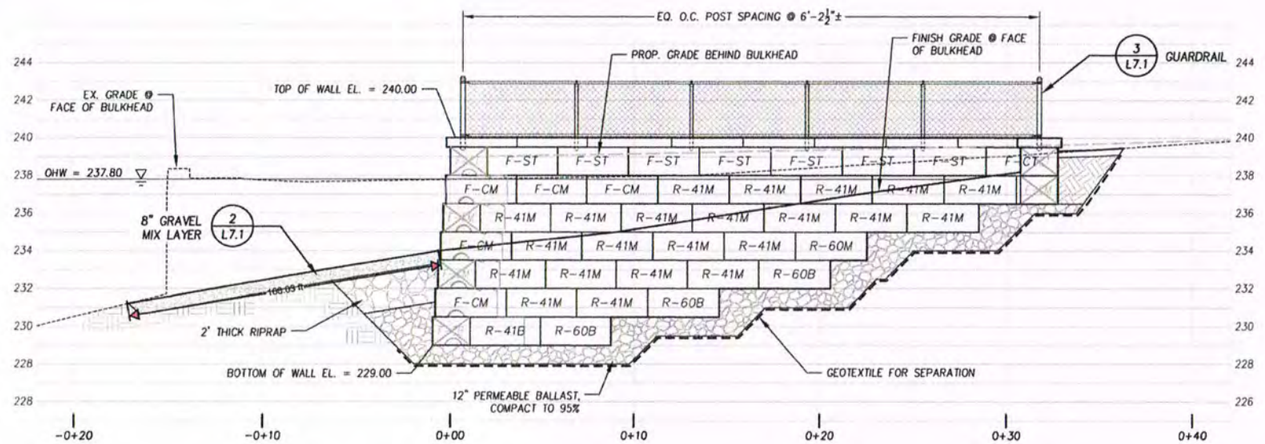

1 L5.1 **Bulkhead 2 Profile**

SCALE: 1"=4'-0"

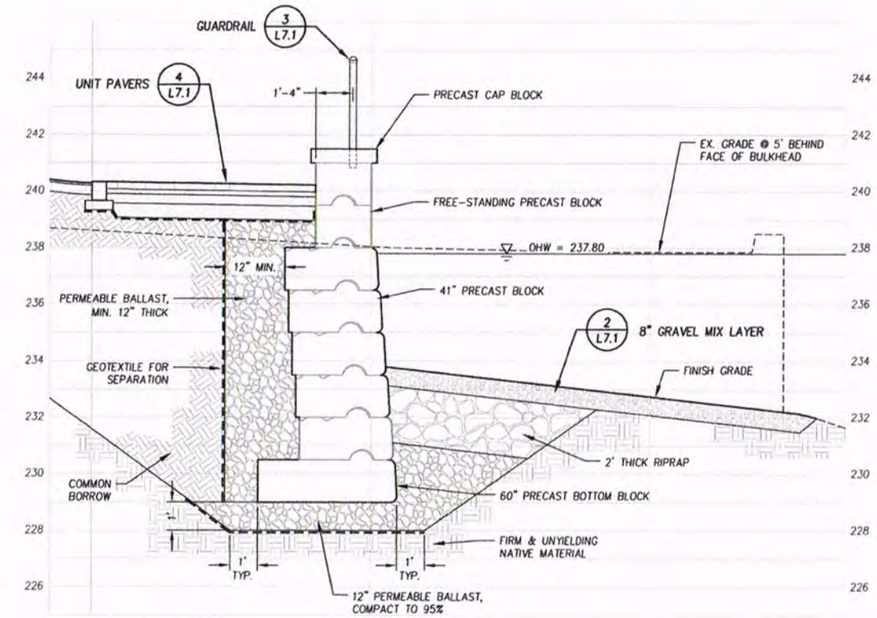

3 L5.1 **Bulkhead Cross-section**

SCALE: ⅜"=1'-0"

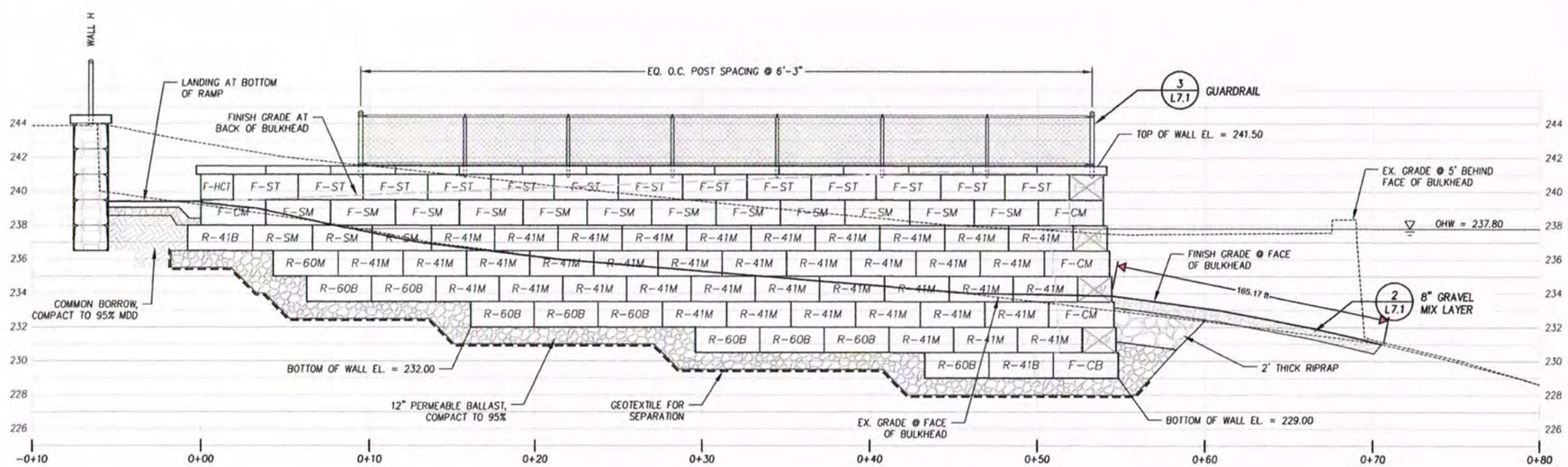

2 L5.1 **Bulkhead 3 Profile**

SCALE: 1"=4'-0"

Notes

1. LETTER CODES ON PRECAST CONCRETE WALL BLOCKS REFERENCE BLOCKS AS MANUFACTURED BY REDI-ROCK INTERNATIONAL.
2. PRECAST BLOCK UNITS FOR THE BULKHEAD SHALL HAVE A 5° BATTER.
3. ADJOINING WALL BLOCKS SHOWN MARKED WITH "X" REPRESENT INTERLOCKING BLOCKS IN WALL PERPENDICULAR TO PROFILE WALL (TYPICAL).

As-Built
7/2/21

3/23/20

Call 811 two business days before you dig

Harry Todd Park Waterfront Renovation

Lakewood Parks & Recreation Department
Lakewood, WA

Robert W. Droll
Landscape Architect, PS

4405 7th Avenue SE, Ste. 203
Lacey, WA 98503
(360) 456-3813
FAX (360) 493-2063
E-MAIL bob@redroll.com

Landscape Architecture
Site Planning
Environmental Design

Urban Design
Land Planning
Project Management

STATE OF WASHINGTON ROBERT W. DROLL LICENSED LANDSCAPE ARCHITECT

PROJECT NO.	18021
DRAWING	
DESIGNED BY	BD
DRAWN BY	BD, PM
CHECKED BY	BD

REVISION

DATE	CHANGE

DATE: MARCH 23, 2020

Bulkhead Profiles

L5.1

Q:\2018\18021 Harry Todd Park\Drawings\SHEETS\17_L5.0-5.1 - Bulkhead Profiles.dwg
Mar-23-20 12:04pm

Provided to Builders Exchange of WA, Inc. For usage Conditions Agreement see www.bxwa.com - Always Verify Scale

R-28HM 28" HALF MIDDLE

R-28HM 28" (710mm) HALF MIDDLE

Face Texture:	Cobble / Limestone	Kingstone / Ledgestone
Block Weight:	750 lb (340 kg)	710 lb (320 kg)
Block Volume:	5.23 ft³ (0.148 m³)	4.98 ft³ (0.141 m³)
Center of Gravity:	14.3" (364 mm)	13.8" (350 mm)

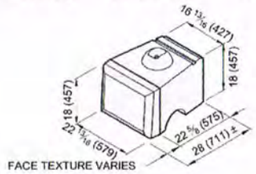

R-28B 28" BOTTOM

R-28B 28" (710mm) BOTTOM

Face Texture:	Cobble / Limestone	Kingstone / Ledgestone
Block Weight:	1740 lb (790 kg)	1670 lb (760 kg)
Block Volume:	12.19 ft³ (0.345 m³)	11.70 ft³ (0.331 m³)
Center of Gravity:	14.0" (355 mm)	13.5" (343 mm)

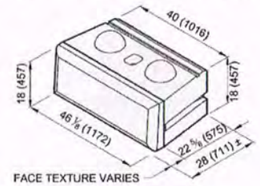

R-28HB 28" HALF BOTTOM

R-28HB 28" (710mm) HALF BOTTOM

Face Texture:	Cobble / Limestone	Kingstone / Ledgestone
Block Weight:	810 lb (370 kg)	770 lb (350 kg)
Block Volume:	5.66 ft³ (0.160 m³)	5.41 ft³ (0.153 m³)
Center of Gravity:	14.3" (364 mm)	13.8" (352 mm)

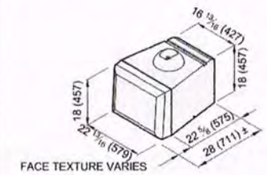

A-3SC TWO-SIDED

A-3SC THREE-SIDED

Block Weight:	660 lb (300 kg)
Block Volume:	4.59 ft³ (0.130 m³)

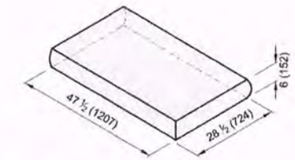

A-2SC TWO-SIDED

A-2SC TWO-SIDED

Block Weight:	630 lb (290 kg)
Block Volume:	4.42 ft³ (0.125 m³)

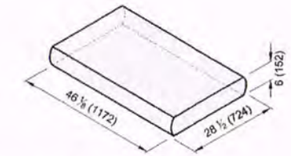

R-28PCM 28" PC MIDDLE

R-28PCM 28" (710mm) PC MIDDLE

Face Texture:	Cobble / Limestone	Kingstone / Ledgestone
Block Weight:	1520 lb (690 kg)	1450 lb (660 kg)
Block Volume:	10.62 ft³ (0.301 m³)	10.12 ft³ (0.287 m³)
Center of Gravity:	14.2" (360 mm)	13.6" (346 mm)

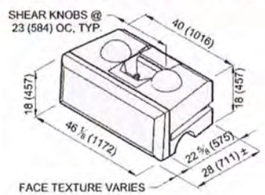

R-60M 60" MIDDLE

R-60M 60" (1520mm) MIDDLE

Face Texture:	Cobble / Limestone	Kingstone / Ledgestone
Block Weight:	3290 lb (1490 kg)	3220 lb (1460 kg)
Block Volume:	23.00 ft³ (0.651 m³)	22.49 ft³ (0.637 m³)
Center of Gravity:	31.0" (786 mm)	30.4" (772 mm)

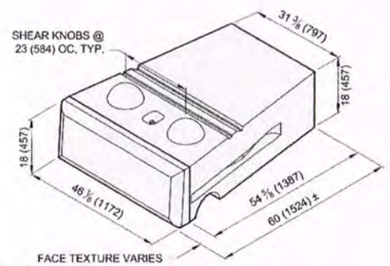

R-60B 60" BOTTOM

R-60B 60" (1520mm) BOTTOM

Face Texture:	Cobble / Limestone	Kingstone / Ledgestone
Block Weight:	3420 lb (1550 kg)	3350 lb (1520 kg)
Block Volume:	23.90 ft³ (0.677 m³)	23.40 ft³ (0.663 m³)
Center of Gravity:	31.6" (802 mm)	31.0" (788 mm)

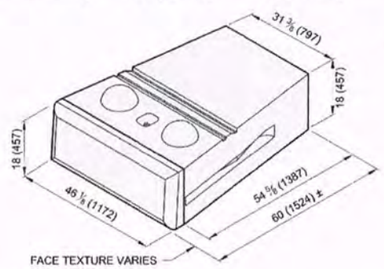

F-VB VARIABLE RADIUS BOTTOM

F-VB VARIABLE RADIUS BOTTOM

Face Texture:	Cobble / Limestone	Kingstone / Ledgestone
Block Weight:	1380 lb (630 kg)	1240 lb (560 kg)
Block Volume:	9.65 ft³ (0.273 m³)	8.66 ft³ (0.245 m³)

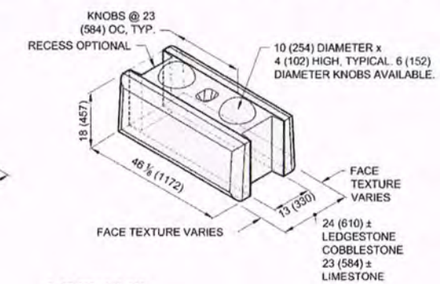

F-HCB HALF CORNER BOTTOM

F-HCB HALF CORNER BOTTOM

Face Texture:	Cobble / Limestone	Kingstone / Ledgesto
Block Weight:	710 lb (320 kg)	700 lb (320 kg)
Block Volume:	5.0 ft³ (0.14m³)	4.9 ft³ (0.14m³)

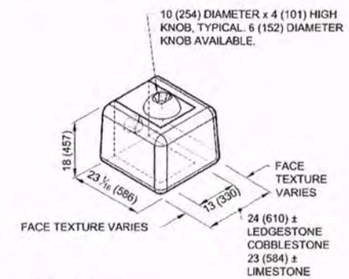

F-CM CORNER MIDDLE

F-CM CORNER MIDDLE

Face Texture:	Cobble / Limestone	Kingstone / Ledgestone
Block Weight:	1370 lb (620 kg)	1360 lb (620 kg)
Block Volume:	9.6 ft³ (0.27m³)	9.5 ft³ (0.27m³)

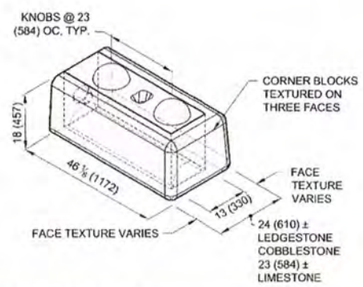

F-CT CORNER TOP

F-CT CORNER TOP

Face Texture:	Cobble / Limestone	Kingstone / Ledgestone
Block Weight:	1340 lb (610 kg)	1330 lb (600 kg)
Block Volume:	9.4 ft³ (0.26m³)	9.3 ft³ (0.26m³)

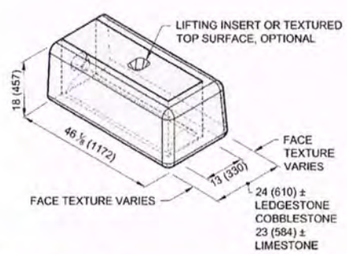

F-SM STRAIGHT MIDDLE

F-SM STRAIGHT MIDDLE

Face Texture:	Cobble / Limestone	Kingstone / Ledgestone
Block Weight:	1410 lb (640 kg)	1260 lb (570 kg)
Block Volume:	9.84 ft³ (0.279 m³)	8.84 ft³ (0.250 m³)

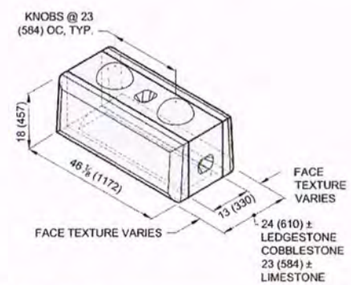

F-ST STRAIGHT TOP

F-ST STRAIGHT TOP

Face Texture:	Cobble / Limestone	Kingstone / Ledgestone
Block Weight:	1380 lb (620 kg)	1230 lb (560 kg)
Block Volume:	9.61 ft³ (0.272 m³)	8.62 ft³ (0.244 m³)

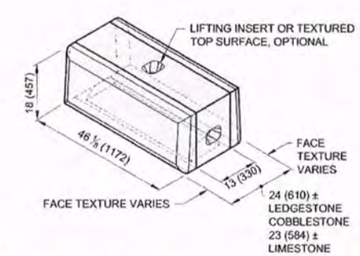

F-HCM HALF CORNER MIDDLE

F-HCM HALF CORNER MIDDLE

Face Texture:	Cobble / Limestone	Kingstone / Ledgestone
Block Weight:	660 lb (300 kg)	650 lb (300 kg)
Block Volume:	4.6 ft³ (0.13m³)	4.6 ft³ (0.13m³)

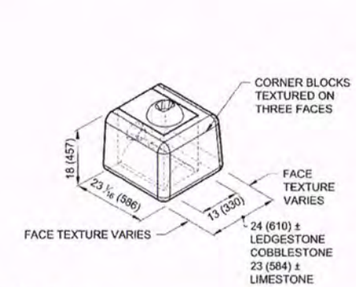

F-VM VARIABLE RADIUS MIDDLE

F-VM VARIABLE RADIUS MIDDLE

Face Texture:	Cobble / Limestone	Kingstone / Ledgestone
Block Weight:	1270 lb (570 kg)	1120 lb (510 kg)
Block Volume:	8.86 ft³ (0.251 m³)	7.86 ft³ (0.223 m³)

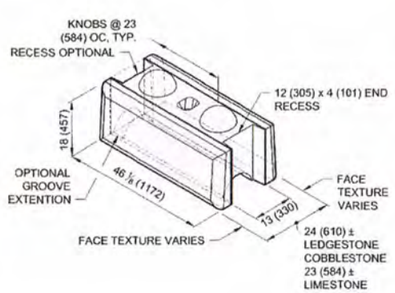

F-VT VARIABLE RADIUS TOP

F-VT VARIABLE RADIUS TOP

Face Texture:	Cobble / Limestone	Kingstone / Ledgestone
Block Weight:	1240 lb (560 kg)	1090 lb (500 kg)
Block Volume:	8.63 ft³ (0.244 m³)	7.64 ft³ (0.216 m³)

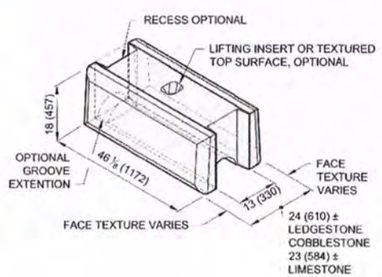

F-CB CORNER BOTTOM

F-CB CORNER BOTTOM

Face Texture:	Cobble / Limestone	Kingstone / Ledgestone
Block Weight:	1490 lb (680 kg)	1480 lb (670 kg)
Block Volume:	10.4 ft³ (0.30m³)	10.3 ft³ (0.29m³)

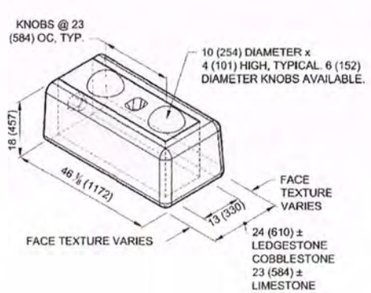

F-SB STRAIGHT BOTTOM

F-SB STRAIGHT BOTTOM

Face Texture:	Cobble / Limestone	Kingstone / Ledgestone
Block Weight:	1520 lb (690 kg)	1380 lb (630 kg)
Block Volume:	10.65 ft³ (0.302 m³)	9.66 ft³ (0.273 m³)

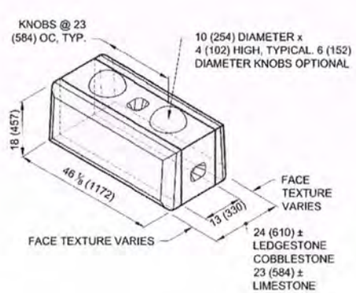

F-HCT HALF CORNER TOP

F-HCT HALF CORNER TOP

Face Texture:	Cobble / Limestone	Kingstone / Ledgestone
Block Weight:	640 lb (290 kg)	630 lb (290 kg)
Block Volume:	4.5 ft³ (0.13m³)	4.4 ft³ (0.13m³)

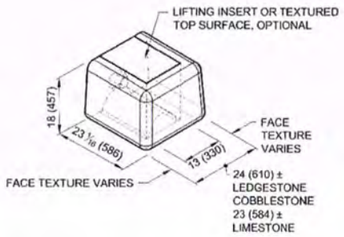

As-Built
7/2/21

Harry Todd Park Waterfront Renovation

Lakewood Parks & Recreation Department
Lakewood, WA

Robert W. Droll
Landscape Architects, PS

4405 7th Avenue SE, Ste. 203
Lacey, WA 98503
(360) 456-3813
FAX (360) 493-2063
E-MAIL bob@wdroll.com

Landscape Architecture
Site Planning
Environmental Design

Urban Design
Land Planning
Project Management

STATE OF WASHINGTON
ROBERT W. DROLL
EXP. 6/26/2020
LANDSCAPE ARCHITECT

PROJECT NO. 18021
DRAWING
DESIGNED BY BD
DRAWN BY BD, PM
CHECKED BY BD

REVISION

DATE	CHANGE

DATE: MARCH 23, 2020

Wall Blocks

L6.0

Q:\2018\18021 Harry Todd Park\Drawings\SHEETS\19_L6.0-6.2 - Wall Details.dwg
Mar-20-20 8:13pm

R-41B 41" BOTTOM

R-41B 41" (1030mm) BOTTOM

	Cobble / Limestone	Kingstone / Ledgestone
Face Texture:	Cobble / Limestone	Kingstone / Ledgestone
Block Weight:	2440 lb (1110 kg)	2370 lb (1070 kg)
Block Volume:	17.06 ft³ (0.483 m³)	16.56 ft³ (0.469 m³)
Center of Gravity:	20.7" (527 mm)	20.2" (514 mm)

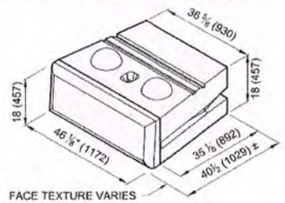

R-SM SHORT MIDDLE

R-SM SHORT MIDDLE

	Cobble / Limestone	Kingstone / Ledgestone
Face Texture:	Cobble / Limestone	Kingstone / Ledgestone
Block Weight:	2140 lb (970 kg)	2080 lb (940 kg)
Block Volume:	14.95 ft³ (0.42 m³)	14.51 ft³ (0.41 m³)
Center of Gravity:	19.7" (499mm)	19.2" (487mm)

SHEAR KNOBS @ 23 (584) OC, TYP.

SPECIALITY BLOCK

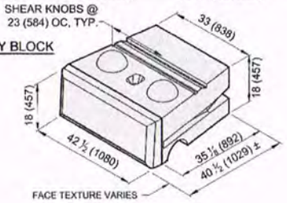

R-41HB 41" HALF BOTTOM

R-41HB 41" (1030mm) HALF BOTTOM

	Cobble / Limestone	Kingstone / Ledgestone
Face Texture:	Cobble / Limestone	Kingstone / Ledgestone
Block Weight:	1080 lb (490 kg)	1050 lb (480 kg)
Block Volume:	7.58 ft³ (0.21 m³)	7.33 ft³ (0.21 m³)
Center of Gravity:	21.7" (551 mm)	21.2" (538 mm)

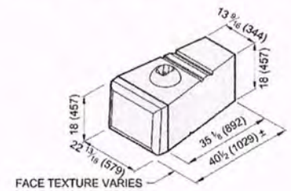

R-41M 41" MIDDLE

R-41M 41" (1030mm) MIDDLE

	Cobble / Limestone	Kingstone / Ledgestone
Face Texture:	Cobble / Limestone	Kingstone / Ledgestone
Block Weight:	2310 lb (1050 kg)	2240 lb (1020 kg)
Block Volume:	16.14 ft³ (0.457 m³)	15.65 ft³ (0.443 m³)
Center of Gravity:	20.4" (518 mm)	19.8" (504 mm)

SHEAR KNOBS @ 23 (584) OC, TYP.

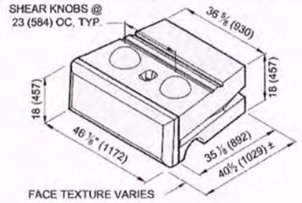

R-41M 41" HALF MIDDLE

R-41HM 41" (1030mm) HALF MIDDLE

	Cobble / Limestone	Kingstone / Ledgestone
Face Texture:	Cobble / Limestone	Kingstone / Ledgestone
Block Weight:	1020 lb (460 kg)	990 lb (450 kg)
Block Volume:	7.14 ft³ (0.20 m³)	6.90 ft³ (0.20 m³)
Center of Gravity:	21.4" (543 mm)	20.8" (528 mm)

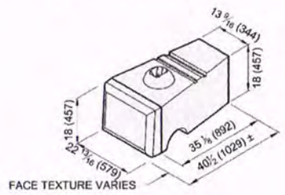

45° OUTSIDE CORNER RADIAL SOULTION

(41" AND 28" SERIES)

MINIMUM RADIUS AND OFFSET FOR BOTTOM ROW

NUMBER OF COURSES	HEIGHT OF BLOCKS	RADIUS FROM FACE OF BLOCK	OFFSET
1	1'-6"	14'-6"	± 14 1/2"
2	3'-0"	14'-8"	± 14 1/2"
3	4'-6"	14'-10"	± 14 3/4"
4	6'-0"	15'-0"	± 14 3/4"
5	7'-6"	15'-2"	± 15"
6	9'-0"	15'-4"	± 15 1/2"
7	10'-6"	15'-6"	± 15 3/4"
8	12'-0"	15'-8"	± 15 1/2"
9	13'-6"	15'-10"	± 15 3/4"
10	15'-0"	16'-0"	± 16 1/2"
11	16'-6"	16'-2"	± 16"
12	18'-0"	16'-4"	± 16 1/2"
13	19'-6"	16'-6"	± 16 3/4"
14	21'-0"	16'-8"	± 16 1/2"

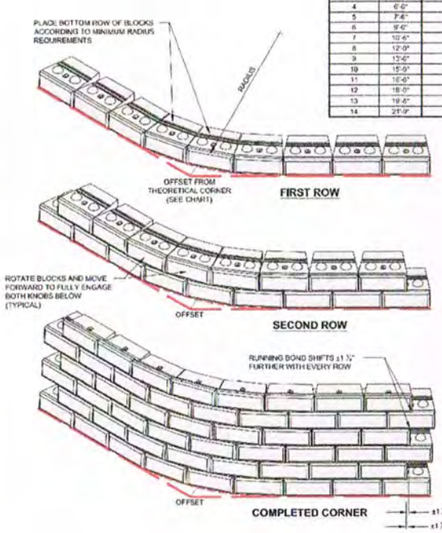

DRAWN BY: JRJ	TITLE:	45° Outside Corner Radial Solution	REDI-ROCK
APPROVED BY: JRJ			25451 US 31 SOUTH, CHARLEVOIX, MI 49720
DATE: 06-22-2015			(800) 222-9455 (ok 301) • engineering@redi-rock.com www.redi-rock.com
SHEET: 1 of 1	FILE:	12 Outside Corner Radial Solution 062215.dwg	

Freestanding Blocks with Cap at Top of Wall

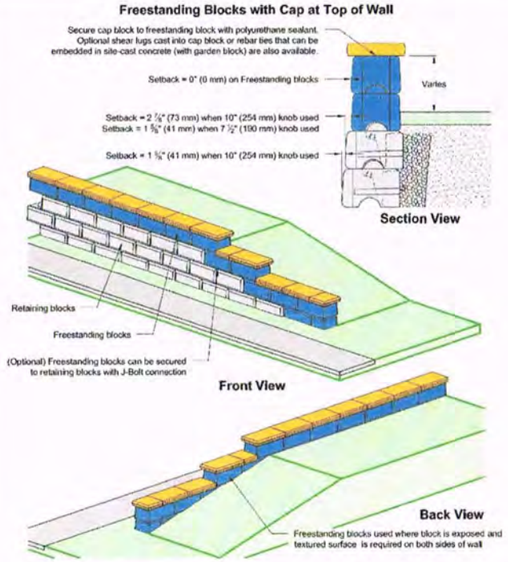

One-component, highly flexible, non-printing, gun grade, high performance elastomeric polyurethane sealant shall have movement of plus or minus 25% per ASTM C719, tensile strength greater than 200 psi (1.4 MPa) per ASTM D412, and adhesion to peel on concrete greater than 20 PLI per ASTM C794. Apply sealant in one and one half-inch (1.5") (38 mm) diameter round "hersey kiss" shaped dollops located in two rows at the top of the Freestanding blocks at 8" (203 mm) on center.

This drawing is for reference only. Determination of the suitability and/or manner of use of any details contained in this document is the sole responsibility of the design engineer of record. Final project designs, including all construction details, shall be prepared by a licensed professional engineer using the actual conditions of the proposed site.

DRAWN BY: JRJ	TITLE:	Freestanding Blocks with Cap at Top of Wall	REDI-ROCK
APPROVED BY: JRJ			25451 US 31 SOUTH, CHARLEVOIX, MI 49720
DATE: 06-22-2015			(800) 222-9455 (ok 301) • engineering@redi-rock.com www.redi-rock.com
SHEET: 1 of 1	FILE:	3 Freestanding Blocks with Cap at Top of Wall 062215.dwg	

REDI-ROCK

Curved Walls

1. Concave curves may be installed at varying radii. Radius lengths less than 14'6" will result in exposing more of the blocks in the underlying layer.

2. Convex curves may be installed at varying radii. The minimum radius for full size blocks is 14'6". A minimum radius of 8'0" can be made using all half blocks. Note that the shortest radius will be on the top course.

3. For multiple course walls, the radius will shrink by up to 2" for each course of height due to the block setback. Refer to the following chart for minimum radius walls.

Minimum Radius for Bottom Row

Number of Courses	Height of Blocks	No Planter Blocks: Radius from face of block	No Planter Blocks: Distance between blocks per sketch	1 Planter Block: Radius from face of block	1 Planter Block: Distance between blocks per sketch
One-course Wall	1' 6"	14' 6"	0.13"	-	-
Two-course Wall	3' 0"	14' 8"	0.21"	-	-
Three-course Wall	4' 6"	14' 10"	0.28"	-	-
Four-course Wall	6' 0"	15' 0"	0.36"	16' 2"	0.83"
Five-course Wall	7' 6"	15' 2"	0.43"	16' 4"	0.88"
Six-course Wall	9' 0"	15' 4"	0.50"	16' 6"	0.95"
Seven-course Wall	10' 6"	15' 6"	0.57"	16' 8"	1.01"
Eight-course Wall	12' 0"	15' 8"	0.63"	16' 10"	1.06"
Nine-course Wall	13' 6"	15' 10"	0.70"	Single Planter Walls are only available for heights ranging from 6' 0" to 12' 0". See planter wall charts.	
Ten-course Wall	15' 0"	16' 0"	0.76"		
Eleven-course Wall	16' 6"	16' 2"	0.83"		
Twelve-course Wall	18' 0"	16' 4"	0.88"		
Thirteen-course Wall	19' 6"	16' 6"	0.95"		
Fourteen-course Wall	21' 0"	16' 8"	1.01"		

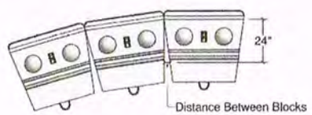

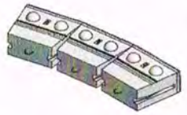

Number of Courses	Height of Blocks	2 Planter Blocks: Radius from face of block	2 Planter Blocks: Distance between blocks per sketch
Six-course Wall	9' 0"	17' 8"	1.33"
Seven-course Wall	10' 6"	17' 10"	1.38"
Eight-course Wall	12' 0"	18' 0"	1.43"
Nine-course Wall	13' 6"	18' 2"	1.48"
		Double Planter Walls are only available for heights ranging from 9' 0" to 13' 6". See planter wall charts.	

As-Built
7/2/21

Harry Todd Park Waterfront Renovation

Lakewood Parks & Recreation Department
Lakewood, WA

Robert W. Droll
Landscape Architect, PS

4405 7th Avenue SE, Ste. 203
Lacey, WA 98503
(360) 456-3813
FAX (360) 493-2063
E-MAIL bob@wdroll.com

Landscape Architecture
Site Planning
Environmental Design

Urban Design
Land Planning
Project Management

STATE OF WASHINGTON ROBERT W. DROLL LICENSED LANDSCAPE ARCHITECT

PROJECT NO. 18021
DRAWING
DESIGNED BY BD
DRAWN BY BD, PM
CHECKED BY BD

REVISION

DATE	CHANGE

DATE: MARCH 23, 2020

Wall Blocks & Wall Details

L6.1

O:\2018\18021 Harry Todd Park\Drawings\SHEETS\19_L6.0-6.2 - Wall Details.dwg
Mar-26-20 8:12pm

90° Outside Corner

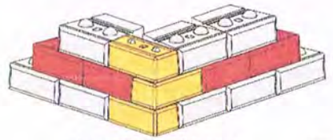

Isometric View of Corner

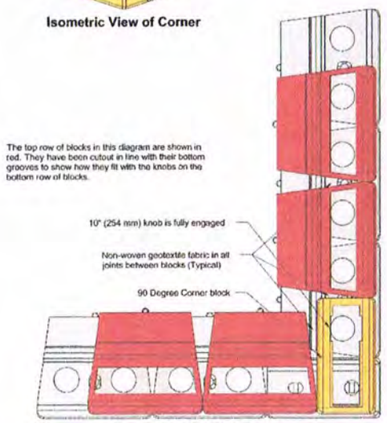

Top View of Bottom Two Rows

This drawing is for reference only. Determination of the suitability and/or manner of use of any details contained in this document is the sole responsibility of the design engineer of record. Final project designs, including all construction details, shall be prepared by a licensed professional engineer using the actual conditions of the proposed site.

DRAWN BY: JRJ	TITLE: 90° Outside Corner Detail 90° Corner Block Option	REDI-ROCK	05481 US 31 SOUTH, CHARLEVOIX, MI 49720 (866) 222-8400 ext 3093 • engineering@redi-rock.com www.redirock.com
APPROVED BY: JRJ			
DATE: 17MAR2016			
SHEET: 1 of 1	FILE: 1 90deg Outside Corner Detail -Corner Block 031716.dwg		

90° OUTSIDE CORNER (60" BLOCKS)

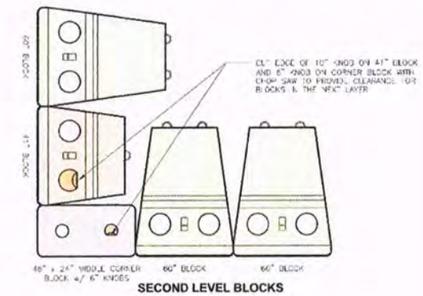

SECOND LEVEL BLOCKS

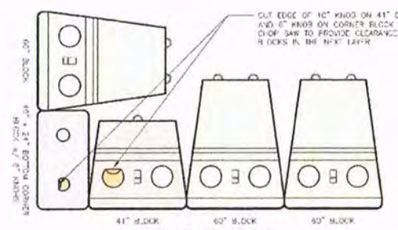

FIRST LEVEL BLOCKS

DRAWN BY: JRJ	TITLE: 90° Outside Corner Detail 60" Blocks	REDI-ROCK	05481 US 31 SOUTH, CHARLEVOIX, MI 49720 (866) 222-8400 ext 3093 • engineering@redi-rock.com www.redi-rock.com
APPROVED BY: JRJ			
DATE: 06-22-2015			
SHEET: 1 of 1	FILE: 3 90deg Outside Corner Detail - 60in Blocks 062215.dwg		

90° OUTSIDE CORNER DETAIL

(41" AND 28" SERIES)

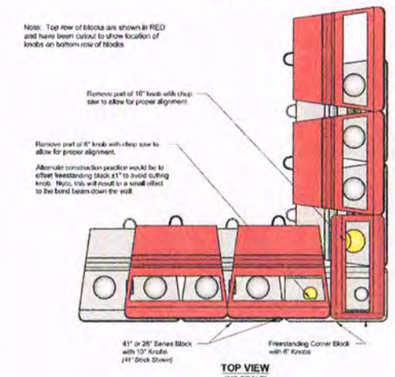

TOP VIEW
(NO SCALE)

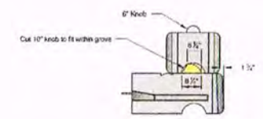

SIDE VIEW
(NO SCALE)

DRAWN BY: JRJ	TITLE: 90° Outside Corner Detail Trimmed Knob Option	REDI-ROCK	05481 US 31 SOUTH, CHARLEVOIX, MI 49720 (866) 222-8400 ext 3093 • engineering@redi-rock.com www.redi-rock.com
APPROVED BY: JRJ			
DATE: 06-22-2015			
SHEET: 1 of 1	FILE: 2 90deg Outside Corner Detail - Trimmed Knob 062215.dwg		

BLOCK-TO-BLOCK SETBACK OPTIONS

NO SCALE

Five degree (5°) setback

(Standard)

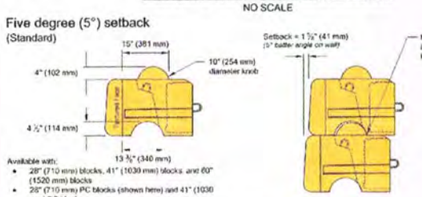

Available with:
- 28" (710 mm) blocks, 41" (1030 mm) blocks, and 60" (1520 mm) blocks
- 28" (710 mm) PC blocks (shown here) and 41" (1030 mm) PC blocks

One degree (1°) setback

(Specialty)

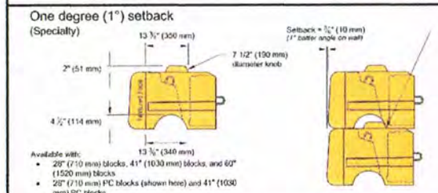

Available with:
- 28" (710 mm) blocks, 41" (1030 mm) blocks, and 60" (1520 mm) blocks
- 28" (710 mm) PC blocks (shown here) and 41" (1030 mm) PC blocks

DRAWN BY: JRJ	TITLE: Block Setback Options Normal Batter	REDI-ROCK	05481 US 31 SOUTH, CHARLEVOIX, MI 49720 (866) 222-8400 ext 3093 • engineering@redi-rock.com www.redirock.com
APPROVED BY: JRJ			
DATE: 06-22-2015			
SHEET: 1 of 1	FILE: 4 Block Setback Options Normal Batter 062215.dwg		

90° Inside Corner (41" and 28" Series)

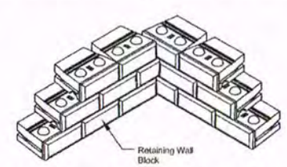

90° Inside Corner with Planter Blocks (41" Series)

DRAWN BY: JRJ	TITLE: 90° Corner Options	REDI-ROCK	05481 US 31 SOUTH, CHARLEVOIX, MI 49720 (866) 222-8400 ext 3093 • engineering@redi-rock.com www.redi-rock.com
APPROVED BY: JRJ			
DATE: 06-22-2015			
SHEET: 1 of 1	FILE: 4 90deg Corner Options 062215.dwg		

POSITIVE CONNECTION (PC) DETAILS

NO SCALE

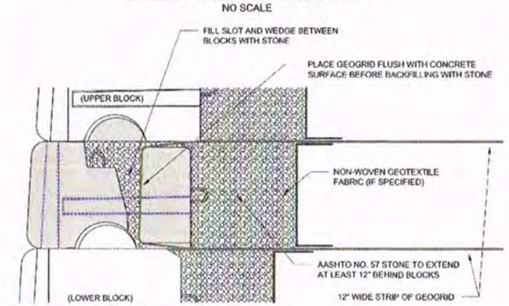

SECTION VIEW THROUGH BLOCKS
NO SCALE

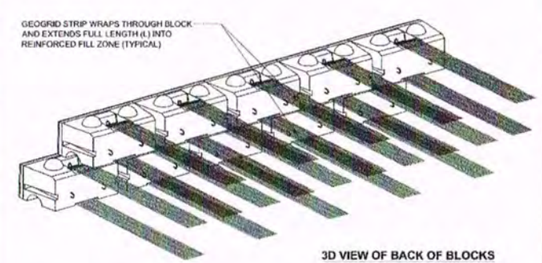

3D VIEW OF BACK OF BLOCKS
NO SCALE

DRAWN BY: JRJ	TITLE: Positive Connection Detail	REDI-ROCK	05481 US 31 SOUTH, CHARLEVOIX, MI 49720 (866) 222-8400 ext 3093 • engineering@redi-rock.com www.redirock.com
APPROVED BY: JRJ			
DATE: 06-22-2015			
SHEET: 1 of 1	FILE: 1 Positive Connection Detail 062215.dwg		

As-Built
7/2/21

Harry Todd Park Waterfront Renovation

Lakewood Parks & Recreation Department
Lakewood, WA

Robert W. Droll
Landscape Architect, PB

4405 7th Avenue SE, Ste 203
Lacey, WA 98503
(360) 456-3813
FAX (360) 493-2063
E-MAIL bob@wdroll.com

Landscape Architecture
Site Planning
Environmental Design

Urban Design
Land Planning
Project Management

STATE OF WASHINGTON — ROBERT W. DROLL — LANDSCAPE ARCHITECT

PROJECT NO. 18021
DRAWING
DESIGNED BY BD
DRAWN BY BD, PM
CHECKED BY BD

REVISION

DATE	CHANGE

DATE: MARCH 23, 2020

Wall Details

L6.2

O:\2018\18021 Harry Todd Park\Drawings\SHEETS\19_L6.0-6.2 - Wall Details.dwg
Mar-20-20 8:14am

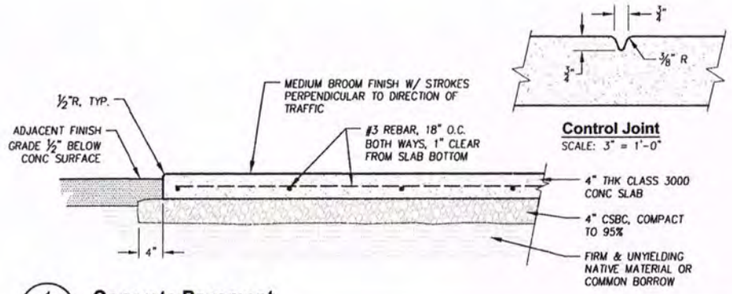

Control Joint
SCALE: 3" = 1'-0"

1 / L7.0 Concrete Pavement
SCALE: 1"=1'-0"

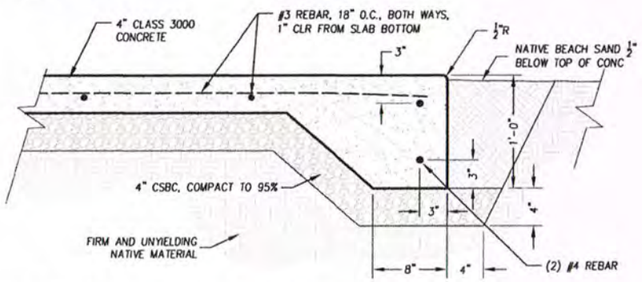

2 / L7.0 Concrete Pavement Thickened Edge
SCALE: 1½"=1'-0"

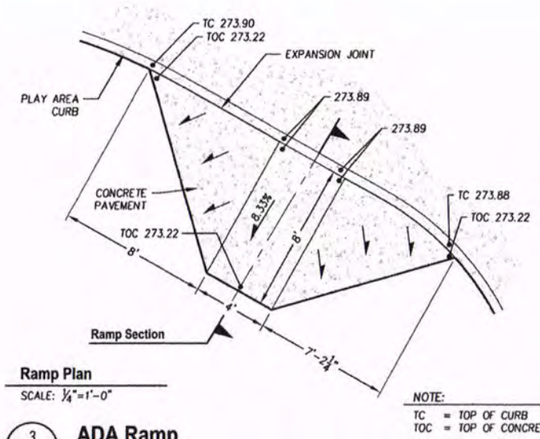

Ramp Plan
SCALE: ¼"=1'-0"

NOTE:
TC = TOP OF CURB
TOC = TOP OF CONCRETE

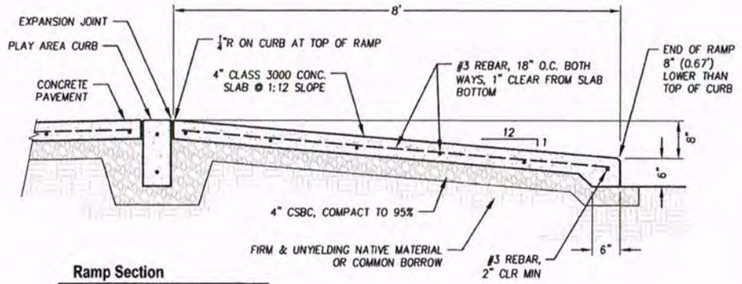

Ramp Section
SCALE: ¾"=1'-0"

3 / L7.0 ADA Ramp

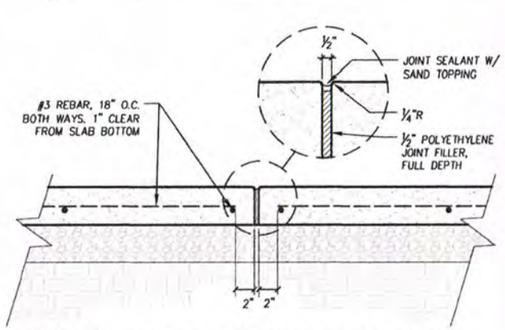

4 / L7.0 Expansion Joint @ Concrete Pavement
SCALE: 1½"=1'-0"

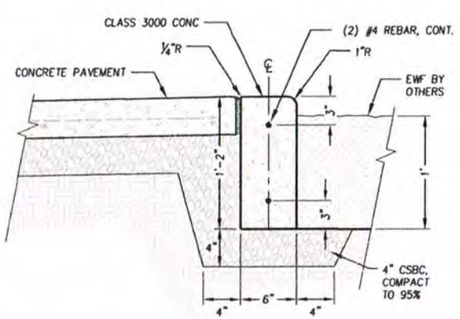

5 / L7.0 Play Area Curb
SCALE: 1½"=1'-0"

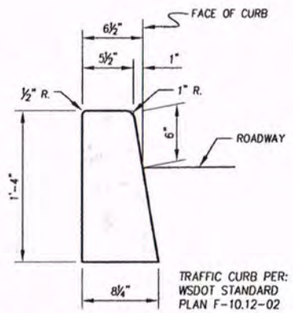

7 / L7.0 Traffic Curb
SCALE: 2"=1"-0"

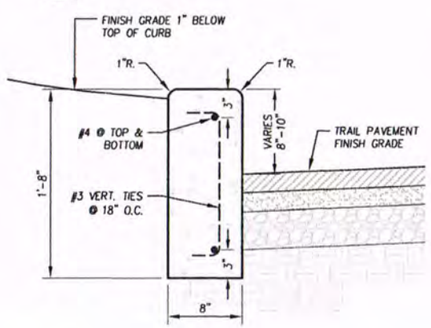

8 / L7.0 Concrete Curb A
SCALE: 2"=1"-0"

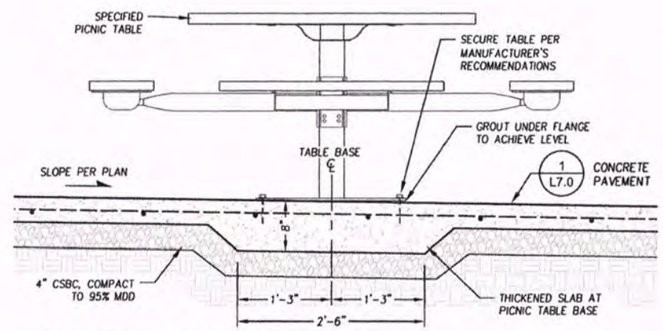

6 / L7.0 Picnic Table Type A & B
SCALE: 1"=1'-0"

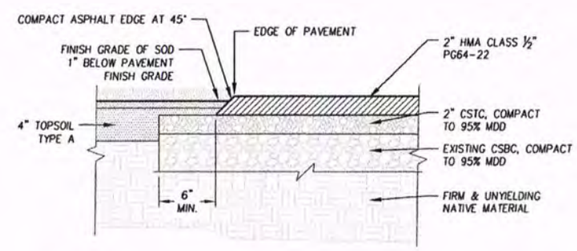

9 / L7.0 HMA Pavement
SCALE: 1½"=1'-0"

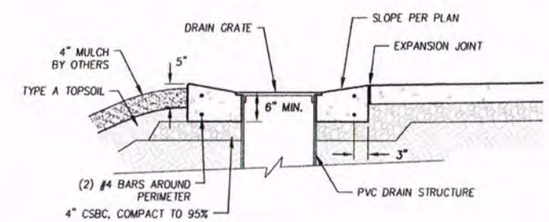

Cross Section

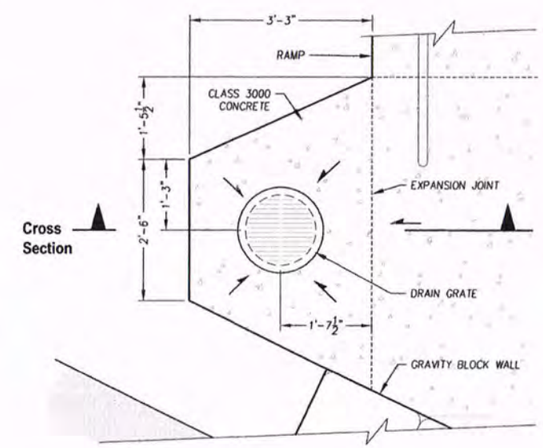

Plan View

10 / L7.0 Drain Apron
SCALE: ¾"=1'-0"

As-Built
7/2/21

Call 811 two business days before you dig

Harry Todd Park Waterfront Renovation

Lakewood Parks & Recreation Department
Lakewood, WA

Robert W. Droll
Landscape Architect, PS
4405 7th Avenue SE, Ste. 203
Lacey, WA 98503
(360) 456-3815
FAX (360) 493-2063
E-MAIL bob@rwdroll.com
Landscape Architecture
Site Planning
Environmental Design
Urban Design
Land Planning
Project Management

STATE OF WASHINGTON ROBERT W. DROLL LANDSCAPE ARCHITECT

PROJECT NO.	18021
DRAWING	
DESIGNED BY	BD
DRAWN BY	BD, PM
CHECKED BY	BD

REVISION

DATE	CHANGE

DATE: MARCH 23, 2020

Site Details

L7.0

O:\2018\18021 Harry Todd Park\Drawings\SHEETS\22_L7.0 - Site Details.dwg
Mar-20-20 8:16am

Provided to Builders Exchange of WA, Inc. For usage Conditions Agreement see www.bxwa.com - Always Verify Scale

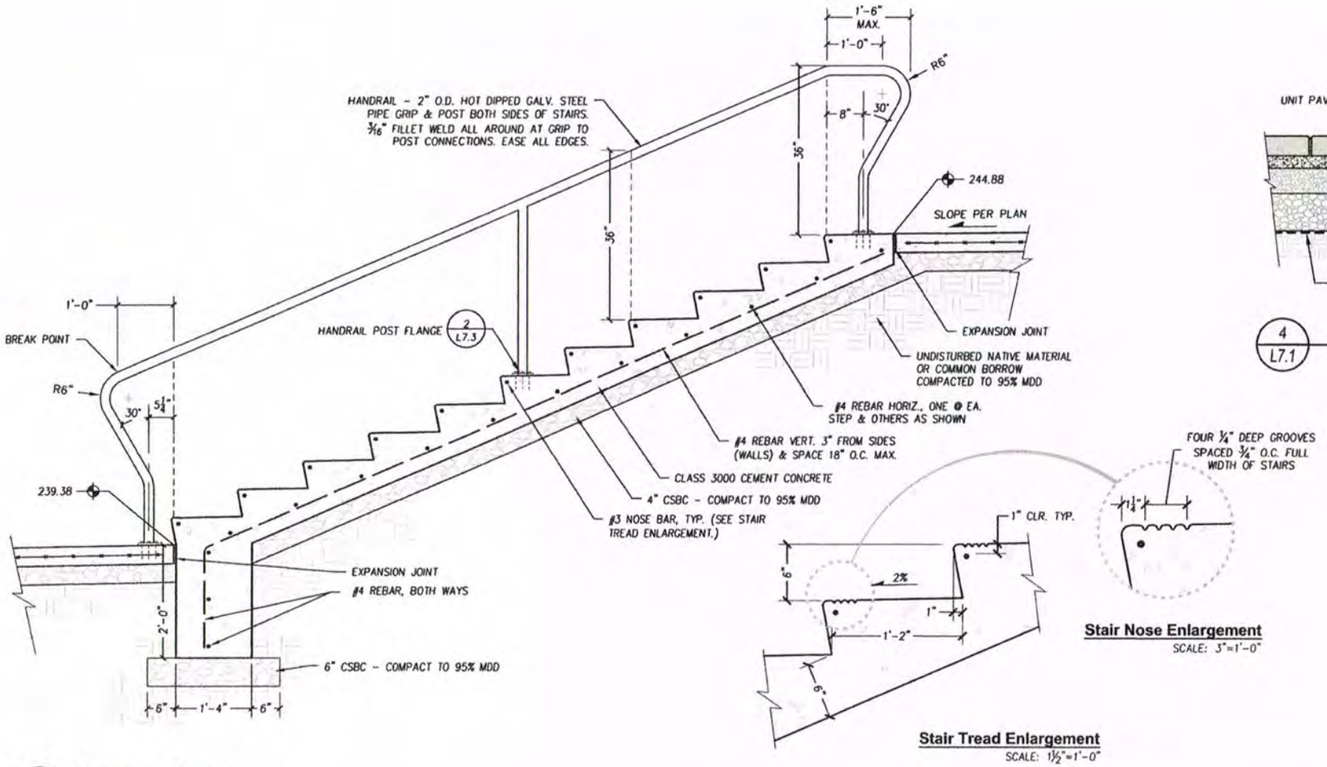

Stair Nose Enlargement
SCALE: 3"=1'-0"

Stair Tread Enlargement
SCALE: 1½"=1'-0"

1 / L7.1 **Concrete Stairs**
SCALE: ¾"=1'-0"

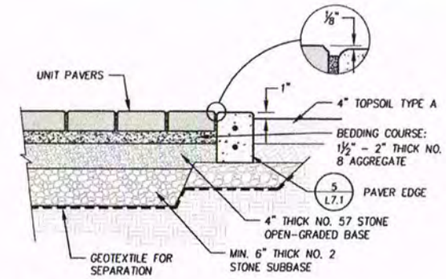

4 / L7.1 **Unit Pavers**
SCALE: 1"=1"-0"

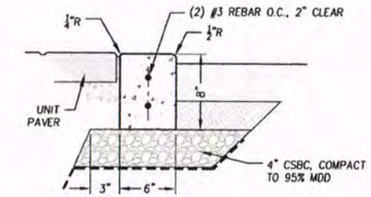

5 / L7.1 **Paver Edge**
SCALE: 1½"=1"-0"

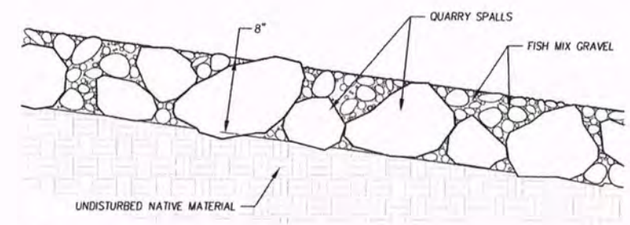

2 / L7.1 **8" Gravel Mix Layer**
SCALE: 1½"=1'-0"

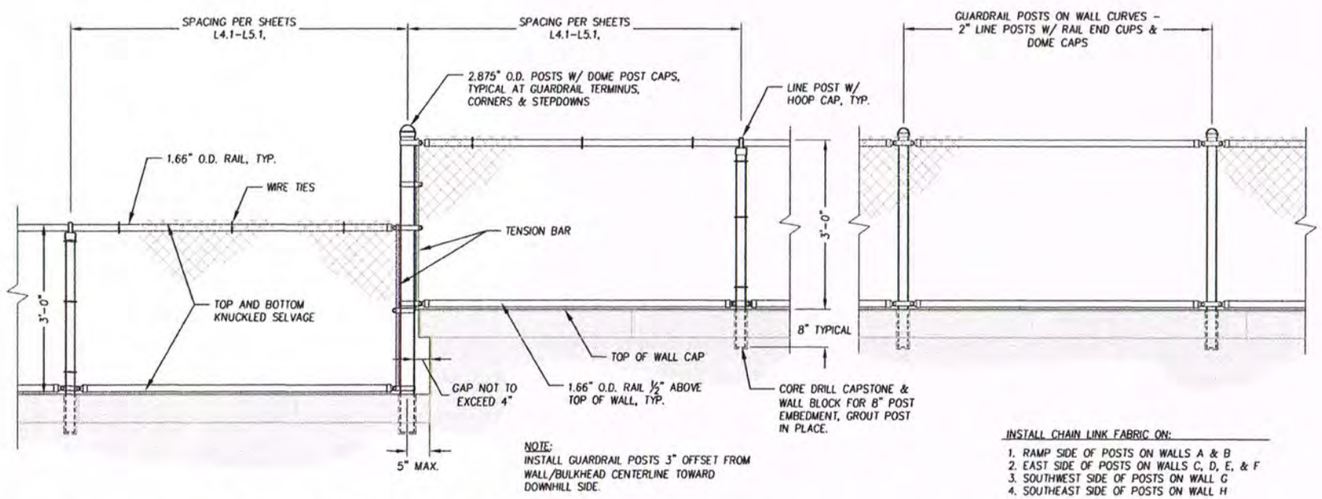

NOTE:
INSTALL GUARDRAIL POSTS 3" OFFSET FROM WALL/BULKHEAD CENTERLINE TOWARD DOWNHILL SIDE.

INSTALL CHAIN LINK FABRIC ON:
1. RAMP SIDE OF POSTS ON WALLS A & B
2. EAST SIDE OF POSTS ON WALLS C, D, E, & F
3. SOUTHWEST SIDE OF POSTS ON WALL G
4. SOUTHEAST SIDE OF POSTS ON WALL H

3 / L7.1 **Guardrail**
SCALE: ¾"=1'-0"

Guardrail Type 1 Chain Link Fence shown - Base Bid
Guardrail Type 2 - Alternate Bid Item B2 - same post spacing

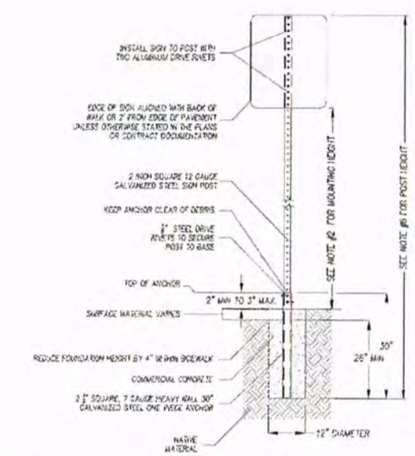

GENERAL NOTES:

1. VERIFY AND STAKE LOCATIONS OF TRAFFIC SIGNS FOR ENGINEER APPROVAL AND ADJUSTMENT PRIOR TO INSTALLATION.
2. MOUNTING HEIGHT SHALL BE 7 FEET UNLESS OTHERWISE APPROVED BY THE ENGINEER WITH EXCEPTION TO:
   A) MOUNTING HEIGHT FOR SECONDARY SIGNS MOUNTED BELOW ANOTHER SIGN MAY BE REDUCED BY 1 FOOT WHEN NOT LOCATED WITHIN SIDEWALK.
   B) MOUNTING HEIGHT FOR ARROW AND CHEVRON SIGNS SHALL BE 5 FEET WHEN NOT LOCATED WITHIN SIDEWALK.
3. SIGN FACE SHALL BE TYPE 4 SHEETING.
4. ALL HARDWARE AND FASTENERS SHALL BE GALVANIZED STEEL UNLESS OTHERWISE NOTED.
5. TOP OF FOUNDATION SHALL BE FLUSH WITH FINISH GRADE EXCEPT WHEN COVERED BY SIDEWALK.
6. FOR SIGNS OTHER THAN CHEVRON OR ARROW (W1-8, W1-8):
   A) USE 12" POST FOR SIGNS UP TO 30" TALL;
   B) USE 14" POST FOR SIGNS 30-54" TALL;
   C) CONTACT ENGINEER FOR SIGNS TALLER THAN 54"

APPROVED FOR PUBLICATION
Paul A. Bucich 01/10/20
Paul A. Bucich, P.E.
PUBLIC WORKS DIRECTOR/CITY ENGINEER
DATE

CITY OF LAKEWOOD WA #19966

DATE	REVISION DESCRIPTION	BY	APPROVED
12/27/19	ORIGINAL DRAWING	AC/CA	FAB

Public Works Department: 6000 Main Street SW 98499
NOT TO SCALE

Steel Post Street Sign Support
PS-03

Harry Todd Park Waterfront Renovation

Lakewood Parks & Recreation Department
Lakewood, WA

Robert W. Droll
Landscape Architect, PS
4405 7th Avenue SE, Ste. 203
Lacey, WA 98503
(360) 456-3813
FAX (360) 493-2063
E-MAIL bob@wdroll.com
Landscape Architecture
Site Planning
Environmental Design
Urban Design
Land Planning
Project Management

STATE OF WASHINGTON ROBERT W. DROLL REG. NO. 1338 EXP. 6/20/2020 LANDSCAPE ARCHITECT

PROJECT NO. 18021
DRAWING
DESIGNED BY BD
DRAWN BY BD, PM
CHECKED BY BD

REVISION

DATE	CHANGE

DATE: MARCH 23, 2020

Site Details

As-Built
7/2/21

L7.1

O:\2018\18021 Harry Todd Park\Drawings\SHEETS\23_L7.1 - Site Details.dwg
Mar-20-20 8:16am

Provided to Builders Exchange of WA, Inc. For usage Conditions Agreement see www.bxwa.com - Always Verify Scale

NOTES:
1. WHERE VERTICAL C.I.P. WALL ANGLES TOWARD PRECAST CONC. BLOCK WALL, PROVIDE SAME NUMBER OF REBAR AS SHOWN IN THIS CROSS SECTION BUT ANGLED W/ STANDARD LENGTH LAP SPLICES.
2. THE FRONT FACE OF THE NEW CAST-IN-PLACE WALL SHALL MATCH THE EXISTING WALL EXPOSED SURFACE AND ORIENTATION. EXISTING RETAINING WALL FOOTING FOOTPRINT UNKNOWN AT JOINT BETWEEN IT AND NEW CAST-IN-PLACE WALL. THE CONTRACTOR SHALL PROVIDE EXISTING RETAINING WALL CONDITION INFORMATION TO THE OWNER FOR REVIEW ONCE EXISTING FOOTING IS UNCOVERED DURING EXCAVATION. MODIFICATIONS TO THE CAST-IN-PLACE WALL GEOMETRY MAY BE REQUIRED.
3. IF THE WALL IS TALLER THAN 8'-9", THE CONTRACTOR SHALL SUBMIT AN RFI FOR POTENTIAL MODIFICATION TO THE SECTION.

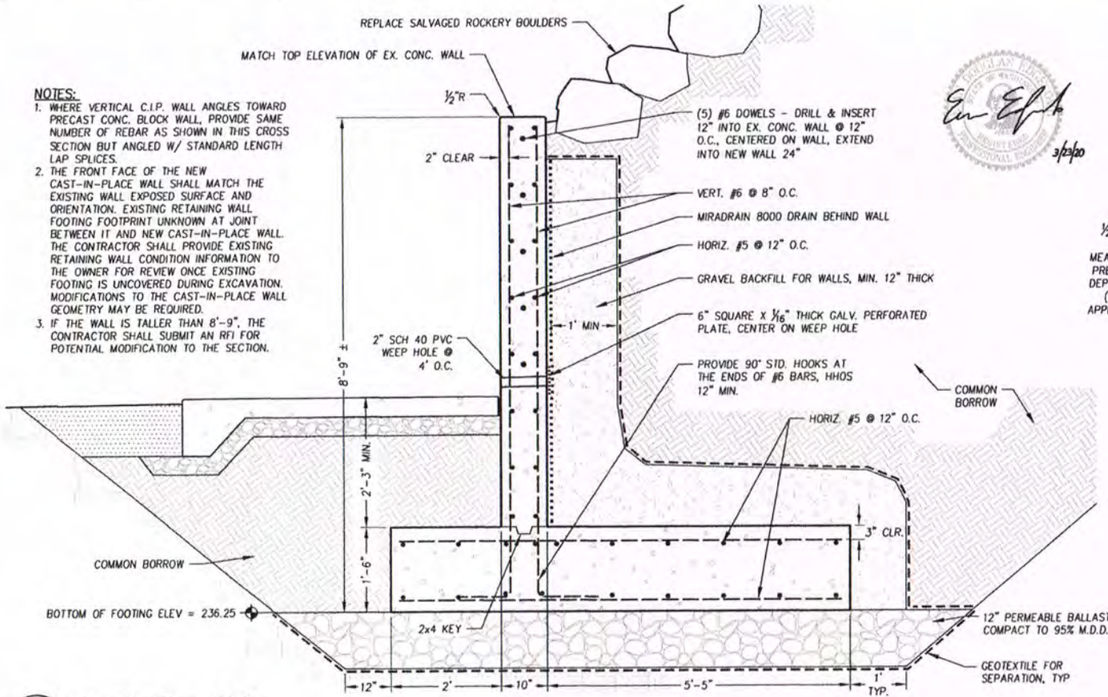

1 / L7.2 **Cast-In-Place Wall**
SCALE: ¾"=1'-0"

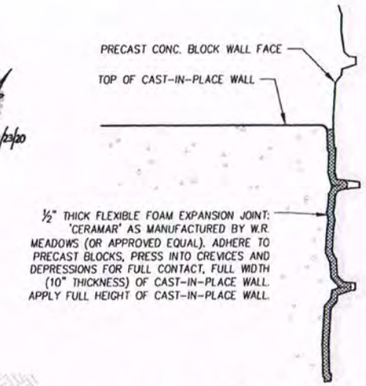

Cast-in-Place Wall Interface with Precast Conc. Block Wall (elevation view)
SCALE: 2"=1'-0"

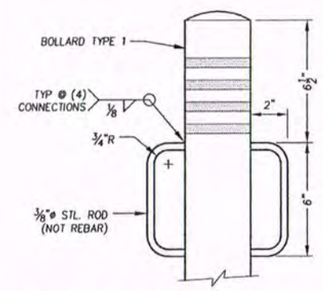

3 / L7.2 **Bollard Handles**
SCALE: 3"=1'-0"

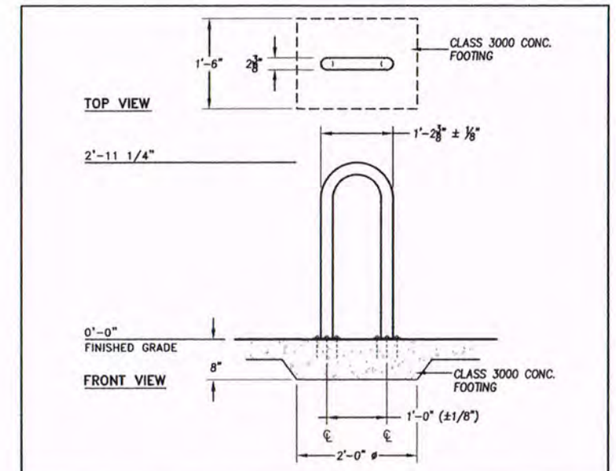

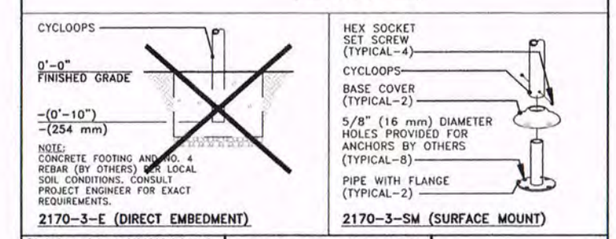

This drawing reveals the copyrighted intellectual property of Columbia Cascade Company. Not for use by others without our express, written authorization.
Authorization for use is hereby granted to architects, landscape architects and similar design professionals solely for the purpose of specifying Timberform products.

COLUMBIA CASCADE COMPANY
Makers of Timberform®, Pipeline® RePlay® Timberform®-2, InterPlay® CycLoops® and CycLocker® Products.
1300 S.W. Sixth Avenue, Suite 310 Telephone 503/223-1157
Portland, Oregon 97201-3454 Facsimile 503/223-4530
U.S.A.
WWW.TIMBERFORM.COM

Scale 3/4"=1'-0"	Drawn by: AT 07-04-10
	Chk'd by:

Title: TIMBERFORM CYCLOOPS MODEL NO. 2170-3 ORIGINAL CYCLOOPS
Drawing No. W-2170-3 Sheet 1 of 1

5 / L7.2 **Bike Rack**
NOT TO SCALE

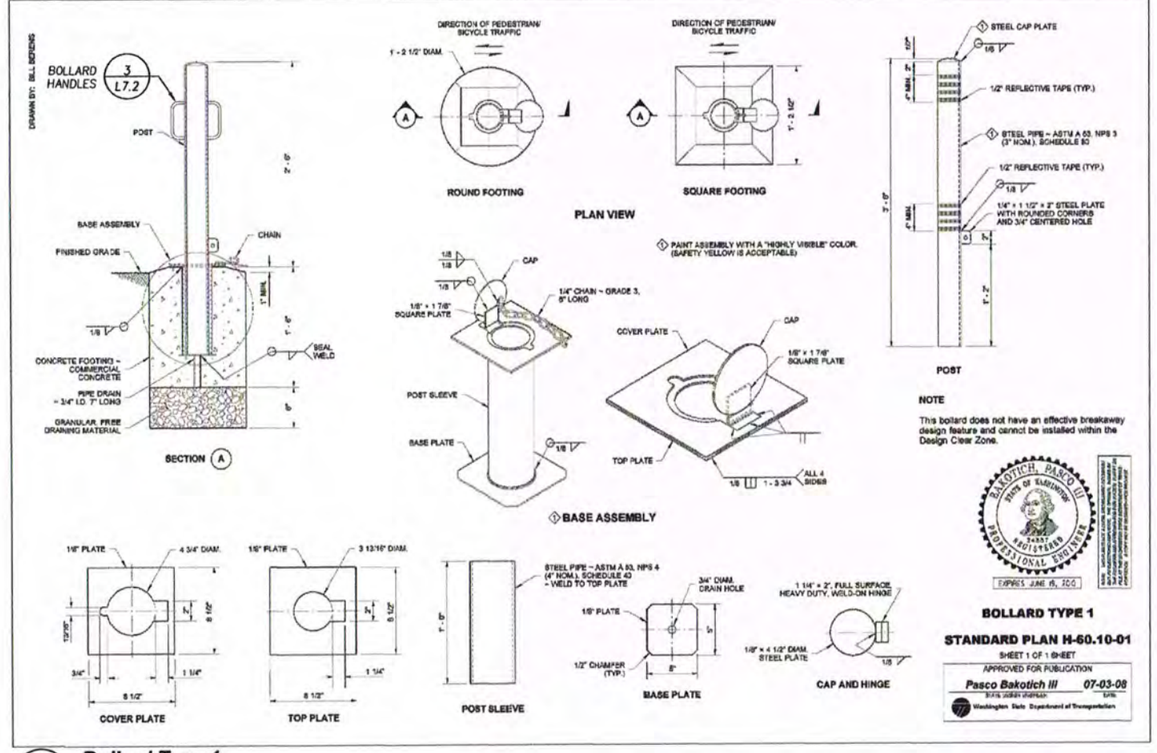

2 / L7.2 **Bollard Type 1**
NOT TO SCALE

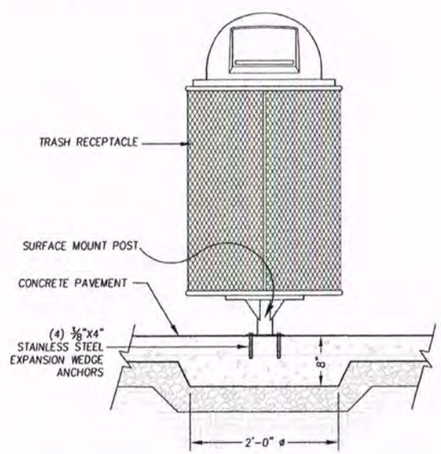

Section

4 / L7.2 **Trash Receptacle**
SCALE: 1"=1'-0"

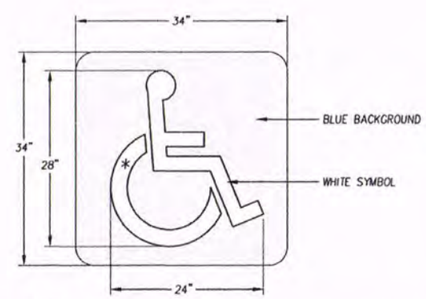

NOTE:
1. 34" x 34" BLUE BACKGROUND. BLUE SHALL BE IN ACCORDANCE WITH MUTCD/FEDERAL SPECIFICATIONS. (COLUMBIA PAINT 17-123-21 INSTANT DRY ACRYLIC TRAFFIC PAINT "HANDICAP BLUE" OR EQUIVALENT)
2. 24" x 28" SYMBOL OF ACCESSIBILITY SHALL BE WHITE.

* SEE STATE FABRICATION MANUAL APPENDIX D-12

6 / L7.2 **Accessibility Pavement Marking**
NOT TO SCALE

Harry Todd Park Waterfront Renovation

Lakewood Parks & Recreation Department
Lakewood, WA

Robert W. Droll
Landscape Architect, PS
4405 7th Avenue SE, Ste. 203
Lacey, WA 98503
(360) 456-3813
FAX (360) 493-2063
E-MAIL bob@wdroll.com
Landscape Architecture
Site Planning
Environmental Design
Urban Design
Land Planning
Project Management
STATE OF WASHINGTON ROBERT W. DROLL LANDSCAPE ARCHITECT

PROJECT NO. 18021
DRAWING
DESIGNED BY BD
DRAWN BY BD, PM
CHECKED BY BD

REVISION

DATE	CHANGE

DATE: MARCH 23, 2020

Site Details

As-Built 7/2/21

L7.2

O:\2018\18021 Harry Todd Park\Drawings\SHEETS\24_L7.2 - Site Details.dwg
Mar-23-20 11:57am

REVISED

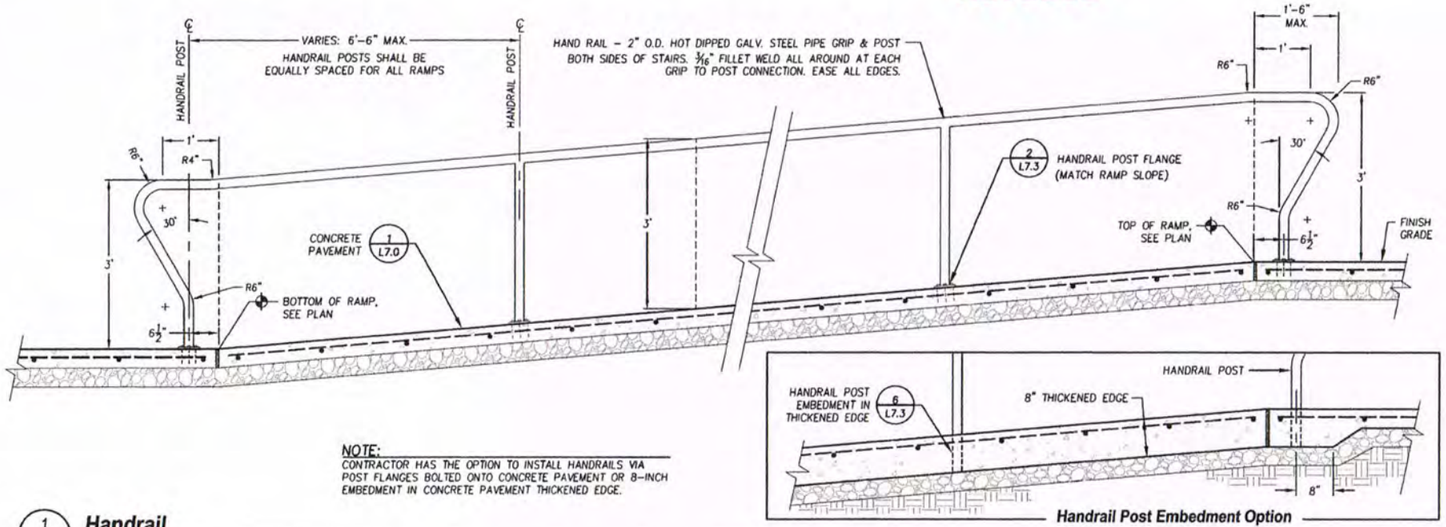

NOTE:
CONTRACTOR HAS THE OPTION TO INSTALL HANDRAILS VIA POST FLANGES BOLTED ONTO CONCRETE PAVEMENT OR 8-INCH EMBEDMENT IN CONCRETE PAVEMENT THICKENED EDGE.

Handrail Post Embedment Option

1 L7.3 Handrail
SCALE: ¾"=1'-0"

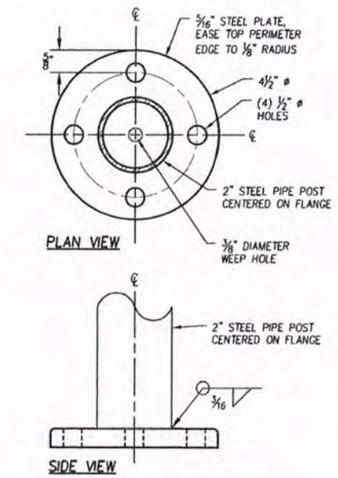

2 L7.3 Handrail Post Flange
SCALE: 6"=1'-0"

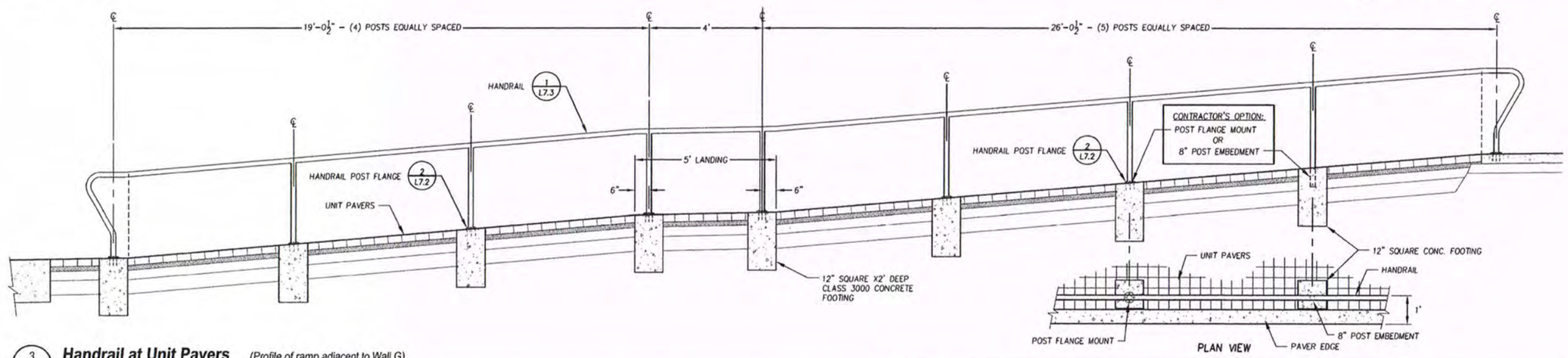

3 L7.3 Handrail at Unit Pavers (Profile of ramp adjacent to Wall G)
SCALE: ½"=1'-0"

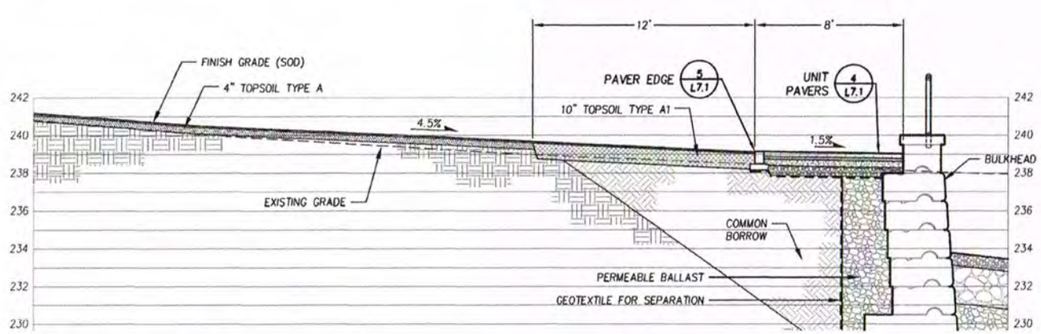

4 L7.3 Cross-section
SCALE: 1"=1'-0"

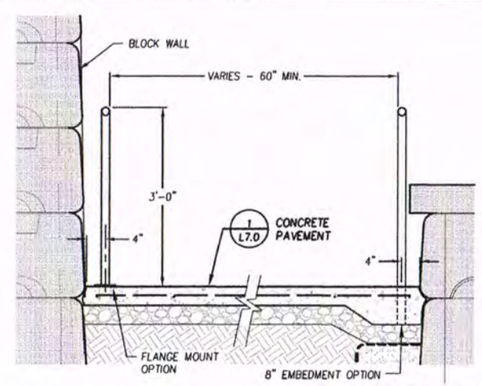

CONTRACTOR HAS OPTION TO INSTALL HANDRAILS VIA POST FLANGES OR 8-INCH EMBEDMENT IN PAVEMENT THICKENED EDGE.

5 L7.3 Handrail Section
SCALE: ¾"=1'-0"

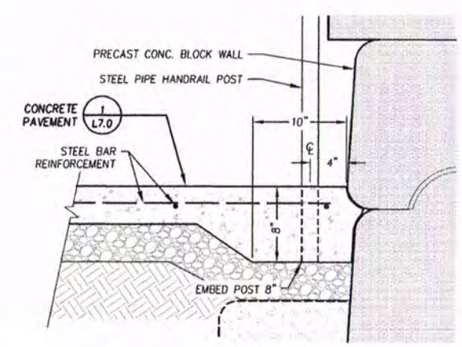

6 L7.3 Handrail Post Embedment in Thickened Edge
SCALE: 1½"=1'-0"

Harry Todd Park Waterfront Renovation

Lakewood Parks & Recreation Department
Lakewood, WA

Robert W. Droll
Landscape Architect, PS
4405 7th Avenue SE, Ste. 203
Lacey, WA 98503
(360) 456-3813
FAX (360) 493-2063
E-MAIL bob@wdroll.com
Landscape Architecture
Site Planning
Environmental Design
Urban Design
Land Planning
Project Management

STATE OF WASHINGTON ROBERT W. DROLL REGISTERED LANDSCAPE ARCHITECT

PROJECT NO. 18021
DRAWING
DESIGNED BY BD
DRAWN BY BD, PM
CHECKED BY BD

REVISION

DATE	CHANGE
4/22/20	ADDENDUM 2

DATE: APRIL 22, 2020

Site Details

As-Built
7/2/21

L7.3

G:\2018\18021 Harry Todd Park\Drawings\SHEETS\ADDENDUM 2\L7.2 - Site Details.dwg
Apr-22-20 1:50pm
Provided to Builders Exchange of WA, Inc. For usage Conditions Agreement see www.bxwa.com - Always Verify Scale

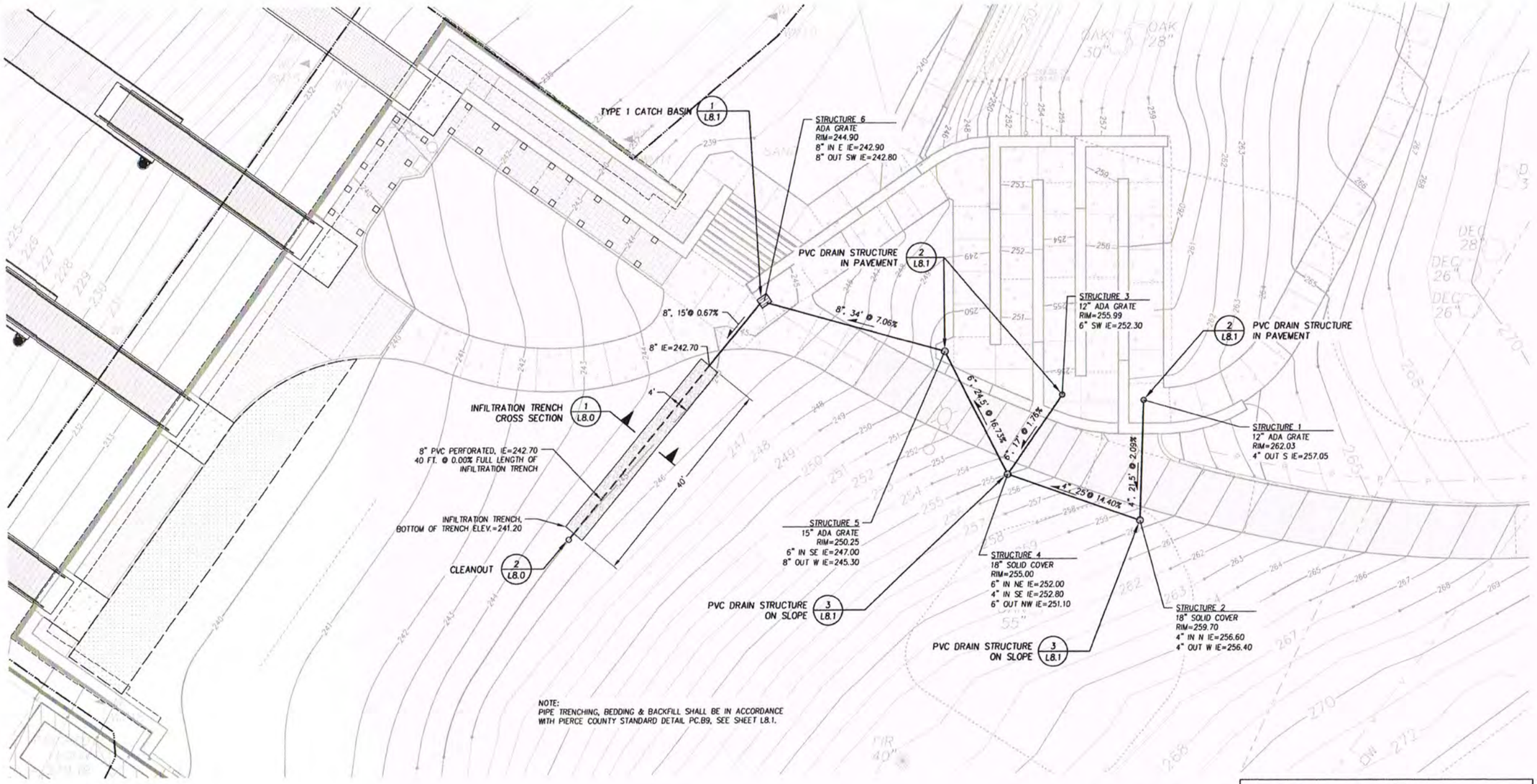

NOTE:
PIPE TRENCHING, BEDDING & BACKFILL SHALL BE IN ACCORDANCE WITH PIERCE COUNTY STANDARD DETAIL PC.B9, SEE SHEET L8.1.

STORMWATER NOTES:

1. DURING CONSTRUCTION AND UNTIL FINAL SITE STABILIZATION, ALL EXISTING AND NEWLY INSTALLED DRAINAGE STRUCTURES SHALL BE PROTECTED FROM SEDIMENTS.
2. ALL DRAIN PIPES SHALL BE LAID ON A PROPERLY PREPARED FOUNDATION IN ACCORDANCE WITH WSDOT STANDARD SPECIFICATIONS, SECTION 7-08. THIS SHALL INCLUDE NECESSARY LEVELING OF THE TRENCH BOTTOM OR THE TOP OF FOUNDATION MATERIAL AS WELL AS PLACEMENT AND COMPACTION OF REQUIRED BEDDING MATERIAL TO UNIFORM GRADE SO THAT THE ENTIRE LENGTH OF PIPE WILL BE SUPPORTED ON A DENSE UNYIELDING BASE. IF NATIVE MATERIAL IN THE TRENCH BOTTOM MEETS REQUIREMENTS FOR WSDOT "GRAVEL BACKFILL FOR PIPE BEDDING", THEN THE FIRST LIFT OF PIPE BEDDING MAY BE OMITTED PROVIDED THE TRENCH BOTTOM MATERIAL IS LOOSENED, REGRADED AND COMPACTED TO FORM A DENSE UNYIELDING BASE.
3. ALL PAVED AREAS SHALL DRAIN TO CATCH BASINS. RUN GRADE IN STRAIGHT LINE/PLANE BETWEEN SPOT ELEVATIONS SHOWN ON THE PLANS. MAKE ADJUSTMENTS IN GRADE TO AVOID STANDING WATER. TAKE SPECIAL CARE AT CATCH BASINS TO AVOID "BIRD BATHS" IN SURROUNDING PAVEMENT.
4. ALL CATCH BASIN GRATES SHALL BE ADJUSTED TO FINAL GRADES UPON COMPLETION OF PAVING.
5. ALL STORM DRAIN MAINS SHALL BE TELEVISION INSPECTED PRIOR TO FINAL ACCEPTANCE BY THE CITY. A COPY OF THE INSPECTION DATA SHALL BE PROVIDED TO THE CITY.

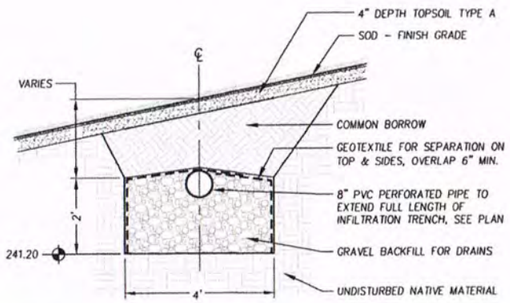

1/L8.0 **Infiltration Trench**
SCALE: ½"=1'-0"

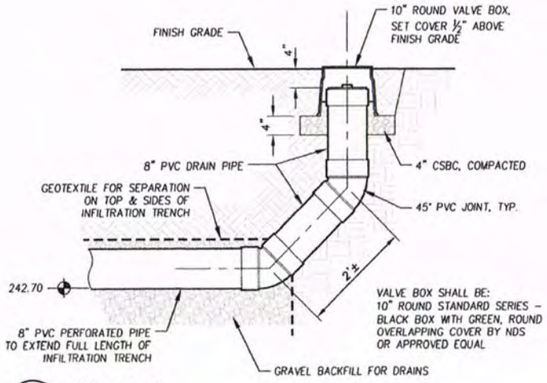

2/L8.0 **Cleanout**
SCALE: ¾"=1'-0"

Drain Structure Schedule

STRUCTURE NO.	TYPE	SIZE	GRATE
1	PVC DRAIN STRUCTURE	12"	12" ADA
2	PVC DRAIN STRUCTURE	15"	18" SOLID COVER
3	PVC DRAIN STRUCTURE	12"	12" ADA
4	PVC DRAIN STRUCTURE	15"	18" SOLID COVER
5	PVC DRAIN STRUCTURE	15"	15" ADA
6	TYPE 1 CATCH BASIN	22"x26"	ADA

SCALE: 1"=10'
0 5' 10' 15' 20'

Call 811 two business days before you dig

Harry Todd Park Waterfront Renovation

Lakewood Parks & Recreation Department
Lakewood, WA

Robert W. Droll
Landscape Architects, PS
4405 7th Avenue SE, Ste. 203
Lacey, WA 98503
(360) 456-3813
FAX (360) 493-2063
E-MAIL bob@wdroll.com
Landscape Architecture
Site Planning
Environmental Design
Urban Design
Land Planning
Project Management

STATE OF WASHINGTON ROBERT W. DROLL REG. 2151 EXP. 6/24/2020 LANDSCAPE ARCHITECT

PROJECT NO. 18021
DRAWING
DESIGNED BY BD
DRAWN BY BD, PM
CHECKED BY BD

REVISION

DATE	CHANGE

DATE: MARCH 23, 2020

Stormwater Plan

As-Built
7/2/21

L8.0

G:\2018\18021 Harry Todd Park\Drawings\SHEETS\26_L8.0 - Stormwater Plan.dwg
Mar-20-20 8:25am

Provided to Builders Engineers of WA, Inc. For usage Conditions Agreement see www.bowa.com - Always Verify Scale

FRAME AND ADA GRATE

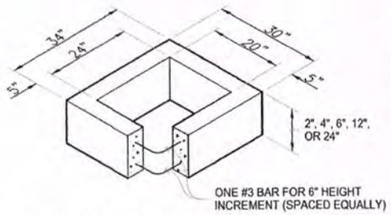

RECTANGULAR ADJUSTMENT SECTION

PIPE ALLOWANCES	
PIPE MATERIAL	MAXIMUM INSIDE DIAMETER
REINFORCED OR PLAIN CONCRETE	12"
ALL METAL PIPE	15"
CPSSP ★ (WSDOT STD. SPEC. 9-05.20)	12"
SOLID WALL PVC (WSDOT STD. SPEC. 9-05.12(1))	15"
PROFILE WALL PVC (WSDOT STD. SPEC. 9-05.12(2))	15"

★ CORRUGATED POLYETHYLENE STORM SEWER PIPE

NOTES

1. AS ACCEPTABLE ALTERNATIVES TO THE REBAR SHOWN IN THE PRECAST BASE SECTION, FIBERS (PLACED ACCORDING TO THE STANDARD SPECIFICATIONS), OR WIRE MESH HAVING A MINIMUM AREA OF 0.12 SQUARE INCHES PER FOOT SHALL BE USED WITH THE MINIMUM REQUIRED REBAR SHOWN IN THE ALTERNATIVE PRECAST BASE SECTION. WIRE MESH SHALL NOT BE PLACED IN THE KNOCKOUTS.
2. THE KNOCKOUT DIAMETER SHALL NOT BE GREATER THAN 20". KNOCKOUTS SHALL HAVE A WALL THICKNESS OF 2" MINIMUM TO 2.5" MAXIMUM. PROVIDE A 1.5" MINIMUM GAP BETWEEN THE KNOCKOUT WALL AND THE OUTSIDE OF THE PIPE. AFTER THE PIPE IS INSTALLED, FILL THE GAP WITH JOINT MORTAR IN ACCORDANCE WITH STANDARD SPECIFICATION 9-04.3.
3. THE MAXIMUM DEPTH FROM THE FINISHED GRADE TO THE LOWEST PIPE INVERT SHALL BE 5'.
4. THE FRAME AND GRATE MAY BE INSTALLED WITH THE FLANGE DOWN, OR INTEGRALLY CAST INTO THE ADJUSTMENT SECTION WITH FLANGE UP.
5. THE PRECAST BASE SECTION MAY HAVE A ROUNDED FLOOR, AND THE WALLS MAY BE SLOPED AT A RATE OF 1:24 OR STEEPER.
6. THE OPENING SHALL BE MEASURED AT THE TOP OF THE PRECAST BASE SECTION.
7. ALL PICKUP HOLES SHALL BE GROUTED FULL AFTER THE BASIN HAS BEEN PLACED.

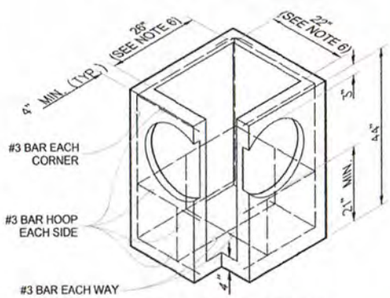

PRECAST BASE SECTION

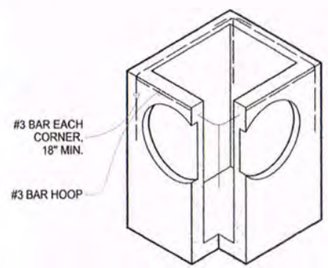

(SEE NOTE 1)

ALTERNATIVE PRECAST BASE SECTION

CATCH BASIN TYPE 1

SHEET 1 OF 1 SHEET

1 L8.1 **Type 1 Catch Basin**

NOT TO SCALE

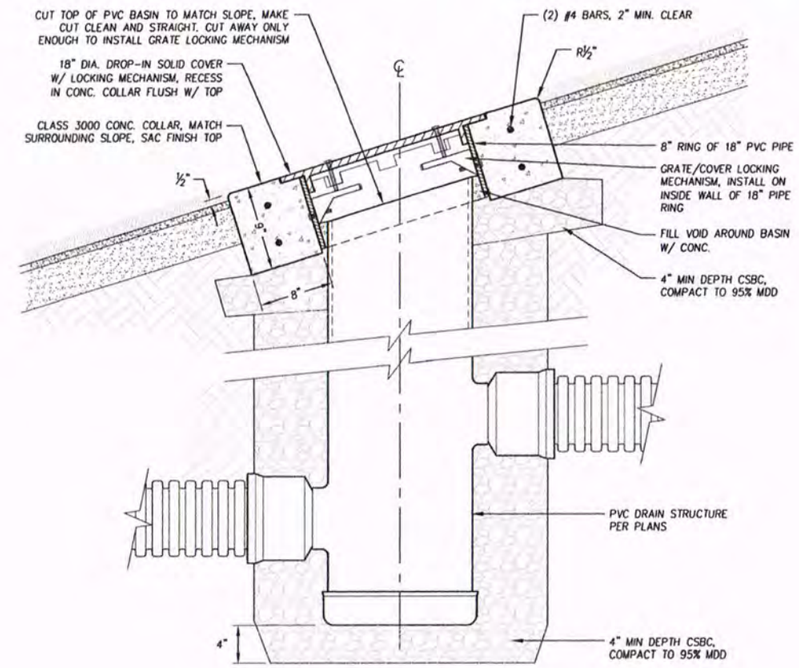

3 L8.1 **PVC Drain Structure On Slope**

SCALE: 1½"=1'-0"

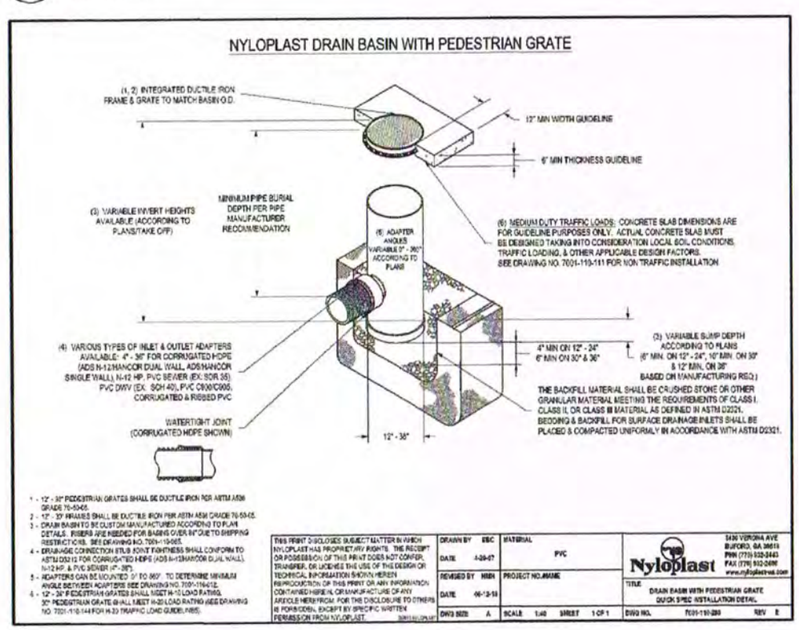

2 L8.1 **PVC Drain Structure In Pavement**

NOT TO SCALE

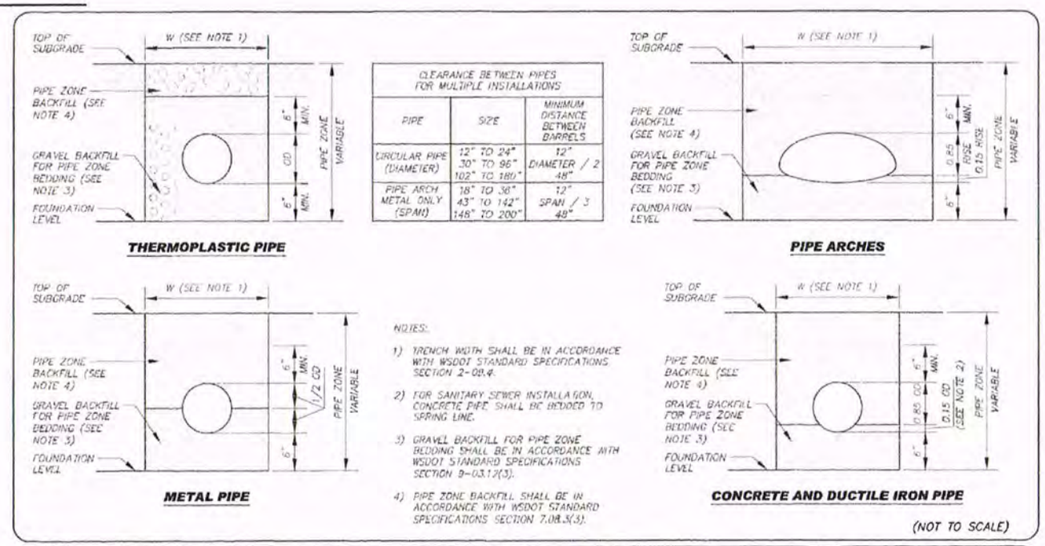

CLEARANCE BETWEEN PIPES FOR MULTIPLE INSTALLATIONS		
PIPE	SIZE	MINIMUM DISTANCE BETWEEN BARRELS
CIRCULAR PIPE (DIAMETER)	12" TO 24" 30" TO 96" 102" TO 180"	12" DIAMETER / 2 48"
PIPE ARCH METAL ONLY (SPAN)	18" TO 36" 43" TO 142" 148" TO 200"	12" SPAN / 3 48"

Pierce County
Public Works and Utilities
Office of the County Engineer
Tacoma Mall Office Building
4301 South Pine Street, Suite 446
Tacoma, WA 98409-7207

DATE	REVISION	APPROVED	DRAWN

BRIAN D. STACY, P.E.
COUNTY ENGINEER
7-14-09
Office of the County Engineer

PIPE ZONE BEDDING AND BACKFILL

PC.B9

Standard Drawings - Section B

Harry Todd Park Waterfront Renovation

Lakewood Parks & Recreation Department
Lakewood, WA

Robert W. Droll
Landscape Architect, PS
4405 7th Avenue SE, Ste. 203
Lacey, WA 98503
(360) 456-3813
FAX (360) 493-2063
E-MAIL bob@wdroll.com
Landscape Architecture
Site Planning
Environmental Design
Urban Design
Land Planning
Project Management

STATE OF WASHINGTON ROBERT W. DROLL REGISTERED LANDSCAPE ARCHITECT

PROJECT NO. 18021
DRAWING
DESIGNED BY BD
DRAWN BY BD, PM
CHECKED BY BD

REVISION

DATE	CHANGE

DATE: MARCH 23, 2020

Stormwater Details

As-Built 7/2/21

L8.1

Provided to Builders Exchange of WA, Inc. For Bidding Purposes. Any Other Use Requires Permission from Robert W. Droll, Landscape Architect, PS

Existing System Connection Notes

1. THE LOCATIONS OF ALL EXISTING IRRIGATION SPRINKLER HEADS AND PIPING SHOWN HEREON WAS OBTAINED FROM FIELD OBSERVATIONS, AND OWNER-PROVIDED AS-BUILT PLANS AND SHALL BE CONSIDERED APPROXIMATE. ACTUAL LOCATIONS WILL VARY IN THE FIELD. CONTRACTOR SHALL LOCATE HEADS TO PROVIDE THE MOST CONSISTENT SPACING AND PRECIPITATION RATES POSSIBLE, TAKING INTO ACCOUNT BOTH HEADS SHOWN ON PLAN, AND HEADS NOT SHOWN ON PLAN.
2. CONFIRM ACTUAL LOCATIONS AND ADJUST PIPING, HEADS, AND EQUIPMENT. NOTIFY OWNER IF DISCREPANCIES EXIST.
3. EXISTING MAINLINE SHOWN IS ASSUMED. POTHOLE TO LOCATE.
4. CONNECT ALL NEW WORK TO EXISTING MAINLINE AT OR NEAR POINT SHOWN ON PLANS.
5. INSTALL NEW CONTROL VALVE WIRES IN THE MAINLINE TRENCH TO THE CONTROL VALVES TO BE REPLACED.
6. EXISTING SALVAGED IRRIGATION CONTROLLER SHALL BE REINSTALLED IN THE CHASE OF THE RESTROOM BUILDING. CONTRACTOR SHALL MAKE ALL CONNECTIONS AS REQUIRED BETWEEN ZONE CONTROL VALVES AND IRRIGATION CONTROLLER TO PROVIDE A FULLY OPERABLE AUTOMATIC IRRIGATION SYSTEM.
7. CONTRACTOR SHALL TAKE ALL NECESSARY PRECAUTIONS TO PROTECT ROOT ZONES OF EXISTING TREES DURING ALL PREPARATION AND INSTALLATION WORK.
8. VERIFY NEW SLEEVE LOCATIONS W/ QUIGG BROTHERS, INC. PROJECT FOREMAN (ANDREW). 1

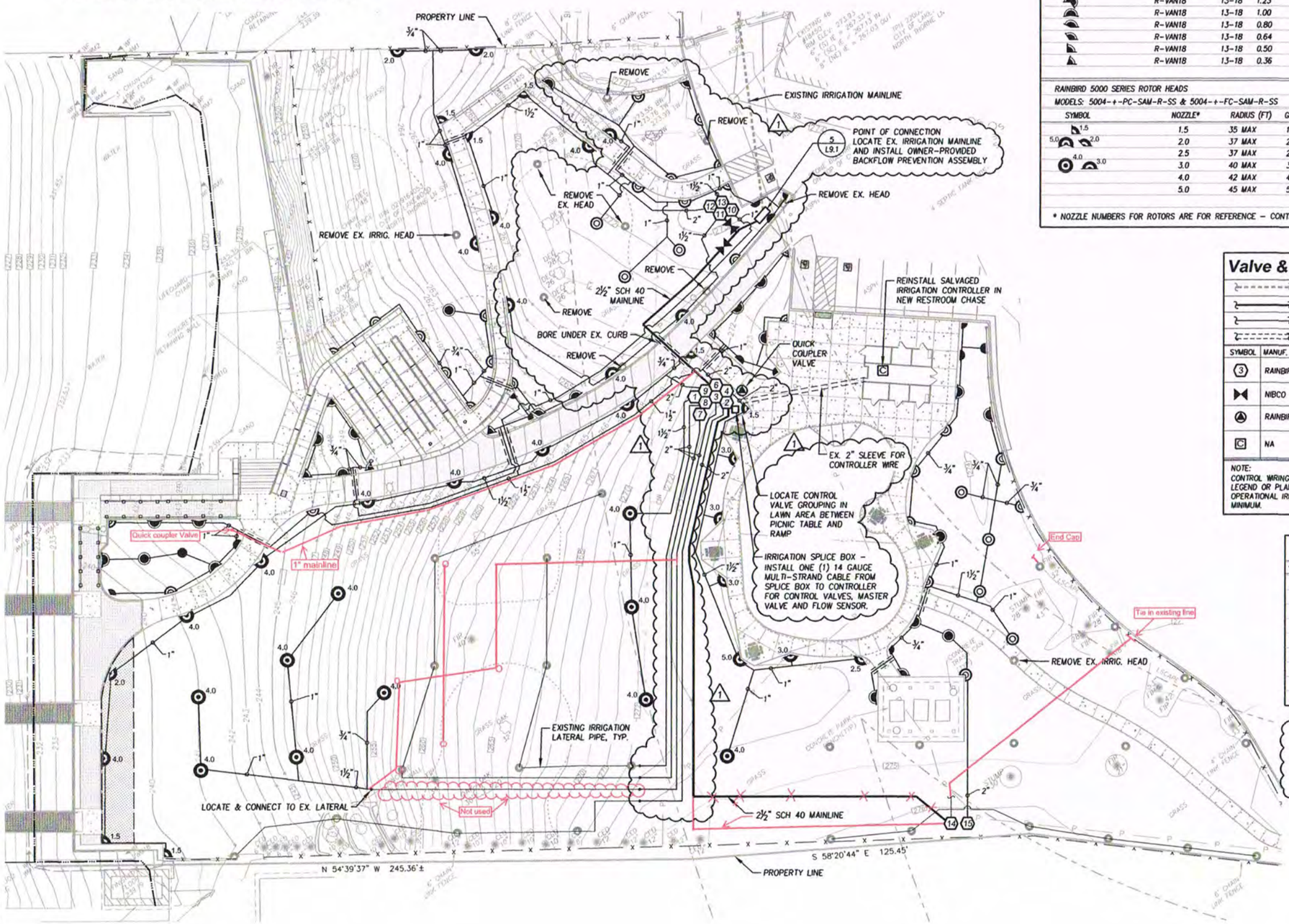

Irrigation Head Schedule

SYMBOL	CATALOG NUMBER	NOZZLE	RADIUS (FT)	GPM	PSI
SPRAY HEADS					
RAINBIRD: 1804-SAM-P45 (LAWN) & 1806-SAM-P45 (SHRUBS)					
	R-VAN14-360	8-14	1.27	45	
	R-VAN14	8-14	0.73		
	R-VAN14	8-14	0.63		
	R-VAN14	8-14	0.42		
	R-VAN14	8-14	0.32		
	R-VAN18-360	13-18	1.85	45	
	R-VAN18	13-18	1.51		
	R-VAN18	13-18	1.23		
	R-VAN18	13-18	1.00		
	R-VAN18	13-18	0.80		
	R-VAN18	13-18	0.64		
	R-VAN18	13-18	0.50		
	R-VAN18	13-18	0.36		

SYMBOL	CATALOG NUMBER	NOZZLE	RADIUS (FT)	GPM	PSI
SPRAY HEADS					
RAINBIRD: 1804-SAM-P45 (LAWN) & 1806-SAM-P45 (SHRUBS)					
	R-VAN24-360	17-24	3.48	45	
	R-VAN24	17-24	2.52		
	R-VAN24	17-24	1.96		
	R-VAN24	17-24	1.68		
	R-VAN24	17-24	1.26		
	R-VAN24	17-24	0.84		
	R-VAN24	17-24	0.60		

RAINBIRD 5000 SERIES ROTOR HEADS
MODELS: 5004-+-PC-SAM-R-SS & 5004-+-FC-SAM-R-SS

SYMBOL	NOZZLE*	RADIUS (FT)	GPM	PSI
1.5	1.5	35 MAX	1.5	45
5.0 2.0	2.0	37 MAX	2.1	
	2.5	37 MAX	2.5	
4.0 3.0	3.0	40 MAX	3.1	
	4.0	42 MAX	4.0	
	5.0	45 MAX	5.1	

* NOZZLE NUMBERS FOR ROTORS ARE FOR REFERENCE – CONTRACTOR SHALL ADJUST AS REQUIRED FOR ACTUAL CONDITIONS.

Valve & Piping Schedule

	EXISTING 2½" MAINLINE APPROXIMATE
	SCHEDULE 40 2½" PVC MAINLINE
	CLASS 200 PVC LATERAL LINE - ¾" MIN.
	CLASS 200 PVC, 6" SLEEVE

SYMBOL	MANUF. NAME	CATALOG NO.	DESCRIPTION
3	RAINBIRD	100-PEB-PRS-D 150-PEB-PRS-D	1" & 1½" AUTOMATIC REMOTE CONTROL VALVES WITH PRESSURE REGULATING MODULE
	NIBCO	T-113	2 INCH BRONZE MANUAL ISOLATION VALVE
	RAINBIRD	44LRC W/ SH-1 & 44K	1" BRASS QUICK COUPLING VALVE W/ LOCKING COVER, SUPPLY W/ HOSE SWIVEL & VALVE KEY
C	NA	- -	EXISTING CONTROLLER TO BE SALVAGED & REINSTALLED IN NEW RESTROOM BUILDING

NOTE:
CONTROL WIRING, DETECTION WIRING, AND CONDUIT (WHERE REQUIRED) IS NOT SHOWN ON LEGEND OR PLAN. PROVIDE ALL WIRING AND CONDUIT AS REQUIRED FOR A 100% OPERATIONAL IRRIGATION SYSTEM. STATION & COMMON WIRE SIZE - AWG 14 GAUGE MINIMUM.

Valve Chart

VALVE NO.	GPM	SIZE	VALVE NO.	GPM	SIZE
1	12.0	1½"	9	34.5	1½"
2	NA	MATCH EX.	10	5.0	1"
3	24.0	1½"	11	12.0	1"
4	25.5	1½"	12	32.5	1½"
5	–	–	13	26.0	1½"
6	32.5	1½"	14	NA	MATCH EX.
7	NA	MATCH EX.	15	37.0	1½"
8	NA	MATCH EX.			

MULTI-STRAND CABLE SHALL BE:
14 AWG – 50 CONDUCTOR – 600V – STRANDED CONDUCTOR, AS PROVIDED AT 'SHOW ME CABLES' (https://www.showmecables.com/) PRODUCT #: SKU 82-600-367 1

As-Built
7/2/21

SCALE: 1"=20'
0' 10' 20' 30' 40'

Call 811 two business days before you dig

Harry Todd Park Waterfront Renovation

Lakewood Parks & Recreation Department
Lakewood, WA

Robert W. Droll
Landscape Architect, PS
4405 7th Avenue SE, Ste. 203
Lacey, WA 98503
(360) 456-3813
FAX (360) 493-2063
E-MAIL bob@wdroll.com
Landscape Architecture
Site Planning
Environmental Design
Urban Design
Land Planning
Project Management
STATE OF WASHINGTON ROBERT W. DROLL LICENSED LANDSCAPE ARCHITECT

PROJECT NO. 18021
DRAWING
DESIGNED BY BD
DRAWN BY BD, PM
CHECKED BY BD

REVISION

	DATE	CHANGE
1	4/22/21	P.O.C. & CONTROL VALVES MOVED

DATE: ~~DECEMBER 22, 2020~~

Irrigation System Modification Plan REVISED 4-22-21

L9.0

O:\2018\18021 Harry Todd Park\Drawings\SHEETS\28_L9.0 - Irrigation Mod! Plan_REVISN_21-0421.dwg
Apr-22-21 11:54am

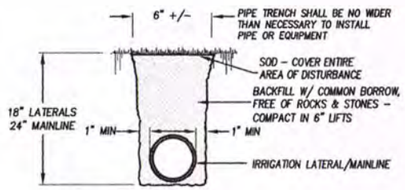

1 / L9.1 **Irrigation Pipe Typ.**
NOT TO SCALE

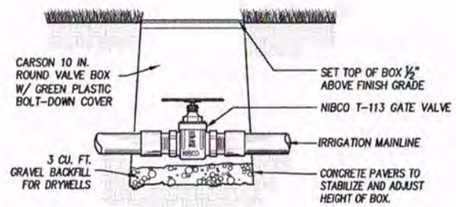

2 / L9.1 **Manual Isolation Valve - Typ.**
NOT TO SCALE

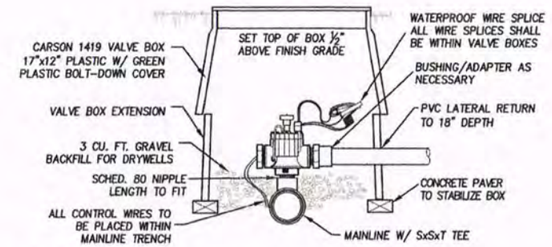

3 / L9.1 **Electric Control Valve Typ.**
NOT TO SCALE

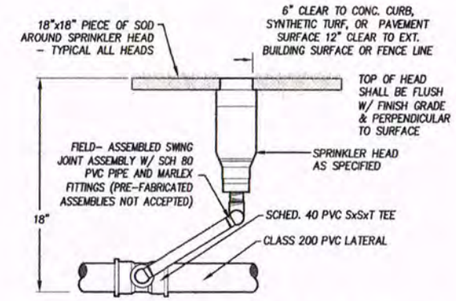

4 / L9.1 **Rotary Sprinkler Head Installation Typ.**
NOT TO SCALE

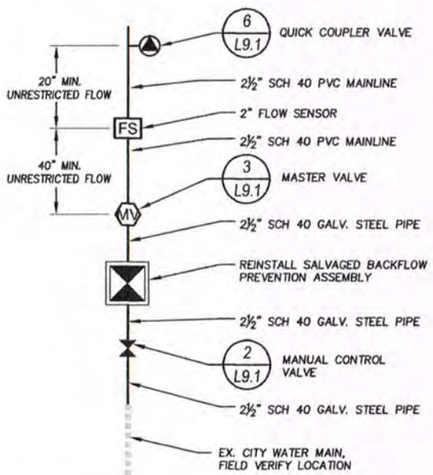

5 / L9.1 **Point of Connection (Schematic)**
NOT TO SCALE

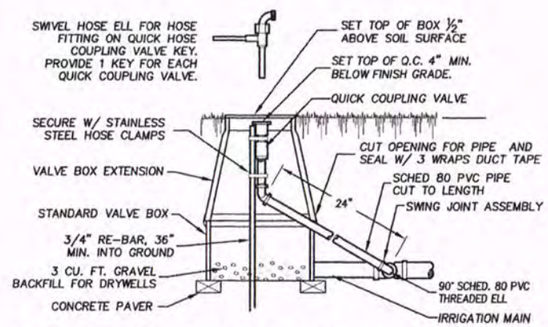

6 / L9.1 **Quick Coupler Valve Installation Typ.**
NOT TO SCALE

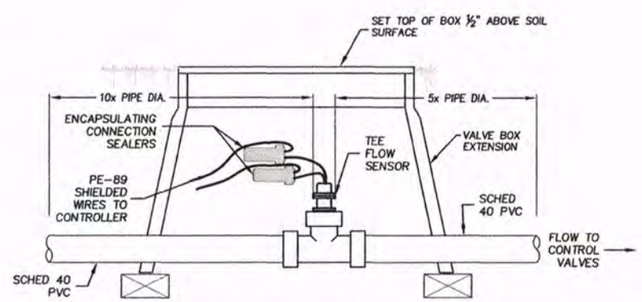

7 / L9.1 **Flow Sensor Installation Typ.**
NOT TO SCALE

Irrigation Improvements General Notes

1. CONTRACTOR IS REQUIRD TO VERIFY UTILITY LOCATIONS PRIOR TO CONSTRUCTION. CONTRACTOR SHALL CALL THE UTILITIES UNDERGROUND LOCATION CENTER (1-800-424-5555) AT LEAST TWO (2) WORKING DAYS PRIOR TO COMMENCEMENT OF CONSTRUCTION.
2. CONTRACTOR SHALL COORDINATE ALL WORK WITH THE GENERAL CONTRACTOR. ALL CONSTRUCTION CONFLICTS SHALL BE BROUGHT TO THE ATTENTION OF THE GENERAL CONTRACTOR AND CONSTRUCTION OBSERVER IMMEDIATELY UPON RECOGNITION.
3. CONTRACTOR IS RESPONSIBLE FOR A THOROUGH CLEAN-UP FOR HIS/HER RESPECTIVE WORK, DAILY AND AT PROJECT CLOSE-OUT.
4. CONTRACTOR IS RESPONSIBLE FOR PROTECTING ALL EXISTING IMPROVEMENTS. DAMAGE TO EXISTING IMPROVEMENTS BY THE CONTRACTOR SHALL BE REPAIRED OR REPLACED BY THE CONTRACTOR AND/OR QUALIFIED INSTALLERS/TRADES ACCEPTABLE TO THE SOLE SATISFACTION OF THE CONSTRUCTION OBSERVER AND AT NO COST TO THE OWNER.
5. SPRINKLER HEAD SYMBOLS SCHEMATICALLY REPRESENT DESIRED SPRAY PATTERNS. FIELD ADJUSTMENTS AND VERIFICATION OF SPRAY PATTERNS WILL BE NECESSARY. ADJUST SPRAY PATTERNS TO WATER LANDSCAPE AREA ONLY AND PREVENT OVERSPRAY ONTO BUILDINGS AND/OR PAVEMENT (UNLESS SPECIAL CIRCUMSTANCES PREVAIL).
6. SPRINKLER HEADS FOR SHRUB AREAS ARE TO BE 12" POP-UP TYPE, TURF AREA HEADS SHALL BE 4" POP-UP. SPRINKLER HEADS SHALL BE INSTALLED PER MANUFACTURER'S RECOMMENDATIONS.
7. ALL PIPING UNDER HARD SURFACES (INCLUDES CONCRETE, ASPHALT, CRUSHED GRAVEL) SHALL BE SLEEVED WITH 6" DIAMETER PVC CONDUIT EXTENDING THREE (3) FEET BEYOND HARD SURFACE EDGE. MARK ENDS WITH A ½" DIAMETER REBAR, 18" IN LENGTH. TOP OF REBAR TO BE 3" UNDER SOIL SURFACE. ALL SLEEVES UNDER HARD SURFACE SHALL BE STRAIGHT TO ALLOW FOR IRRIGATION PIPE REPLACEMENT.
8. COORDINATE IRRIGATION SLEEVE INSTALLATION WITH THE GENERAL CONTRACTOR. IRRIGATION SLEEVE INSTALLATION SHALL BE ACCOMPLISHED UNDER THIS CONTRACT.
9. PIPE SIZE SHALL BE THE SAME ON BOTH SIDES OF VALVES.
10. LOCATE ALL VALVES WITHIN ONE (1) FOOT OF THE MAINLINE.
11. FIELD VERIFY ALL SPRINKLER HEAD LOCATIONS (FLAGGING) BEFORE TRENCHING.
12. WHERE TWO OR MORE PIPES SHARE THE SAME TRENCH, MAINTAIN A 4" SEPARATION BETWEEN PIPES. DO NOT CROSS PIPES OVER EACH OTHER UNLESS THEY ARE AT 90 DEGREES.
13. IRRIGATION SITE PLAN IS SCHEMATIC. VALVES AND PIPING MAY BE SHOWN IN PAVEMENT AREAS FOR CLARITY. LOCATE ALL VALVES IN LANDSCAPE AREAS AND ROUTE PIPING THROUGH LANDSCAPE AREAS OR UNDER PAVEMENT WHERE SLEEVING IS INDICATED. THE CONTRACTOR SHALL CONSIDER ALL SITE FEATURES IN THE INSTALLATION OF IRRIGATION IMPROVEMENTS AND DELIVER A FULLY OPERATIONAL SYSTEM.
14. ALL IRRIGATION STATIONS SHALL BE TIMED TO OPERATE BETWEEN THE HOURS OF 10:00 P.M. AND 6:00 A.M.

As-Built
7/2/21

Call 811 two business days before you dig

Harry T
Waterfr
Renova

Lakewood Par
Recreation De
Lakewood, WA

Robert V
Landscape A

4405 7th Aven

FAX
E-MAIL
Landsc
Envi
Proj

STATE OF WASHINGTON ROBERT V. ROSATI LICENSED LANDSCAPE ARCHITECT

PROJECT NO.
DRAWING
DESIGNED BY
DRAWN BY
CHECKED BY

REVISION
DATE

DATE:

Irrigatio

L

O:\2018\18021 Harry Todd Park\Drawings\SHEETS\28_L9.0 - Irrigation Modification Plan.dwg
Mar-20-20 8:51am

Provided to Builders Exchange of WA, Inc. For usage Conditions Agreement see www.bxwa.com - Always Verify Scale

Project Site

ADDRESS: 8928 N. THORNE LANE SW, LAKEWOOD, WA 98499

THE PROJECT SITE IS ENTIRELY WITHIN FOUR PARCELS OWNED BY THE CITY OF LAKEWOOD WHICH MAKE UP HARRY TODD PARK. THE TOTAL AREA OF THE FOUR PARCELS IS 630,313 SF. OR 14.47 ACRES.

TOTAL IMPERVIOUS SURFACE AREA ON THE PROJECT SITE: 151,000 SF.

Landscape Improvements General Notes

1. CONTRACTOR IS REQUIRED TO VERIFY EXISTING UTILITY LOCATIONS PRIOR TO CONSTRUCTION.
2. CONTRACTOR SHALL COORDINATE ALL WORK WITH THE GENERAL CONTRACTOR. ALL CONSTRUCTION CONFLICTS SHALL BE BROUGHT TO THE ATTENTION OF THE GENERAL CONTRACTOR AND CONSTRUCTION OBSERVER IMMEDIATELY UPON RECOGNITION.
3. CONTRACTOR IS RESPONSIBLE FOR A THOROUGH CLEAN-UP FOR HIS/HER RESPECTIVE WORK, DAILY AND AT PROJECT CLOSE-OUT.
4. CONTRACTOR IS RESPONSIBLE FOR PROTECTING ALL EXISTING IMPROVEMENTS. DAMAGE TO THE EXISTING IMPROVEMENTS BY THE CONTRACTOR SHALL BE REPAIRED OR REPLACED BY THE CONTRACTOR AND/OR QUALIFIED INSTALLERS/TRADES ACCEPTABLE TO THE SOLE SATISFACTION OF THE CONSTRUCTION OBSERVER AND AT NO COST TO THE OWNER.
5. PRIOR TO SOD INSTALLATION, LAWN AREAS SHALL RECEIVE THE TYPE AND DEPTH OF TOPSOIL AS NOTED IN THE TOPSOIL LEGEND. SHRUB & GROUNDCOVER BEDS SHALL RECEIVE 8 INCHES TOPSOIL TYPE A.
6. SHRUB & GROUNDCOVER BEDS TO RECEIVE 4 INCHES OF MEDIUM GRIND HEM-FIR BARK MULCH, BY OTHERS. 8-INCH DEPTH OF TOPSOIL TYPE A SHALL BE GRADED SMOOTH AND BROUGHT TO A UNIFORM LINE WITH NO SURFACE IRREGULARITIES. SHRUB BEDS' FINISH GRADE AS SHOWN ON PLANS REPRESENTS GRADES FOLLOWING MULCH PLACEMENT AND COMPACTION.
7. STARTER FERTILIZER SHALL BE APPLIED TO ALL SEEDED AREAS.
8. OWNER SHALL ASSUME ALL RESPONSIBILITY FOR MAINTAINING LANDSCAPE AND IRRIGATION IMPROVEMENTS FOR THE LIFE OF THIS PROJECT.

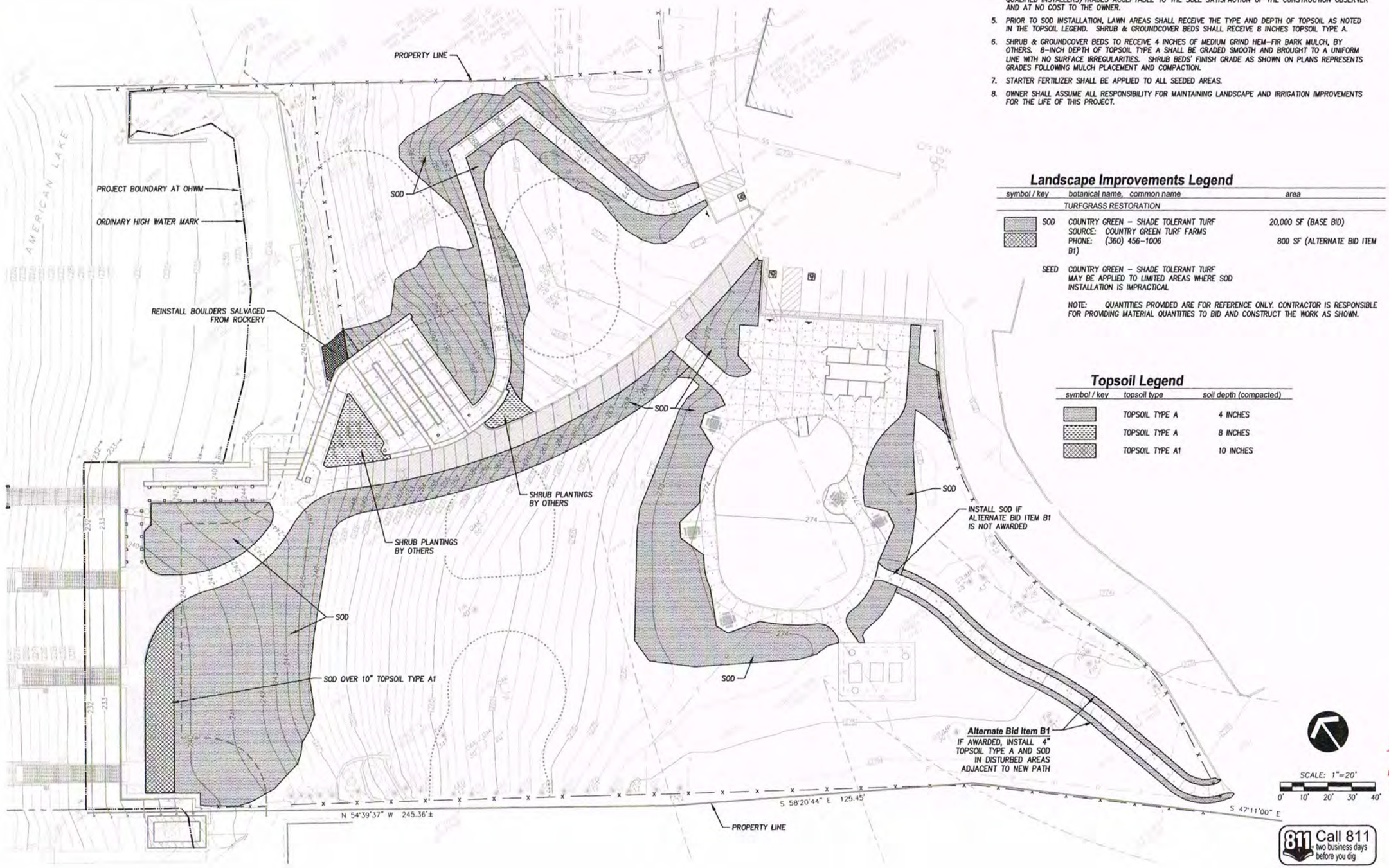

Landscape Improvements Legend

symbol / key	botanical name, common name	area
	TURFGRASS RESTORATION	
SOD	COUNTRY GREEN – SHADE TOLERANT TURF SOURCE: COUNTRY GREEN TURF FARMS PHONE: (360) 456-1006	20,000 SF (BASE BID)
		800 SF (ALTERNATE BID ITEM B1)
SEED	COUNTRY GREEN – SHADE TOLERANT TURF MAY BE APPLIED TO LIMITED AREAS WHERE SOD INSTALLATION IS IMPRACTICAL	

NOTE: QUANTITIES PROVIDED ARE FOR REFERENCE ONLY. CONTRACTOR IS RESPONSIBLE FOR PROVIDING MATERIAL QUANTITIES TO BID AND CONSTRUCT THE WORK AS SHOWN.

Topsoil Legend

symbol / key	topsoil type	soil depth (compacted)
	TOPSOIL TYPE A	4 INCHES
	TOPSOIL TYPE A	8 INCHES
	TOPSOIL TYPE A1	10 INCHES

Harry Todd Park Waterfront Renovation

Lakewood Parks & Recreation Department
Lakewood, WA

Robert W. Droll
Landscape Architect, PS

4405 7th Avenue SE, Ste. 203
Lacey, WA 98503
(360) 456-3813
FAX (360) 493-2063
E-MAIL bob@rwdroll.com

Landscape Architecture
Site Planning
Environmental Design

Urban Design
Land Planning
Project Management

STATE OF WASHINGTON ROBERT W. DROLL NO. 910 EXP. 6/30/2020 LANDSCAPE ARCHITECT

PROJECT NO. 18021
DRAWING
DESIGNED BY BD
DRAWN BY BD, PM
CHECKED BY BD

REVISION

DATE	CHANGE

DATE: MARCH 23, 2020

Landscape Plan

As-Built
7/2/21

L10.0

Provided to Builders Exchange of WA, Inc. For usage Conditions Agreement see www.bxwa.com - Always Verify Scale

SECTION 16, TOWNSHIP 19 NORTH, RANGE 2 EAST, W.M.
PIERCE COUNTY, WASHINGTON

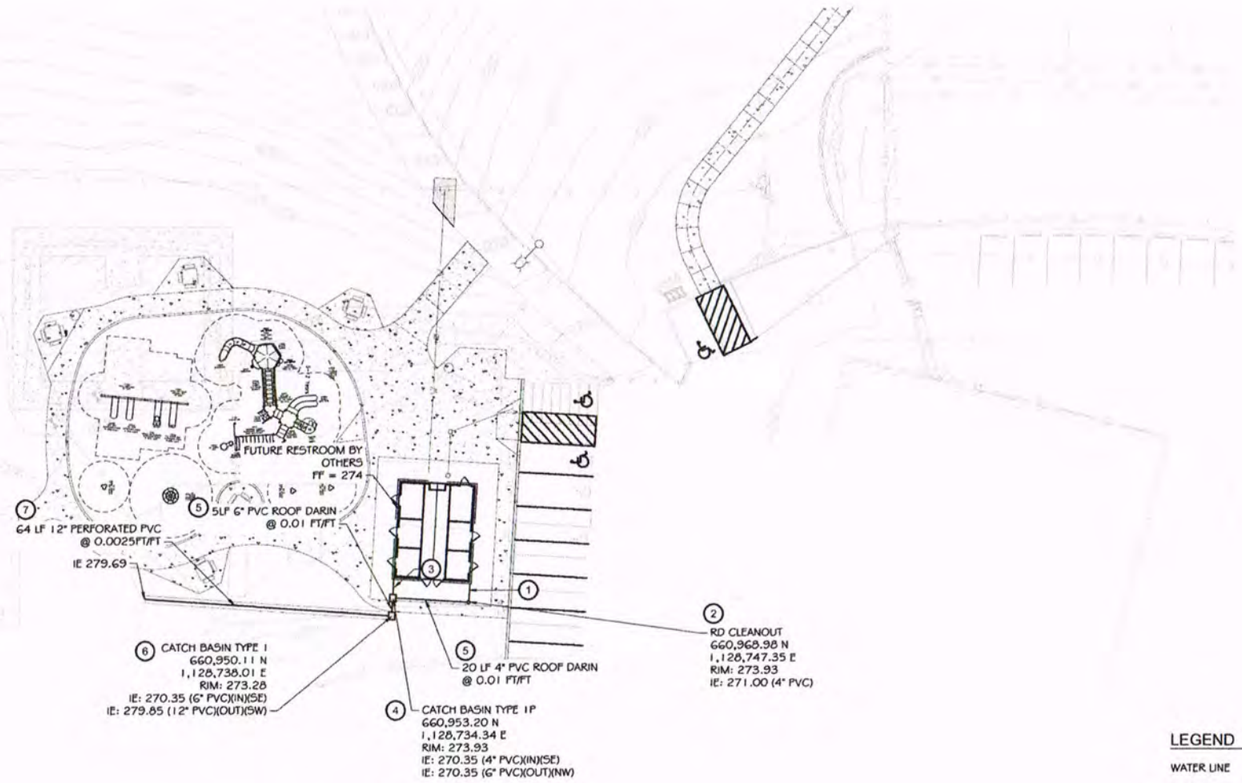

ROOF DRAIN PLAN
1" = 20'

CONSTRUCTION NOTES:

1. CONNECT ROOF FUTURE DOWNSPOUT LEADER TO ROOF DRAIN CLEANOUT
2. INSTALL ROOF DRAIN CLEANOUT PER DETAIL A ON DWG C4.3
3. CONNECT ROOF DOWNSPOUT LEADER TO CATCH BASIN
4. INSTALL CATCH BASIN TYPE 1P WITH SOLID COVER PER CITY OF LAKEWOOD DETAILS SW-03, SW-04, SW-7 ON DWG C4.2 & SW-11 ON DWG C4.3
5. INSTALL PVC ROOF DRAIN
6. INSTALL CATCH BASIN TYPE 1 WITH SOLID COVER PER CITY OF LAKEWOOD DETAILS SW-03, SW-04 & SW-06 ON DWG C4.2
7. INSTALL ROOF DRAIN INFILTRATION TRENCH PER CITY OF LAKEWOOD DETAIL SW-11 ON DWG C4.3

LEGEND

WATER LINE	W
WATER TEE W/ THRUST BLOCKING	
WATER METER	
WATER DOUBLE CHECK VALVE	
SEWER LINE	SS
SEWER MANHOLE	
SEWER CLEANOUT	
ROOF DRAIN LINE	RD
ROOF DRAIN DOWNSPOUT	
STORM CATCH BASIN	
INFILTRATION TRENCH	
BASIN DELINEATION LINE	

0 20 40
SCALE

VERTICAL DATUM
NAVD 88

As-Built
7/2/21

CITY OF LAKEWOOD PUBLIC WORKS DEPARTMENT
APPROVED THIS DAY OF , 20
BY THE CITY OF LAKEWOOD PUBLIC WORKS DEPARTMENT
CITY ENGINEER OR DESIGNEE

NO	DATE	BY	CKD	APPR.	REVISION

MARK R. STEPPY
STATE OF WASHINGTON
34868
REGISTERED PROFESSIONAL ENGINEER
01-14-2020

kpff
612 Woodland Square Loop, Suite 100
Lacey, WA 98503
360.292.7230
www.kpff.com

CALL UNDERGROUND LOCATE TWO (2) WORKING DAYS BEFORE YOU DIG 811

DRAWN BY BNT
DESIGNED BY REH
CHECKED BY REH
APPROVED BY MRS
DATE 1-14-2020
JOB NO: 101818000079

HARRY TODD PARK PHASE 2
CITY OF LAKEWOOD

ROOF DRAIN PLAN

PERMIT DRAWING

C4.1

SHEET 1 OF 3

Provided to Builders Exchange of WA, Inc. For usage Conditions Agreement see www.bxwa.com - Always Verify Scale

SECTION 16, TOWNSHIP 19 NORTH, RANGE 2 EAST, W.M.
PIERCE COUNTY, WASHINGTON

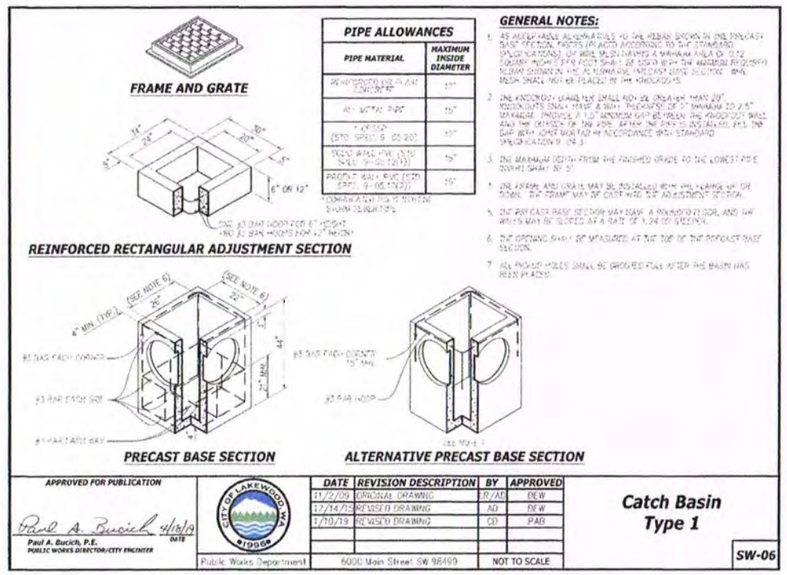

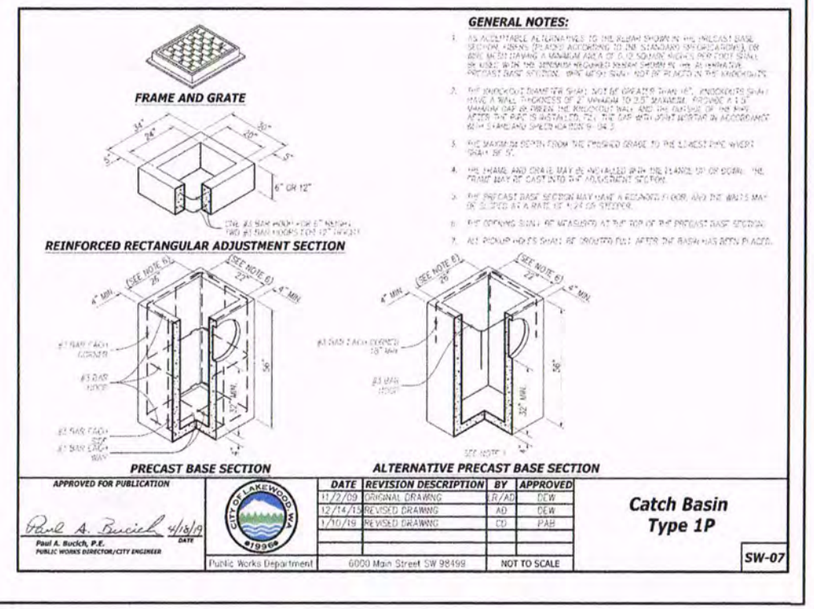

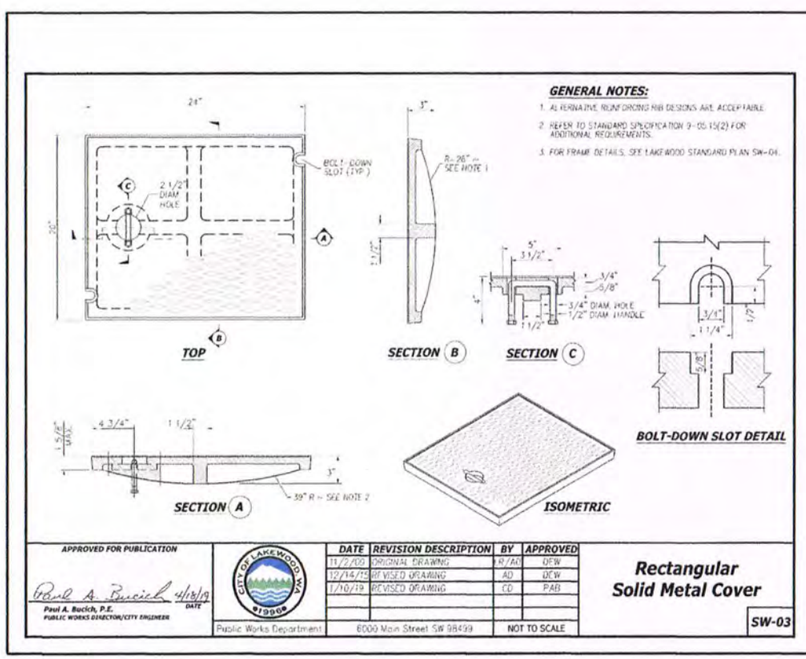

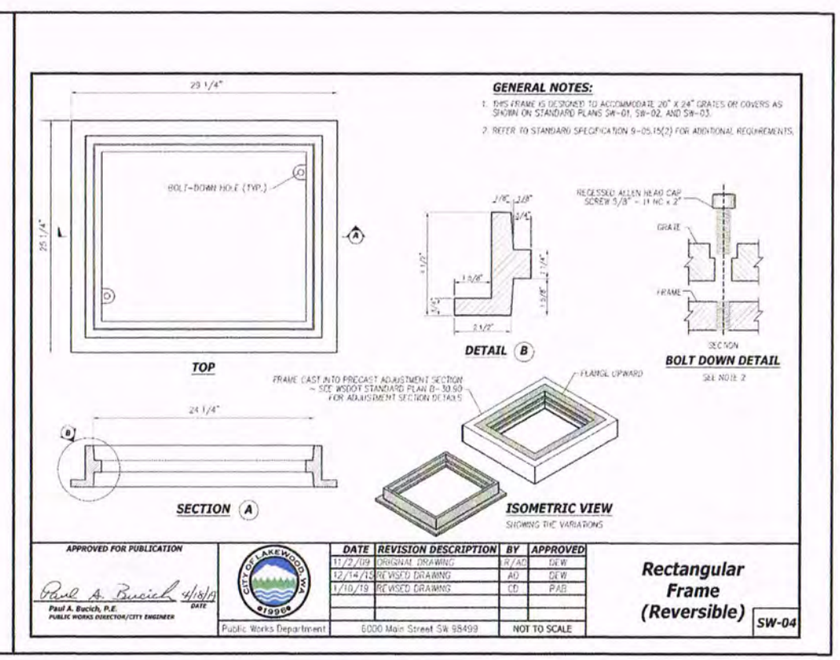

As-Built
7/2/21

CITY OF LAKEWOOD PUBLIC WORKS DEPARTMENT
APPROVED THIS DAY OF , 20
BY THE CITY OF LAKEWOOD PUBLIC WORKS DEPARTMENT
CITY ENGINEER OR DESIGNEE

NO	DATE	BY	CHD	APPR	REVISION

MARK R. STEEPER, STATE OF WASHINGTON, REGISTERED PROFESSIONAL ENGINEER, 01-14-2020

kpff
612 Woodland Square Loop, Suite 100
Lacey, WA 98503
360.357.7230
www.kpff.com

CALL UNDERGROUND LOCATE TWO (2) WORKING DAYS BEFORE YOU DIG 811

DRAWN BY BNT | DESIGNED BY REH
CHECKED BY REH | APPROVED BY MRS
DATE 1-14-2020
JOB NO: 1018.800079

HARRY TODD PARK PHASE 2
CITY OF LAKEWOOD

ROOF DRAIN DETAILS

PERMIT DRAWING
C4.2
SHEET 2 OF 3

SECTION 16, TOWNSHIP 19 NORTH, RANGE 2 EAST, W.M.
PIERCE COUNTY, WASHINGTON

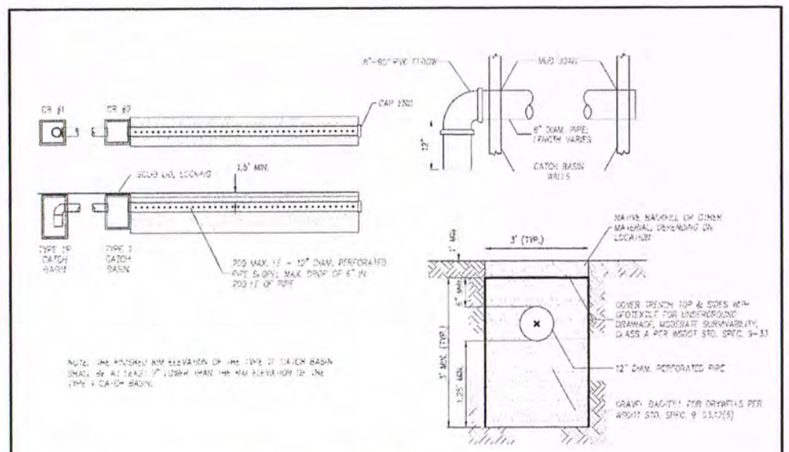

APPROVED FOR PUBLICATION
Paul A. Bucich, P.E. 4/18/19 DATE
PUBLIC WORKS DIRECTOR/CITY ENGINEER

DATE	REVISION DESCRIPTION	BY	APPROVED
11/2/09	ORIGINAL DRAWING	JR/AD	DFW
2/8/11	REVISED DRAWING	TRN	DFW
12/14/15	REVISED DRAWING	AD	DFW
6/7/16	REVISED DRAWING	TP/AD	GY
1/10/19	REVISED DRAWING	CD	PAB
	6000 Main Street SW 98499	NOT TO SCALE	

Public Works Department

Standard Infiltration Trench Detail

SW-11

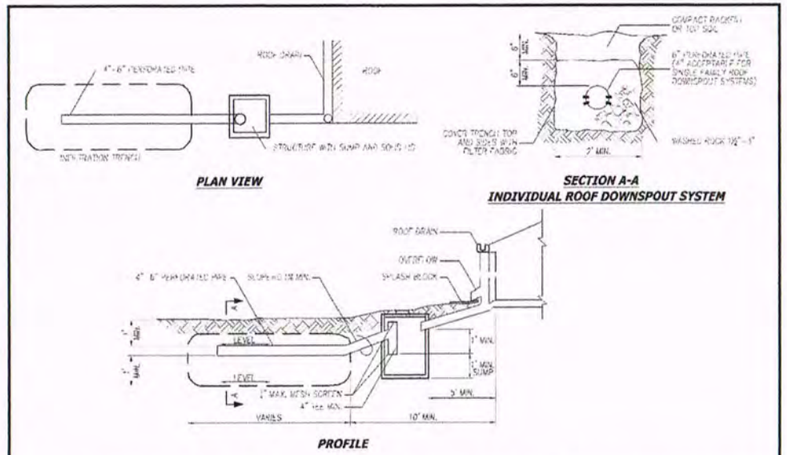

APPROVED FOR PUBLICATION
Paul A. Bucich, P.E. 4/18/19 DATE
PUBLIC WORKS DIRECTOR/CITY ENGINEER

DATE	REVISION DESCRIPTION	BY	APPROVED
11/2/09	ORIGINAL DRAWING	JR/AD	DCW
12/14/15	REVISED DRAWING	AD	DEW
1/10/19	CHANGED SHEET NUMBER	CD	PAB
	6000 Main Street SW 98499	NOT TO SCALE	

Public Works Department

Individual Roof Downspout System

SW-12

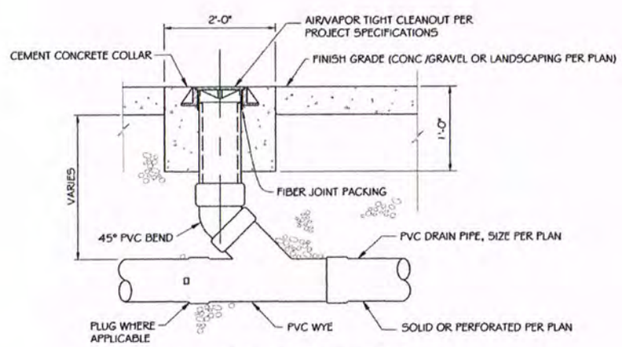

A ROOF DRAIN CLEANOUT
SCALE: NTS

As-Built
7/2/21

CITY OF LAKEWOOD PUBLIC WORKS DEPARTMENT
APPROVED THIS DAY OF , 20
BY THE CITY OF LAKEWOOD PUBLIC WORKS DEPARTMENT
CITY ENGINEER OR DESIGNEE

NO	DATE	BY	CHD	APPR	REVISION

MARK R. STEEPY, STATE OF WASHINGTON, REGISTERED PROFESSIONAL ENGINEER, 01-14-2020

kpff
612 Woodland Square Loop, Suite 100
Lacey, WA 98503
360.292.7230
www.kpff.com

CALL UNDERGROUND LOCATE TWO (2) WORKING DAYS BEFORE YOU DIG 811

DRAWN BY BNT | DESIGNED BY REH
CHECKED BY REH | APPROVED BY MRS
DATE 1-14-2020
JOB NO: 10181800079

HARRY TODD PARK PHASE 2
CITY OF LAKEWOOD

ROOF DRAIN DETAILS

PERMIT DRAWING
C4.3
SHEET 3 OF 3

Provided to Builders Exchange of WA, Inc. For usage Conditions Agreement see www.bxwa.com - Always Verify Scale

SECTION 16, TOWNSHIP 19 NORTH, RANGE 2 EAST, W.M.
PIERCE COUNTY, WASHINGTON

HARRY TODD PARK

PHASE 2

SEWER PLANS

LAKEWOOD, WASHINGTON

SHEET INDEX		
SHEET	DWG.	TITLE
1	S1.0	COVER SHEET
2	S1.1	SEWER PLAN & PROFILE
3	S1.2	SEWER NOTES & DETAILS

PLAN APPROVAL EXPIRES THREE (3) YEARS FORM THE DATE OF APPROVAL

VICINITY MAP
NTS

OWNER / APPLICANT:

CITY OF LAKEWOOD
PARKS AND RECREATION DEPARTMENT
6000 MAIN STREET, SW
LAKEWOOD, WA 98499
TEL : (253) 983-7887
COparks@cityoflakewood.us

CIVIL ENGINEER/REPRESENTATIVE:

KPFF CONSULTING ENGINEERS
612 WOODLAND SQUARE LOOP SE, SUITE 100
LACEY, WA 98503
TEL: (360) 292-7230
FAX: (360) 292-7231
CONTACT: MARK STEEPY, PE
mark.steepy@kpff.com

SURVEY:

KPFF CONSULTING ENGINEERS
612 WOODLAND SQUARE LOOP SE, SUITE 100
LACEY, WA 98503
TEL: (360) 292-7230
FAX: (360) 292-7231
CONTACT: JEREME CHAPMAN, PLS
jereme.chapman@kpff.com
DATE OF SURVEY: 07/26/2018

SITE DATA:

ADDRESS:
8928 N THORNE LANE
LAKEWOOD, WA 98499

PARCEL NUMBER:
220000021

TOTAL ACREAGE:
10.31 ACRES

PROPOSED USE:
PARK

ZONING:
OPEN SPACE & RECREATION ONE

WATER SERVICE PROVIDER:
LAKEWOOD WATER DISTRICT

SEWER SERVICE PROVIDER:
PIERCE COUNTY

NOTE: THIS SITE IS NOT LOCATED IN A 100 YEAR FLOOD PLAIN

DATUM BASED ON NAVD 88

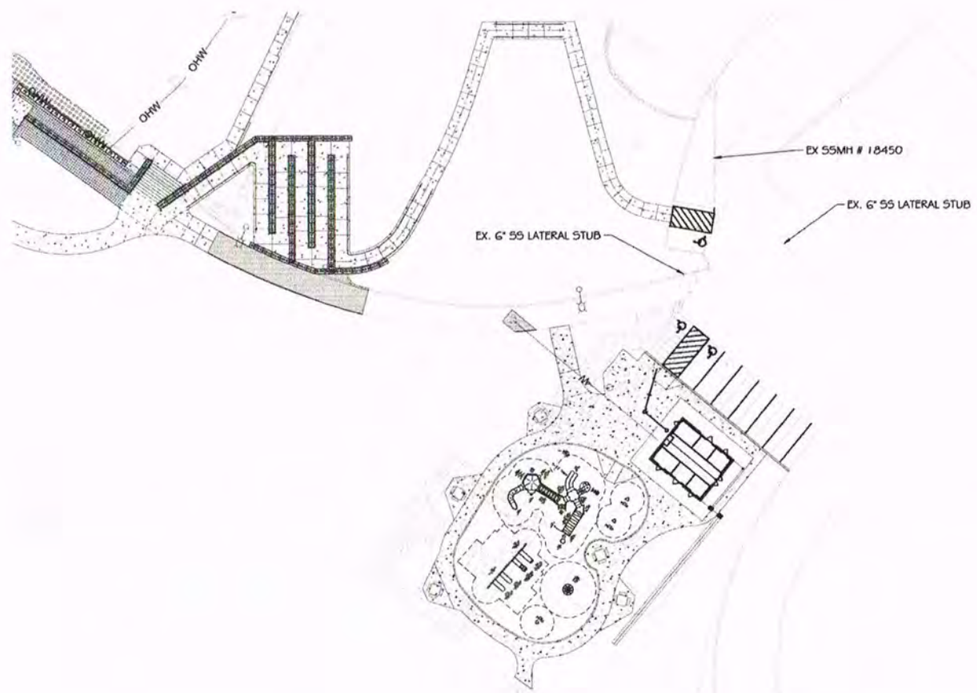

SITE PLAN
SCALE: 1" = 40'

As-Built
7/2/21

0 40 80
SCALE

VERTICAL DATUM
NAVD 88

NO	DATE	BY	CHD	APPR.	REVISION

kpff
612 Woodland Square Loop, Suite 100
Lacey, WA 98503
360.292.7230
www.kpff.com

CALL UNDERGROUND LOCATE TWO (2) WORKING DAYS BEFORE YOU DIG 811

DRAWN BY BNT
DESIGNED BY REH
CHECKED BY MRS
APPROVED BY MRS
DATE 01-14-2020
JOB NO. 1019.B00079

HARRY TODD PARK PHASE 2
LAKEWOOD, WASHINGTON

COVER SHEET

PERMIT DRAWING

S1.0

SHEET 1 OF 3

Provided to Builders Exchange of WA, Inc. For usage Conditions Agreement see www.bxwa.com - Always Verify Scale

SECTION 16, TOWNSHIP 19 NORTH, RANGE 2 EAST, W.M.
PIERCE COUNTY, WASHINGTON

PLAN APPROVAL EXPIRES THREE (3) YEARS FORM THE DATE OF APPROVAL

GENERAL NOTES (SANITARY SEWER MAIN INSTALLATION)

1. ALL MATERIALS, WORKMANSHIP, AND TESTING SHALL BE IN ACCORDANCE WITH THE REQUIREMENTS OF THE LATEST EDITION OF THE PIERCE COUNTY SANITARY SEWER STANDARD SPECIFICATIONS, THE PIERCE COUNTY SANITARY SEWER STANDARD DETAILS MANUAL AND THE PIERCE COUNTY SEWER UTILITY ADMINISTRATIVE CODE.
2. THE CONTRACTOR SHALL NOTIFY THE DESIGN ENGINEER AND THE PIERCE COUNTY SEWER DIVISION INSPECTOR IN THE EVENT OF DISCOVERY OF POOR SOILS, STANDING GROUND WATER OR DISCREPANCIES FROM THE PLANS IN GRADES, LOCATIONS AND CONSTRUCTION OF UTILITIES, STRUCTURES, AND OTHER EXISTING CONDITIONS.
3. THE CONTRACTOR SHALL VERIFY LOCATION AND ELEVATION OF THE POINT OF CONNECTION PRIOR TO CONSTRUCTION.
4. TESTING BY AIR OR WATER EX-FILTRATION IS REQUIRED ON ALL SEWERS INCLUDING DRY LINES, AND VACUUM TESTING IS REQUIRED ON ALL MANHOLES. PIERCE COUNTY DEPARTMENT OF PUBLIC WORKS REQUIRES A MINIMUM 24-HOUR ADVANCED NOTICE FOR SITE INSPECTION.
5. THE CONTRACTOR SHALL BE REGISTERED WITH THE PIERCE COUNTY DEPARTMENT OF PUBLIC WORKS AND HAVE A VALID $5,000.00 STREET OBSTRUCTION BOND.
6. PIERCE COUNTY DEPARTMENT OF PUBLIC WORKS REQUIRES THAT THE OWNER OR THE OWNER'S REPRESENTATIVE, THE ENGINEER AND THE CONTRACTOR ATTEND A PRE-CONSTRUCTION CONFERENCE WITH THE PIERCE COUNTY SEWER UTILITY INSPECTOR FOR ALL WORK ON THESE PLANS. THE CONFERENCE SHOULD BE SCHEDULED BY CALLING 253.798.4050 A MINIMUM OF TWO WEEKS PRIOR TO COMMENCEMENT OF WORK.
7. IT SHALL BE THE RESPONSIBILITY OF THE OWNER/DEVELOPER/CONTRACTOR TO OBTAIN NECESSARY PERMITS, CONSTRUCTION EASEMENTS AND RELEASES.
8. ANY REVISIONS TO THESE PLANS, ONCE APPROVED BY PIERCE COUNTY DEPARTMENT OF PUBLIC WORKS MUST BE REVIEWED AND RE-APPROVED BY PIERCE COUNTY DEPARTMENT OF PUBLIC WORKS ENGINEERING SECTION PRIOR TO IMPLEMENTATION IN THE FIELD.
9. IT SHALL BE THE RESPONSIBILITY OF THE CONTRACTOR TO HAVE A SET OF THESE APPROVED PLANS ON THE JOB SITE WHENEVER CONSTRUCTION IS IN PROGRESS.
10. SIDE SEWER STUBS SHALL BE INSTALLED AT LEAST 10 FEET FROM PROPERTY LINES, UNLESS OTHERWISE APPROVED BY PIERCE COUNTY PUBLIC WORKS ENGINEERING SECTION.
11. ALL MANHOLES LOCATED IN NON-PAVED AREAS OR LOW POINTS OF VERTICAL CURVES SHALL HAVE WATERTIGHT LOCKING LIDS AND CONCRETE COLLARS.
12. ALL NEW MANHOLES WILL BE PRE-CHANNELED IN ALL QUADRANTS WITH PIERCE COUNTY APPROVED MANHOLE INVERT LINERS, UNLESS OTHERWISE NOTED.
13. THE STANDARD VERTICAL SEPARATION FOR WATER LINES IS 1.5 FEET ABOVE THE SEWER LINE AND 1.5 FEET FOR ALL OTHER UTILITIES (SEPARATION SHALL BE MEASURED FROM THE OUTER WALL OF THE PIPES). CONCRETE ENCASEMENT WILL BE ALLOWED FOR WATER MAINS CROSSING AT LESS THAN 1.5 FEET BUT NO CLOSER THAN 0.75 FEET. FOR OTHER UTILITIES A 0.75 FOOT CLEARANCE WILL BE ALLOWED. IF STANDARD CLEARANCES CANNOT BE OBTAINED, THEN EITHER THE SANITARY SEWER SHALL BE CONCRETE ENCASED OR CLASS 52 DUCTILE IRON PIPE SHALL BE USED. IF THE PIPE IS ENCASED, IT SHALL BE ENCASED 10 FEET ON EACH SIDE OF THE CROSSING. IF CLASS 52 DUCTILE IRON PIPE IS USED FOR THE SEWER NO TRANSITIONING TO OTHER PIPE MATERIALS WILL BE ALLOWED BETWEEN MANHOLES.
14. THE MINIMUM HORIZONTAL SEPARATION BETWEEN SEWER AND WATER MAINS SHALL BE 10 FEET. SEPARATION SHALL BE MEASURED FROM THE OUTER WALL OF THE PIPES.
15. TEES SHALL BE USED FOR ALL SIDE SEWER CONNECTIONS TO SEWER MAINLINES.
16. THE INTERIOR OF ALL DUCTILE IRON PIPE SHALL BE LINED PER PIERCE COUNTY SANITARY SEWER SPECIFICATIONS.
17. THE INTERIOR AND EXTERIOR WALLS OF ALL MANHOLES FOR INTERCEPTOR SEWERS (15" NOMINAL INSIDE DIAMETER AND LARGER) SHALL BE COATED PER PIERCE COUNTY SANITARY SEWER SPECIFICATIONS.
18. THE MINIMUM LENGTH OF CONCRETE ENCASEMENT SHALL BE 20 LINEAR FEET.
19. CONCRETE MANHOLES THAT ARE TAPPED FOR A FORCE MAIN CONNECTION SHALL HAVE THEIR INTERIORS RECEIVE PROTECTIVE COATINGS PER PIERCE COUNTY SPECIFICATIONS.

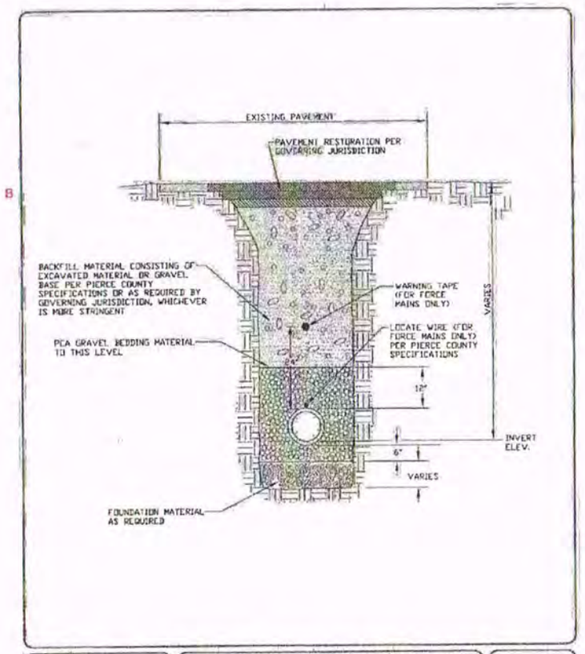

KARL FRANK AMLIG — STATE OF WASHINGTON — 32168 — REGISTERED PROFESSIONAL ENGINEER

PIERCE COUNTY PUBLIC WORKS & UTILITIES DEPARTMENT
SEWER UTILITY DIVISION
9850 64TH STREET WEST
UNIVERSITY PLACE, WASHINGTON 98467-1078
(253) 798-4050

STANDARD DETAILS

DATE 05/01/2011
SCALE NTS

TYPICAL TRENCH SECTION

STANDARD DETAIL NO. 3001
PAGE 1 OF 1

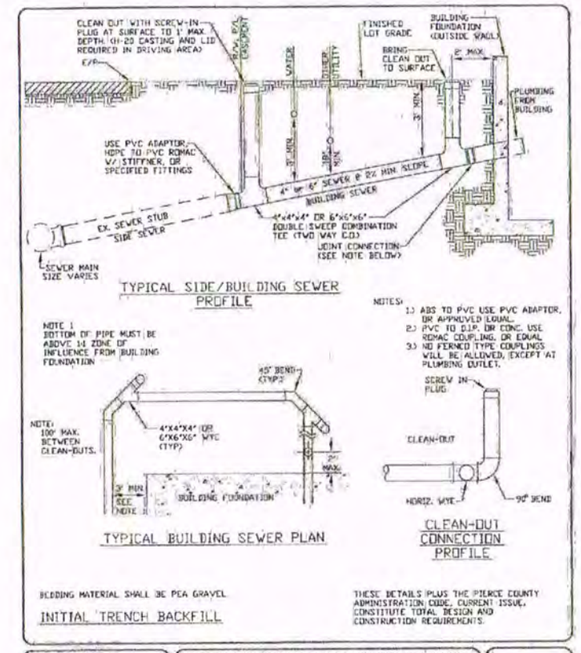

THESE DETAILS PLUS THE PIERCE COUNTY ADMINISTRATION CODE, CURRENT ISSUE, CONSTITUTE TOTAL DESIGN AND CONSTRUCTION REQUIREMENTS.

KARL FRANK AMLIG — STATE OF WASHINGTON — 32168 — REGISTERED PROFESSIONAL ENGINEER

PIERCE COUNTY PUBLIC WORKS & UTILITIES DEPARTMENT
SEWER UTILITY DIVISION
9850 64TH STREET WEST
UNIVERSITY PLACE, WASHINGTON 98467-1078
(253) 798-4050

STANDARD DETAILS

DATE 05/01/2011
SCALE NTS

BUILDING SEWER LAYOUT

STANDARD DETAIL NO. 4001
PAGE 1 OF 2

As-Built
7/2/21

NO	DATE	BY	CHD	APPR	REVISION

MARK R. STEPP — STATE OF WASHINGTON — 34860 — REGISTERED PROFESSIONAL ENGINEER — 01-14-2020

kpff
612 Woodland Square Loop, Suite 100, SE
Lacey, WA 98503
360.292.7230
www.kpff.com

CALL UNDERGROUND LOCATE TWO (2) WORKING DAYS BEFORE YOU DIG 811

DRAWN BY BNT | DESIGNED BY REH
CHECKED BY REH | APPROVED BY MRS
DATE 01-14-2020
JOB NO. 1018600079

HARRY TODD PARK PHASE 2
LAKEWOOD, WASHINGTON

DETAILS & NOTES

PERMIT DRAWING

S1.2

SHEET 3 OF 3

Provided to Builders Exchange of WA, Inc. For usage Conditions Agreement see www.bxwa.com - Always Verify Scale

SECTION 16, TOWNSHIP 19 NORTH, RANGE 2 EAST, W.M.
PIERCE COUNTY, WASHINGTON

PLAN APPROVAL EXPIRES THREE (3) YEARS FORM THE DATE OF APPROVAL

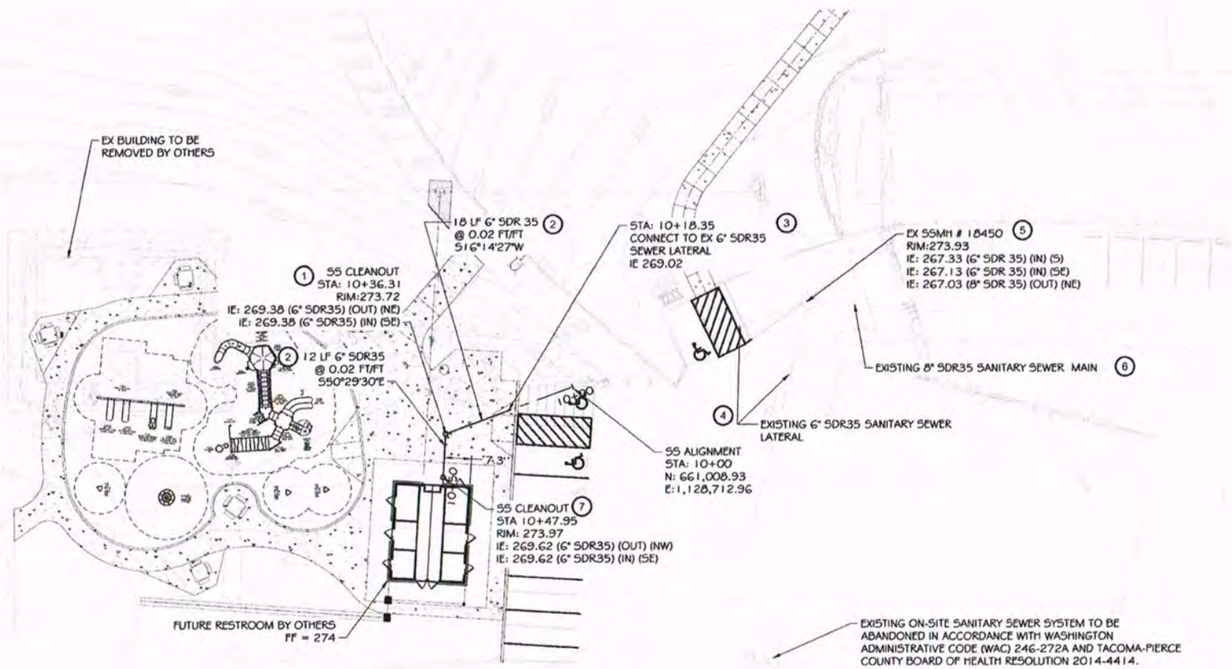

SEWER PLAN VIEW
1" = 20'

CONSTRUCTION NOTES:

1. INSTALL SANITARY SEWER CLEANOUT PER PIERCE COUNTY STANDARD DETAIL 4001 ON DWG S1.2
2. INSTALL SDR35 SANITARY SEWER LATERAL PER PIERCE COUNTY STANDARD DETAIL 3001 ON DWG S1.2
3. CONNECT NEW SDR35 SANITARY SEWER LATERAL TO EXISTING SDR35 SANITARY SEWER LATERAL. CONTRACTOR TO VERIFY LOCATION & DEPTH OF THE EXISTING SANITARY SEWER MAIN.
4. EXISTING SDR35 SANITARY SEWER LATERAL TO REMAIN
5. EXISTING SANITARY SEWER MANHOLE TO REMAIN
6. EXISTING SDR35 SANITARY SEWER MAIN TO REMAIN
7. INSTALL SANITARY SEWER CLEANOUT PER PIERCE COUNTY STANDARD DETAIL 4001 ON DWG S1.2 FOR FUTURE CONNECTION OF THE PROPOSED RESTROOM INSTALL CAP ON THE CLEANOUT.

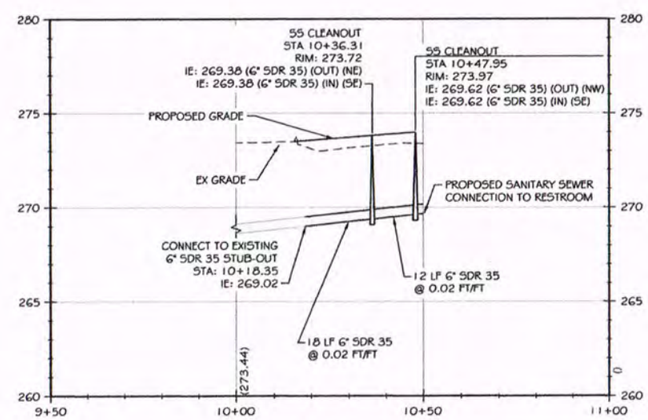

SEWER PROFILE VIEW
HORZ SCALE: 1" = 20' - VERT SCALE: 1" = 4'

LEGEND

WATER LINE	W
WATER TEE W/ THRUST BLOCKING	
WATER METER	
WATER DOUBLE CHECK VALVE	
SEWER LINE	SS
SEWER MANHOLE	
SEWER CLEANOUT	
ROOF DRAIN LINE	
ROOF DRAIN DOWNSPOUT	
STORM CATCH BASIN	
INFILTRATION TRENCH	

As-Built
7/2/21

0 20 40
SCALE

VERTICAL DATUM NAVD 88

NO	DATE	BY	CHD	APPR	REVISION

MARK R. STEEPY, STATE OF WASHINGTON, REGISTERED PROFESSIONAL ENGINEER, 01-14-2020

kpff
612 Woodland Square Loop, Suite 100
Lacey, WA 98503
360.252.7230
www.kpff.com

CALL UNDERGROUND LOCATE TWO (2) WORKING DAYS BEFORE YOU DIG 811

DRAWN BY BNT | DESIGNED BY REH | CHECKED BY MRS | APPROVED BY MRS | DATE 01-14-2020 | JOB NO: 10181800079

HARRY TODD PARK PHASE 2
LAKEWOOD, WASHINGTON

SEWER PLAN & PROFILE

PERMIT DRAWING
S1.1
SHEET 2 OF 3

Provided to Builders Exchange of WA, Inc. For usage Conditions Agreement see www.bxwa.com - Always Verify Scale

SECTION 16, TOWNSHIP 19 NORTH, RANGE 2 EAST, W.M.
PIERCE COUNTY, WASHINGTON

HARRY TODD PARK

PHASE 2

WATER PLANS

LAKEWOOD, WASHINGTON

SHEET INDEX		
SHEET	DWG.	TITLE
1	W1.0	COVER SHEET & GENERAL NOTES
2	W1.1	WATER PLAN
3	W1.2	WATER DETAILS

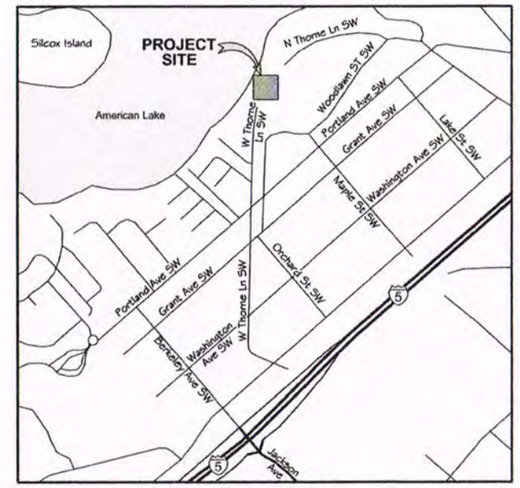

VICINITY MAP
NTS

OWNER / APPLICANT:

CITY OF LAKEWOOD
PARKS AND RECREATION DEPARTMENT
6000 MAIN STREET, SW
LAKEWOOD, WA 98499
TEL : (253) 983-7887
COparks@cityoflakewood.us

CIVIL ENGINEER/REPRESENTATIVE:

KPFF CONSULTING ENGINEERS
612 WOODLAND SQUARE LOOP SE, SUITE 100
LACEY, WA 98503
TEL: (360) 292-7230
FAX: (360) 292-7231
CONTACT: MARK STEEPY, PE
mark.steepy@kpff.com

SURVEY:

KPFF CONSULTING ENGINEERS
612 WOODLAND SQUARE LOOP SE, SUITE 100
LACEY, WA 98503
TEL: (360) 292-7230
FAX: (360) 292-7231
CONTACT: JEREME CHAPMAN, PLS
jereme.chapman@kpff.com
DATE OF SURVEY: 07/26/2018

SITE DATA:

ADDRESS:
8928 N THORNE LANE
LAKEWOOD, WA 98499

PARCEL NUMBER:
220000021

TOTAL ACREAGE:
10.31 ACRES

PROPOSED USE:
PARK

ZONING:
OPEN SPACE & RECREATION ONE

WATER SERVICE PROVIDER:
LAKEWOOD WATER DISTRICT

SEWER SERVICE PROVIDER:
PIERCE COUNTY

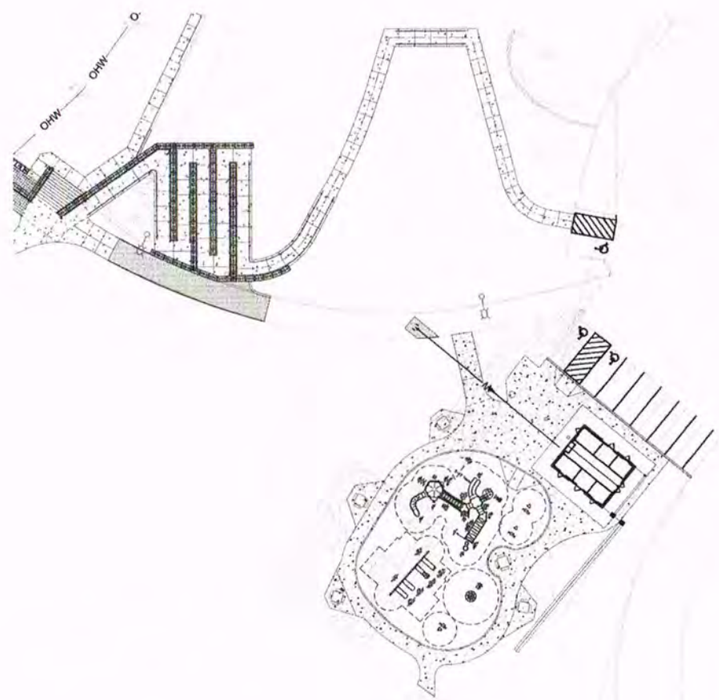

SITE PLAN
SCALE: 1" = 30

GENERAL NOTES

1. REFER TO THE DEVELOPER'S EXTENSION AGREEMENT DESIGN/CONSTRUCTION SPECIFICATIONS & STANDARDS ON THE DISTRICT'S WEBSITE AT HTTP://WWW.LAKEWOOD-WATER-DIST.ORG/PUBLICATIONS/FORMS.
2. LAKEWOOD WATER DISTRICT REQUIRES TWO SETS OF PLANS FOR REVIEW AND FIVE SETS ONCE APPROVED.
3. ONCE THE DISTRICT REVIEWS, REDLINES, AND RETURNS THE PLANS TO A DEVELOPER/CONTRACTOR, A CORRECTED COPY MUST BE SUBMITTED TO THE DISTRICT PRIOR TO FINAL ACCEPTANCE OF THE JOB.
4. LAKEWOOD WATER DISTRICT DOES ALL WATER TAPS ON EXISTING WATER MAINS AND PROVIDES WATER LINE UP TO THE PROPERTY LINE.
5. LAKEWOOD WATER DISTRICT WILL INSTALL ALL RESIDENTIAL WATER SERVICES OFF THE EXISTING OR NEW WATER MAIN.
6. LAKEWOOD WATER DISTRICT REQUIRES THE USE OF:
   A. DOMESTIC, LOW-LEAD BRASS FITTINGS ONLY FOR MATER MAINS AND SERVICES
   B. MUELLER OR AVK VALVES
   C. NST FIRE HYDRANTS
   D. MUELLER OR FORD SERVICE MATERIALS
7. A DISTRICT INSPECTOR MUST BE PRESENT FOR ALL PHASES OF WATER MAIN INSTALLATION AND FIRE LINE INSTALLATION UP TO THE PIV OR DCVA (DOUBLE CHECK VALVE ASSEMBLY), UNLESS THE DISTRICT IS INSTALLING THESE ASSETS.
8. PREMISE ISOLATION (BACKFLOW DEVICE) IS REQUIRED ON ALL NEW SERVICE LINE INSTALLATIONS, AND A PERMIT MUST BE OBTAINED FROM THE DISTRICT OFFICE PRIOR TO INSTALLATION. AN ANNUAL TEST OF THE BACKFLOW DEVICE WILL BE REQUIRED.
9. A 20 FOOT WIDE UTILITY EASEMENT IS REQUIRED FOR ALL WATER MAINS IN PRIVATE DEVELOPMENT OR WHERE CROSSING A THIRD PARTY'S PROPERTY.
10. THE DEVELOPER OR CONTRACTOR IS RESPONSIBLE FOR ALL SURVEYING NECESSARY FOR THE INSTALLATION OF THE WATER MAIN, WATER SERVICES, FIRE HYDRANTS, AND FIRE LINE ALIGNMENT STAKING.
11. A COMPLETE WALK THROUGH INSPECTION OF ALL WATER UTILITIES BY THE DISTRICT IS REQUIRED AFTER PAVING IS COMPLETED AND PRIOR TO THE DISTRICT SIGNING OFF ON THE PROJECT.
12. A PERFORMANCE BOND WILL BE REQUIRED FOR ALL WORK NOT INSTALLED BY THE DISTRICT. UPON COMPLETION OF THE WORK, THIS BOND WILL REVERT INTO A MAINTENANCE BOND FOR 15% OF THE ORIGINAL VALUE OF THE WORK AND WILL REMAIN IN PLACE FOR ONE YEAR AFTER THE FINAL ACCEPTANCE BY THE DISTRICT.

As-Built
7/2/21

N

0 30 60
SCALE

VERTICAL DATUM
NAVD 88

NO	DATE	BY	CHD	APPR	REVISION

MARK R. STEEPY
STATE OF WASHINGTON
54453
REGISTERED PROFESSIONAL ENGINEER
01-14-2020

kpff
612 Woodland Square Loop, Suite 100
Lacey, WA 98503
360.292.7230
www.kpff.com

CALL UNDERGROUND
LOCATE TWO (2) WORKING DAYS BEFORE YOU DIG
811

DRAWN BY BNT
DESIGNED BY REH
CHECKED BY OVER SHEETS
APPROVED BY
DATE 01-14-2020
JOB NO. 1018180079

HARRY TODD PARK PHASE 2
CITY OF LAKEWOOD

COVER SHHET & GENERAL NOTES

PERMIT DRAWING

W1.0

SHEET 1 OF 3

Provided to Builder Exchange of WA, Inc. For usage Conditions Agreement see www.bxwa.com - Always Verify Scale

SECTION 16, TOWNSHIP 19 NORTH, RANGE 2 EAST, W.M.
PIERCE COUNTY, WASHINGTON

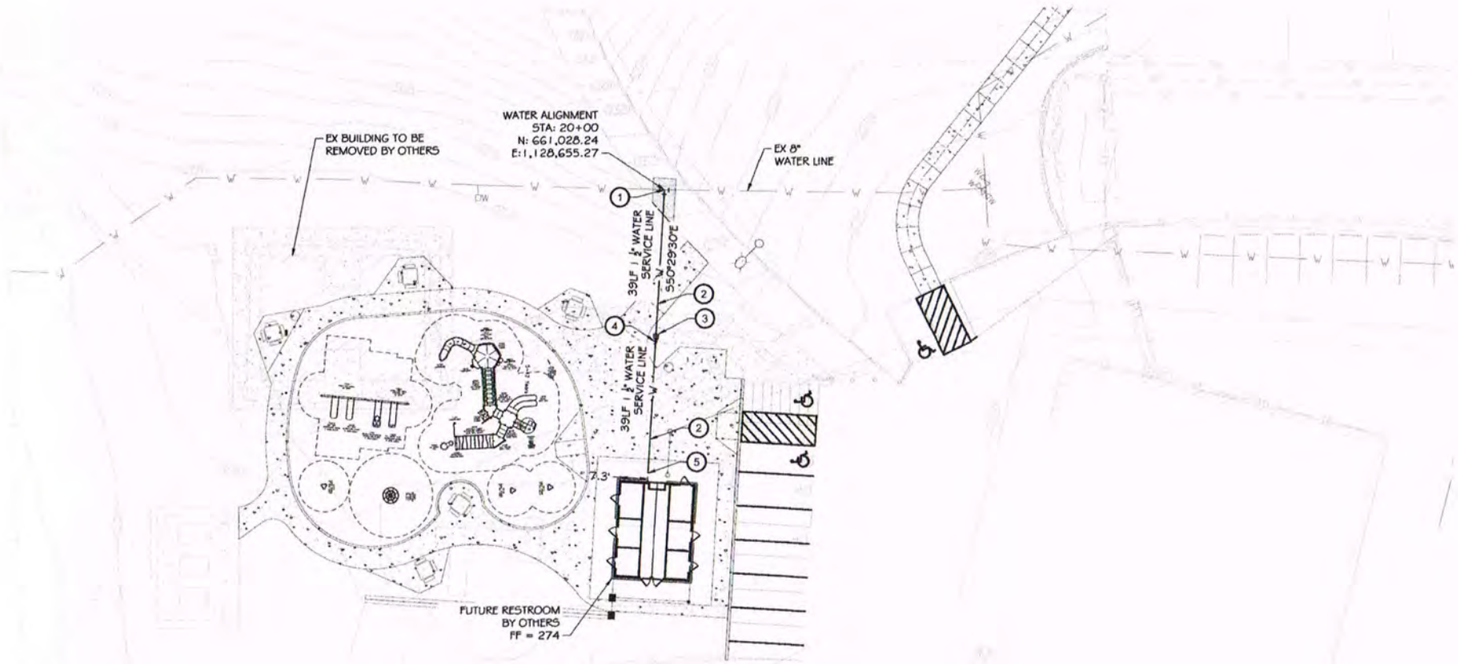

WATER PLAN VIEW
1" = 20'

CONSTRUCTION NOTES:

1. INSTALL SERVICE SADDLE PER LAKEWOOD WATER DISTRICT DETAIL 7B ON DWG W1.2
2. INSTALL PVC WATER SERVICE LINE PER LAKEWOOD WATER DISTRICT DETAIL 6 ON DWG W1.2
3. INSTALL 1 1/2" WATER METER PER LAKEWOOD WATER DISTRICT DETAIL 7B ON DWG W1.2
4. INSTALL UNDERGROUND DOUBLE-CHECK VALVE PER LAKEWOOD WATER DISTRICT STANDARD DETAIL 16 ON DWG W1.2
5. END WATER SERVICE LINE 2.5' FROM FUTURE RESTROOM FOR FUTURE CONNECTION TO RESTROOM

LEGEND

WATER LINE	W
WATER TEE W/ THRUST BLOCKING	
WATER METER	
WATER DOUBLE CHECK VALVE	
SEWER LINE	SS
SEWER MANHOLE	
SEWER CLEANOUT	
ROOF DRAIN LINE	RD
ROOF DRAIN DOWNSPOUT	
STORM CATCH BASIN	
INFILTRATION TRENCH	

As-Built
7/2/21

0 20 40
SCALE

VERTICAL DATUM
NAVD 88

NO.	DATE	BY	CHD	APPR.	REVISION

MARK R. STREPP
STATE OF WASHINGTON
54463
REGISTERED PROFESSIONAL ENGINEER
01-14-2020

kpff
612 Woodland Square Loop, Suite 100
Lacey, WA 98503
360.292.7230
www.kpff.com

CALL UNDERGROUND
LOCATE TWO (2) WORKING DAYS BEFORE YOU DIG
811

DRAWN BY: BNT
DESIGNED BY: REH
CHECKED BY: MRS
APPROVED BY: MRS
DATE: 01-14-2020
JOB NO: 1018.800079

HARRY TODD PARK PHASE 2
CITY OF LAKEWOOD

WATER PLAN

PERMIT DRAWING

W1.1

SHEET 2 OF 3

SECTION 16, TOWNSHIP 19 NORTH, RANGE 2 EAST, W.M.
PIERCE COUNTY, WASHINGTON

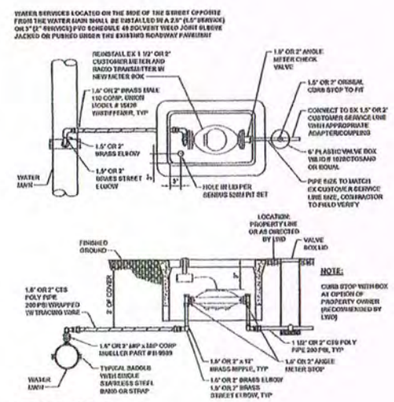

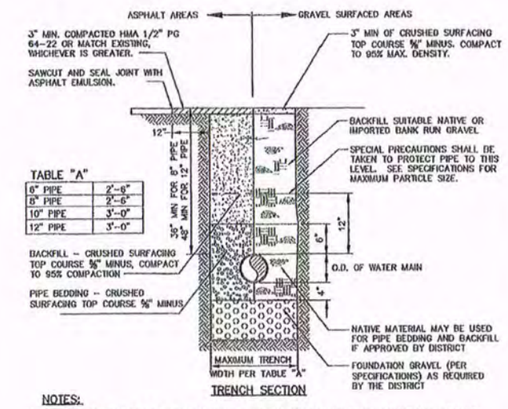

TABLE "A"

6" PIPE	2'-6"
8" PIPE	2'-6"
10" PIPE	3'-0"
12" PIPE	3'-0"

NOTES:

1. BEDDING REQUIRED ONLY IF DIRECTED BY THE DISTRICT DUE TO NATIVE SOIL CONDITIONS. BEDDING SHALL BE ⅝" CRUSHED SURFACING IF NATIVE MATERIAL IS JUDGED UNSUITABLE BY THE DISTRICT. BEDDING UNDER ASPHALT OR CONCRETE PAVEMENT AREAS SHALL BE CRUSHED ROCK ⅝" MINUS.
2. PUMPING SOILS SHALL BE REMOVED FROM THE TRENCH BACKFILL IMMEDIATELY.
3. TEMPORARY PATCH TO BE BACKFILLED AND COMPACTED TO EXISTING GROUND LINE AND PATCHED WITH HMA ½" PG 64-22 TEMPORARY PATCH 2" THICK.
4. BACKFILL MATERIAL PLACED IN 6" LIFTS AND COMPACTED TO 95% MAXIMUM DENSITY. BACKFILL SHALL BE CRUSHED ROCK ⅝" MINUS UNDER ASPHALT OR CONCRETE PAVEMENT AND NATIVE MATERIAL IN GRAVEL AREAS IF APPROVED BY THE DISTRICT.

6 TYPICAL TRENCH SECTION

LAKEWOOD WATER DISTRICT

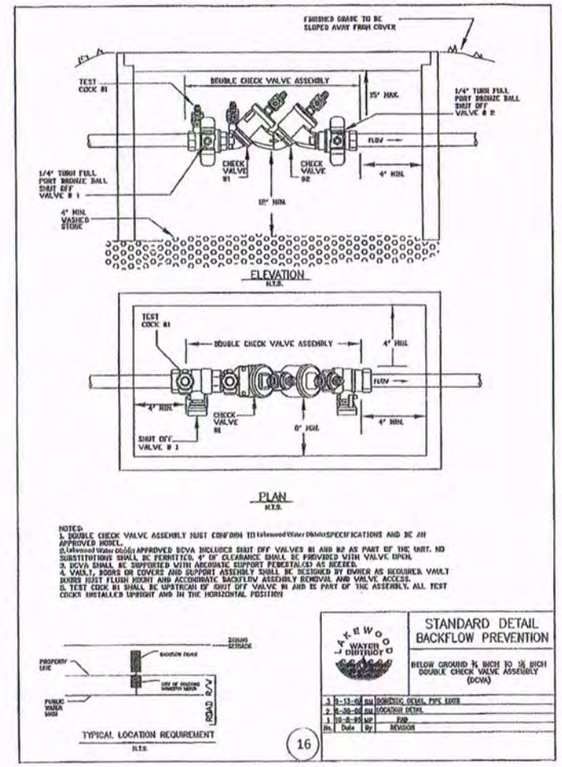

NOTES:
1. DOUBLE CHECK VALVE ASSEMBLY MUST CONFORM TO Lakewood Water District SPECIFICATIONS AND BE AN APPROVED MODEL.
2. Lakewood Water District APPROVED DCVA INCLUDES SHUT OFF VALVES #1 AND #2 AS PART OF THE UNIT. NO SUBSTITUTIONS SHALL BE PERMITTED. 4" OF CLEARANCE SHALL BE PROVIDED WITH VALVE OPEN.
3. DCVA SHALL BE SUPPORTED WITH APPROPRIATE SUPPORT PEDESTALS AS NEEDED.
4. VAULT, BOXES OR COVERS AND SUPPORT ASSEMBLY SHALL BE DESIGNED BY OWNER AS REQUIRED. VAULT BOXES JUST FLUSH JOINT AND ACCOMMODATE BACKFLOW ASSEMBLY REMOVAL AND VALVE ACCESS.
5. TEST COCK #1 SHALL BE UPSTREAM OF SHUT OFF VALVE #1 AND IS PART OF THE ASSEMBLY. ALL TEST COCKS INSTALLED UPRIGHT AND IN THE HORIZONTAL POSITION

16

LAKEWOOD WATER DISTRICT

STANDARD DETAIL
BACKFLOW PREVENTION

BELOW GROUND ¾ INCH TO 16 INCH DOUBLE CHECK VALVE ASSEMBLY (DCVA)

No.	Date	By	Revision
3	11-13-08	SM	DOMESTIC DETAIL, PIPE SIZES
2	6-30-05	SM	LOCATION DETAIL
1	10-8-05	MP	FOR

As-Built
7/2/21

NO	DATE	BY	CHD	APPR	REVISION

MARK R. STEPPY STATE OF WASHINGTON 24465 REGISTERED PROFESSIONAL ENGINEER 01-14-2020

kpff
512 Woodland Square Loop, SE, Suite 200
Lacey, WA 98503
360.292.7230
www.kpff.com

CALL UNDERGROUND LOCATE TWO (2) WORKING DAYS BEFORE YOU DIG 811

DRAWN BY BNT | DESIGNED BY REH
CHECKED BY MRS | APPROVED BY MRS
DATE 01-14-2020
JOB NO. 1018.000079

HARRY TODD PARK PHASE 2
CITY OF LAKEWOOD

WATER DETAILS

PERMIT DRAWING

W1.2

SHEET 3 OF 3

Provided to Builders Exchange of WA, Inc. For usage Conditions Agreement see www.bxwa.com - Always Verify Scale

ELECTRICAL SYMBOLS LEGEND

A/B	DETAIL/SECTION IDENTIFICATION: A = DETAIL/SECTION LETTER, B = SHEET NUMBER WHERE DETAIL/SECTION IS DRAWN.
A/B	EQUIPMENT CONNECTION CALLOUT. A,B EQUAL EQUIPMENT IDENTIFICATION ON MECHANICAL OR KITCHEN EQUIPMENT CONNECTION SCHEDULES. VERIFY EXACT EQUIPMENT REQUIREMENTS ON SHOP DRAWING EQUIPMENT SUBMITTALS PRIOR TO ROUGH-IN. DO NO ROUGH-IN FOR EQUIPMENT PRIOR TO REVIEW OF SUBMITTALS. REPORT ANY DIFFERENCES IN REQUIREMENTS TO ENGINEER IN WRITING.
	CONDUIT CONCEALED. HASH MARKS INDICATE NUMBER OF #12 CONDUCTORS IN CODE SIZE CONDUIT. NO HASH MARKS INDICATES 2-#12 CONDUCTORS PLUS GROUND IN 3/4" CONDUIT, LONG HASH MARKS INDICATES NEUTRAL CONDUCTOR. INDICATES GROUND CONDUCTOR.
	FLEXIBLE RACEWAY, PROVIDE GROUND CONDUCTORS PER NEC.
	A-1,3 ADJACENT TO ARROW INDICATES HOMERUN OF CONDUCTORS IN CONDUIT FOR CIRCUITS 1 AND 3 TO PANEL "A".
J	JUNCTION BOX.
	DUPLEX RECEPTACLE 20A, 125 VOLT. G = GROUND FAULT INTERRUPTING.
	GROUND PER NEC.
(E)	EXISTING
WP	WEATHERPROOF

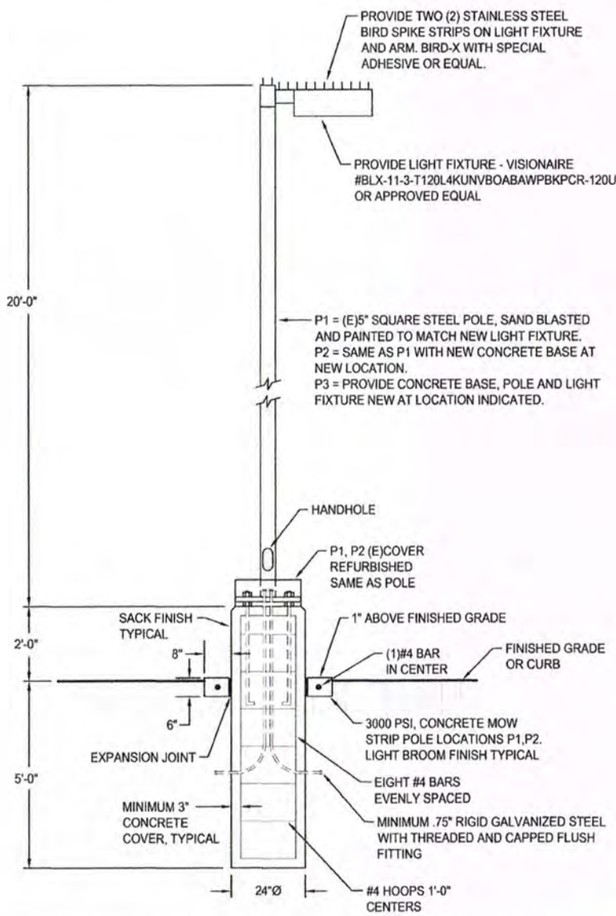

LIGHT POLE AND CONCRETE BASE - TYPICAL P1, P2 AND P3
NOT TO SCALE

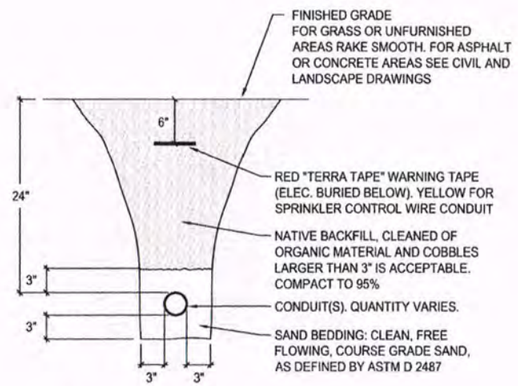

CONDUIT TRENCHING
NOT TO SCALE

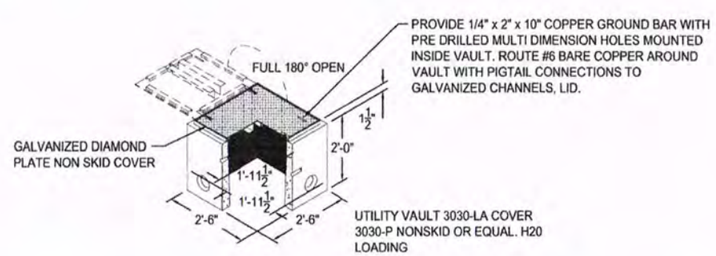

POWER HANDHOLE - TYPICAL HH1, HH2 AND HH3
NO SCALE

As-Built
7/2/21

BID SET

CROSS ENGINEERS, INC
923 MLK Jr. Way
Tacoma, WA 98405
info@crossengineers.com
Phone: (253) 759-0118
Job Number: 18-104

811 Call 811 two business days before you dig

Harry Todd Park Waterfront Renovation

Lakewood Parks & Recreation Department
Lakewood, WA

Robert W. Droll
Landscape Architect, PS
4405 7th Avenue SE, Ste. 203
Lacey, WA 98503
(360) 456-3813
FAX (360) 493-2063
E-MAIL bob@rwdroll.com
Landscape Architecture
Site Planning
Environmental Design
Urban Design
Land Planning
Project Management

STEVEN L. HUBBS
STATE OF WASHINGTON
20220083
REGISTERED PROFESSIONAL ENGINEER
3/18/20

PROJECT NO. 18021
DRAWING
DESIGNED BY GLW
DRAWN BY JAE
CHECKED BY SLH

REVISION

DATE	CHANGE

DATE: MARCH 24, 2020

ELECTRICAL LEGEND/ FIXTURE SCHEDULE

E0.0

Sheet ___ of ___

Provided to Builder Purchaser of WA, Inc. For usage Conditions Agreement see www.hwa.com - Always Verify Scale

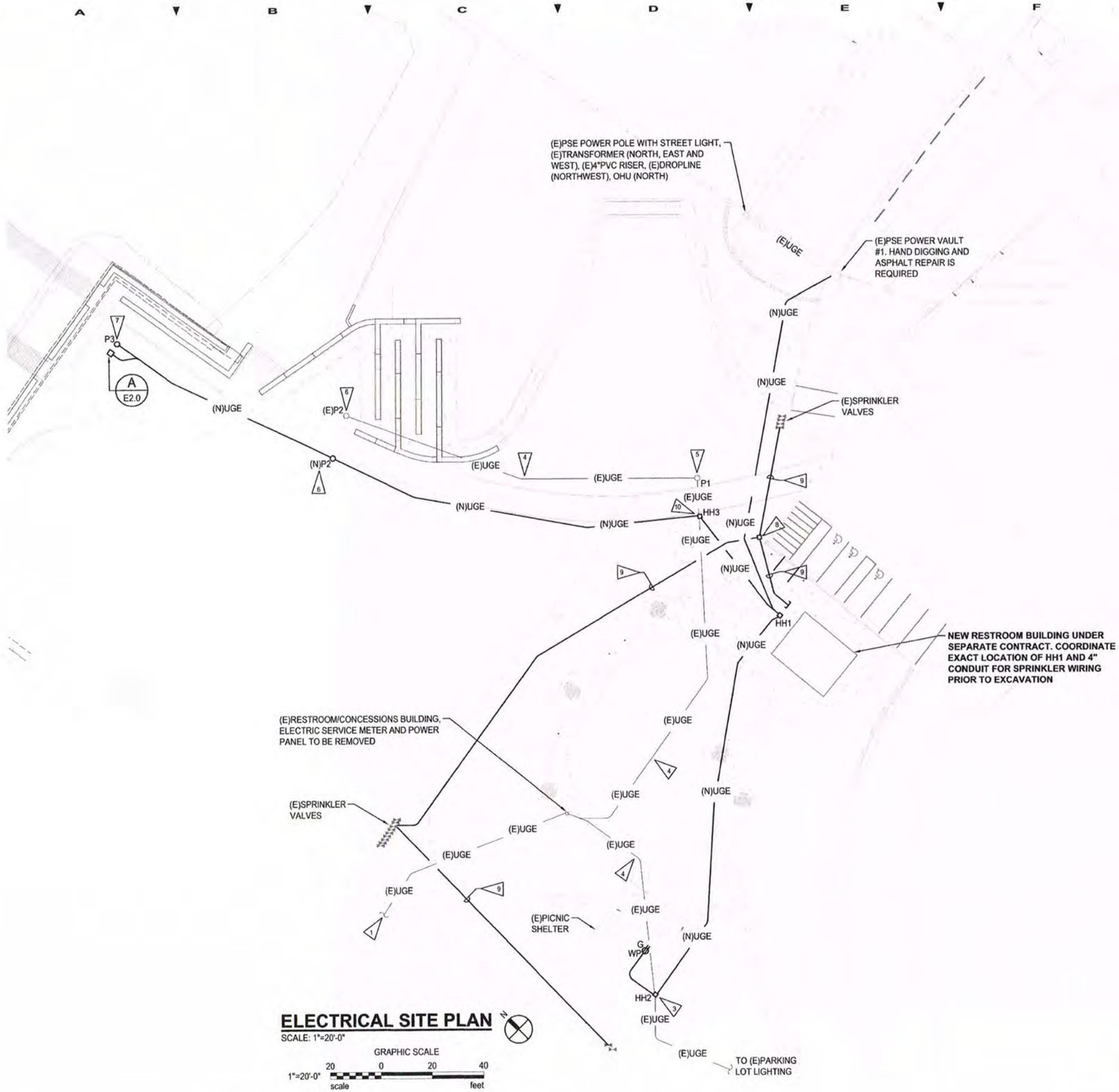

ELECTRICAL NOTES:

1. EXISTING PSE SERVICE POLE CONTINUES APPROXIMATELY 150'-0" PAST FENCE LINE. CONTRACTOR SHALL REMOVE POLE RISER CONDUIT (CAP AND ABANDON 6'-0" AFG) AND SERVICE WIRE TO DEMOLISHED RESTROOM/CONCESSIONS BUILDING. COORDINATE WORK WITH PSE AND HAVE METER RECLAIMED. ABANDON EXISTING UNDERGROUND CONDUIT 5'-0" PAST RESTROOM/CONCESSIONS BUILDING DEMOLITION FOOTPRINT.
2. EXISTING UNDERGROUND WIRING TO BE REMOVED FROM EXISTING RESTROOM/CONCESSIONS BUILDING AND TO NEW HH1 AND HH2. ABANDON EXISTING UNDERGROUND CONDUIT 5'-0" PAST RESTROOM/CONCESSIONS BUILDING DEMOLITION FOOTPRINT.
3. CONTRACTOR SHALL LOCATE AND INTERCEPT EXISTING UNDERGROUND ELECTRICAL CONDUIT/WIRE TO PARKING LOT LIGHTING. INSTALL NEW HANDHOLE AND MAKE WATERTIGHT SPLICES IN VAULT. SAW CUT EXISTING PICNIC SHELTER CONCRETE SLAB, REMOVE AND PATCH CONCRETE. INSTALL NEW 20A, 125V, GFI, RECEPTACLE IN CAST BOX AT PICNIC SHELTER ON EXISTING POST AT 18" AFF.
4. CONTRACTOR SHALL LOCATE AND INTERCEPT EXISTING UNDERGROUND ELECTRICAL CONDUIT/WIRE , REMOVE EXISTING WIRING AND REMOVE CONDUIT FOR NEW RAMP WORK. OTHER ARES CONDUIT MAY BE ABANDONED.
5. EXISTING 5" SQUARE STEEL LIGHT POLE WITH BASE COVER AND LIGHT FIXTURE. CONTRACTOR SHALL REMOVE EXISTING POLE AND BASE COVER. SAND BLAST AND POWDER COAT PAINT POLE TO MATCH NEW LIGHT FIXTURE. MOUNT NEW LIGHT FIXTURE TO EXISTING POLE. PROVIDE NEW MOUNTING PLATE WELDED TO POLE IF REQUIRED. PROVIDE NEW BASE NUTS, WASHERS AND CLEAN EXPOSED CONCRETE BASE AND SACK FINISH.
6. REMOVE EXISTING LIGHT FIXTURE, CONCRETE BASE AND LEGALLY DISPOSE OF. REMOVE EXISTING 5" SQUARE STEEL POLE WITH BASE COVER, SAND BLAST AND POWDER COAT PAINT POLE TO MATCH NEW LIGHT FIXTURE. PROVIDE NEW CONCRETE POLE BASE, NEW LIGHT FIXTURE AND INSTALL ALL ON OPPOSITE SIDE OF WALKWAY.
7. PROVIDE NEW CONCRETE LIGHT POLE BASE, POLE AND LIGHT FIXTURE.
8. PROVIDE J-11A FOGTITE (OR EQUAL) HANDHOLE FOR SPRINKLER SYSTEM CONTROL WIRING.
9. PROVIDE 4"C.O. WITH PULLSTRING FOR IRRIGATION CONTROL WIRING. COORDINATE ROUTING AND TERMINATION LOCATIONS WITH SPRINKLER CONTRACTOR PRIOR TO STARTING WORK.
10. INTERCEPT EXISTING CONDUIT TO EXISTING POLE BASE P1. RETAIN CONDUIT UNDER EXISTING WALK PATH AND PROVIDE NEW WIRE TO P1.

As-Built
7/2/21

IF SHEET IS LESS THAN 22" x 34" IT IS A REDUCED SET

BID SET

CROSS ENGINEERS, INC
923 MLK Jr. Way
Tacoma, WA 98405
info@crossengineers.com
Phone: (253) 759-0118
Job Number: 18-104

Call 811 two business days before you dig

Harry Todd Park Waterfront Renovation

Lakewood Parks & Recreation Department
Lakewood, WA

Robert W. Droll
Landscape Architects, PS
4405 7th Avenue SE, Ste. 203
Lacey, WA 98503
(360) 456-3813
FAX (360) 493-2063
E-MAIL bob@wdroll.com
Landscape Architecture
Site Planning
Environmental Design
Urban Design
Land Planning
Project Management

STEVEN L. HUBBS
STATE OF WASHINGTON
DECEMBER
REGISTERED
PROFESSIONAL ENGINEER
3/18/20

PROJECT NO. 18021
DRAWING
DESIGNED BY GLW
DRAWN BY JAE
CHECKED BY SLH

REVISION

DATE	CHANGE

DATE: MARCH 24, 2020

ELECTRICAL SITE PLAN

E1.0

Sheet ___ of ___

Provided to Builders Exchange of WA, Inc. For usage Conditions Agreement see www.bxwa.com - Always Verify Scale

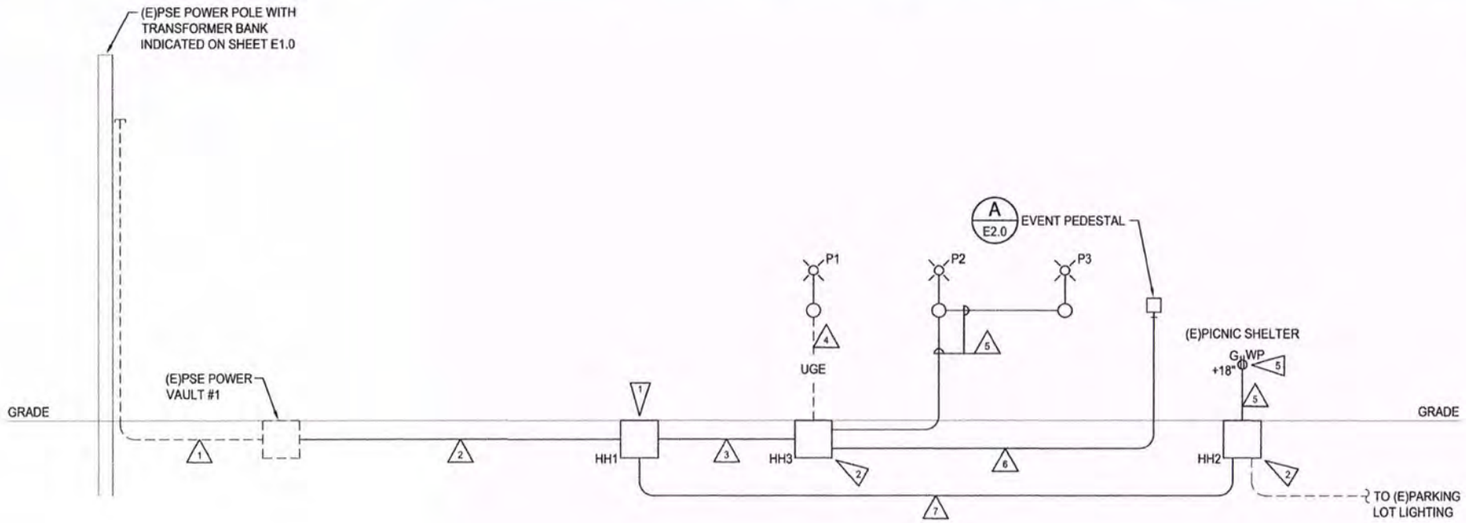

POWER RISER DIAGRAM

NO SCALE

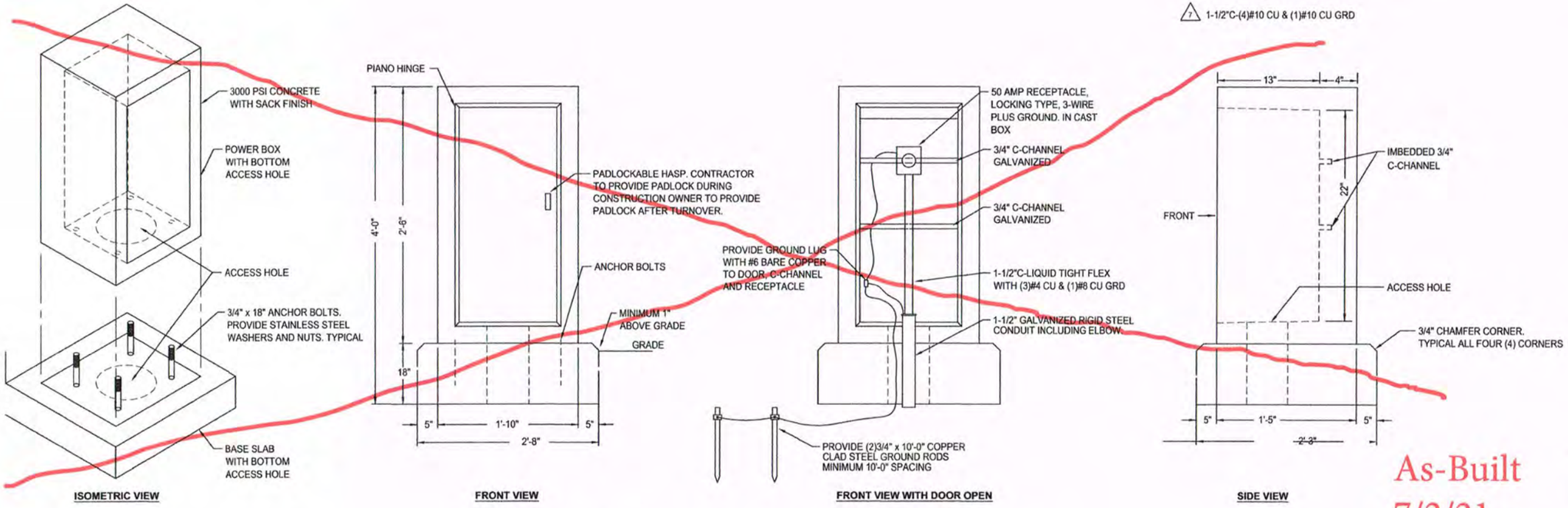

A/E2.0 CUSTOM CAST CONCRETE POWER BOX

NOT TO SCALE

See Following Nema Enclosure Drawing

ELECTRICAL NOTES:

1. RESTROOM BUILDING PROVIDED UNDER SEPARATE CONTRACT. LEAVE MINIMUM 50'-0" OF COILED CONDUCTORS IN HANDHOLE FOR EXTENSION AND TERMINATION TO METER AND PANEL BY RESTROOM CONTRACTOR.
2. PROVIDE WATERTIGHT SPLICE TO EXISTING SITE LIGHTING CONDUCTORS IN HANDHOLE.
3. CONTRACTOR SHALL SAWCUT, REMOVE AND PATCH EXISTING CONCRETE. PROVIDE NEW GFI, 120V, 20A, DUPLEX RECEPTACLE IN CAST BOX ON EXISTING COLUMN WITH NEMA 3R, "IN USE" COVER.
4. PROVIDE CUSTOM CONCRETE ENCLOSURE WITH 316 STAINLESS STEEL, PIANO HINGED DOOR AND PADLOCKABLE HASP OLDCASTLE OR EQUAL. CONTRACTOR AS PART OF THE SHOP DRAWING SUBMITTAL SHALL PROVIDE EXTERIOR AND INTERIOR ELEVATIONS, PLAN DRAWINGS WITH ACTUAL RECEPTACLES, SPLICE BOX AND CONDUIT LAYOUT DIMENSIONED FOR ENGINEERS REVIEW PRIOR TO FABRICATION. MINIMUM DRAWING SCALE SHALL BE 1/2" = 1'-0". HAND SKETCHES ARE NOT ACCEPTABLE.
5. OLD CASTLE OR EQUAL CONDUIT ELBOW AND ABOVE GRADE SHALL BE GALVANIZED RIGID STEEL WITH CAST BOX AND METAL NEMA 3R "IN USE" LOCKABLE COVER.

CONDUIT AND CONDUCTOR SCHEDULE:

1. CONTRACTOR TO COORDINATE WITH PSE AND PROVIDE NEW (3)#300 KCM AL IN EXISTING FROM (E)POWER POLE TO (E)VAULT.
2. 3"C-(3)#300 KCM AL
3. (1)1"C-(2)#10 CU & (1)#10 CU GRD
   (1)1-1/2"C-(3)#4 CU & (1)#8 CU GRD
4. (E)3/4"C-(N)(2)#10 CU & (1)#10 CU GRD
5. 3/4"C-(2)#10 CU & (1)#10 CU GRD
6. 1-1/2"C-(3)#4 CU & (1)#8 CU GRD
7. 1-1/2"C-(4)#10 CU & (1)#10 CU GRD

As-Built
7/2/21

IF SHEET IS LESS THAN 22" x 34" IT IS A REDUCED SET

CROSS ENGINEERS, INC
923 MLK Jr. Way
Tacoma, WA 98405
info@crossengineers.com
Phone: (253) 759-0118
Job Number: 18-104

Call 811 two business days before you dig

BID SET

Harry Todd Park Waterfront Renovation

Lakewood Parks & Recreation Department
Lakewood, WA

Robert W. Droll
Landscape Architect, PS
4405 7th Avenue SE, Ste 203
Lacey, WA 98503
(360) 456-3813
FAX (360) 493-2063
E-MAIL bob@rwdroll.com
Landscape Architecture
Site Planning
Environmental Design
Urban Design
Land Planning
Project Management

STEVEN L. HUBBS, STATE OF WASHINGTON, 00030080, REGISTERED PROFESSIONAL ENGINEER
3/18/20

PROJECT NO. 18021
DRAWING
DESIGNED BY GLW
DRAWN BY JAE
CHECKED BY SLH

REVISION

DATE	CHANGE

DATE: MARCH 24, 2020

POWER RISER DIAGRAM

E2.0

Sheet ___ of ___

REVISIONS				
ZONE	REV.	DESCRIPTION	DATE	APPROVED
--	--	ISSUED FOR APPROVAL	3/3/2021	JAM

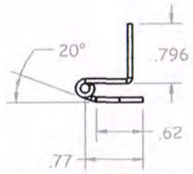

3.00"x 1/8" Pin SS
HINGE QUANTITY: 1

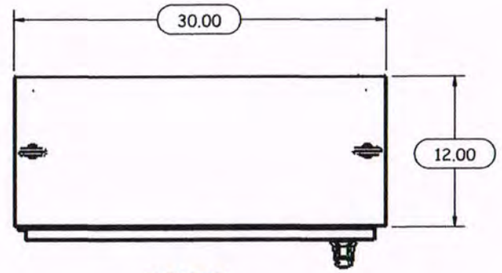

TOP VIEW

NOTES:

1. NEMA 4X RATED // UL LISTED // IP66, FREE STANDING STYLE ENCLOSURE.
2. 14ga. 316L STAINLESS STEEL CONSTRUCTION, BRUSH FINISHED.
3. 12ga. 316L STAINLESS STEEL BACKPANEL, BRUSH FINISHED.
4. 3-POINT LATCH DEFEATER HANDLE // CONTINUOUS HINGE.
5. (2X) REMOVABLE EYEBOLTS // PRINT POCKET LOOSE.

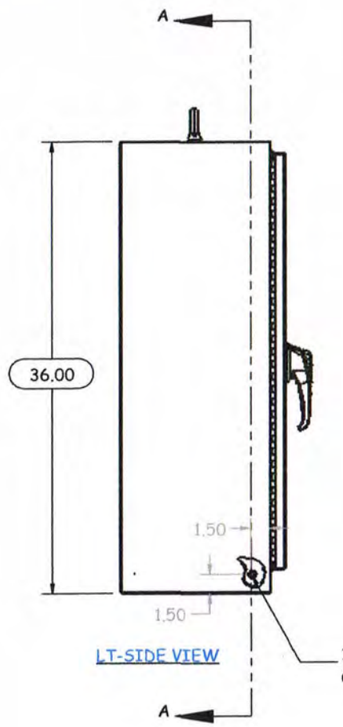

LT-SIDE VIEW

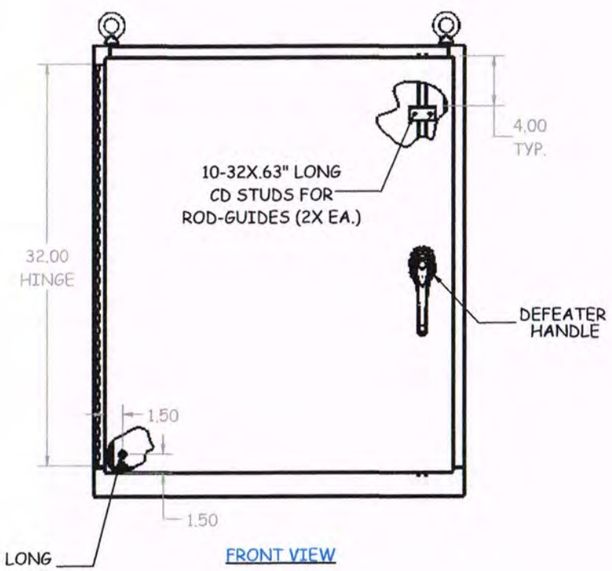

FRONT VIEW

SECTION A-A

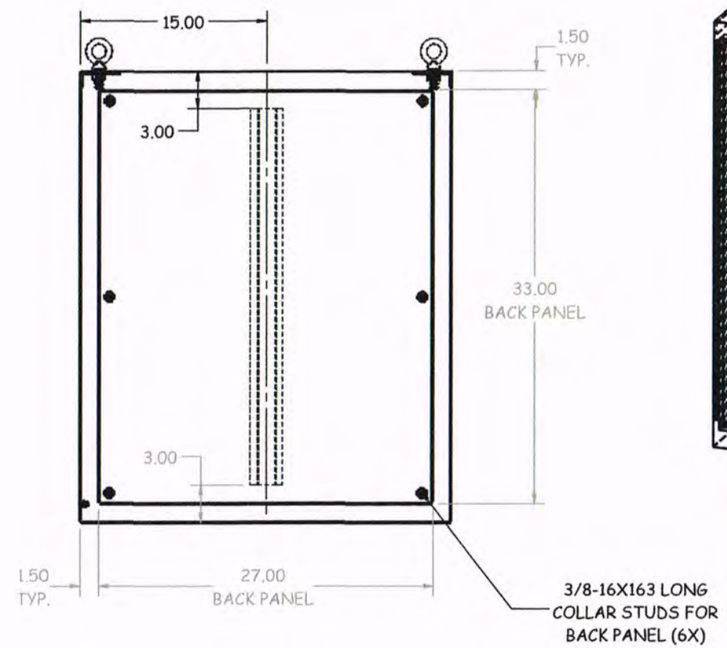

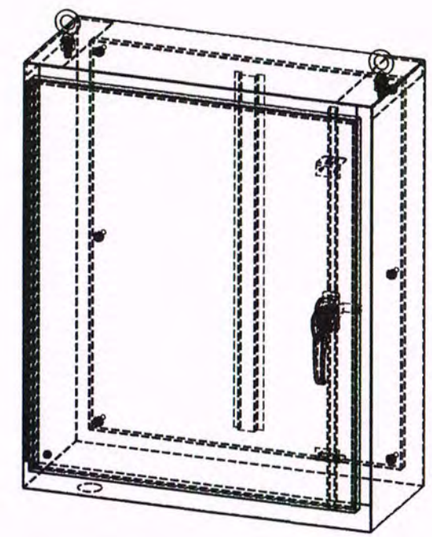

ISOMETRIC VIEW

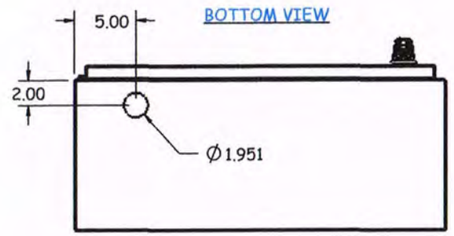

BOTTOM VIEW

PROPRIETARY AND CONFIDENTIAL
THE INFORMATION CONTAINED IN THIS DRAWING IS THE SOLE PROPERTY OF NEMA ENCLOSURES. ANY REPRODUCTION IN PART OR AS A WHOLE WITHOUT THE WRITTEN PERMISSION OF NEMA ENCLOSURES IS PROHIBITED.

UNLESS OTHERWISE SPECIFIED:

DIMENSIONS ARE IN INCHES
TOLERANCES:
FRACTIONAL ±1/8
ANGULAR: MACH ±1°
HOLE +.004/-.004 (LASER ONLY)
ONE PLACE DECIMAL ± 1/8
TWO PLACE DECIMAL ± 1/16
THREE PLACE DECIMAL ± 1/32
POWDER COAT STANDARD 2 MIL ±.5 MIL

	NAME	DATE
DRAWN	JAM	3/3/21
CHECKED		
ENG APPR.		
MFG APPR.		
Q.A.		
MATERIAL	AS NOTED	
FINISH	AS NOTED	

DO NOT SCALE DRAWING

TITLE:

QUIGG BROS, INC
36.00"H X 30.00"W X 12.00"D
NEMA 4X/IP66/U.L. LISTED
FABRICATION

DWG. NO. FS4XS603603012

NEMA REV

SCALE: 1:12 WEIGHT:

SHEET 1 OF 2

GENERAL NOTES

1. THESE NOTES CONTAIN GENERAL INFORMATION FOR THE INWATER STRUCTURES AND ARE NOT COMPREHENSIVE. CONTRACTOR SHALL VERIFY INFORMATION GIVEN HERE WITH TECHNICAL SPECIFICATIONS AND OTHER DOCUMENTS AND BRING ANY CONFLICTS TO THE ATTENTION OF CITY OF LAKEWOOD (OWNER) BEFORE WORK IS INITIATED. THE OWNER WILL RESOLVE ANY SUCH CONFLICT.
2. CONTRACTOR SHALL ESTABLISH SURVEY BENCHMARKS ON SITE PRIOR TO COMMENCING WORK. CONTRACTOR SHALL VERIFY THE COORDINATES OF THE NEW STRUCTURES AND SHALL SUBMIT THE INFORMATION FOR REVIEW AT LEAST 15 BUSINESS DAYS PRIOR TO COMMENCING WORK.
3. ALL DIMENSIONS AND DETAILS SHALL BE VERIFIED BY FIELD MEASUREMENT BY THE CONTRACTOR PRIOR TO FABRICATION AND CONSTRUCTION.
4. THE CONTRACTOR SHALL ABIDE BY ALL APPLICABLE LOCAL ENVIRONMENTAL PROTECTION STANDARDS, PERMITTING LAWS, AND REGULATIONS.
5. ALL APPLICABLE SAFETY REGULATIONS SHALL BE STRICTLY FOLLOWED. METHODS OF DEMOLITION, CONSTRUCTION, AND ERECTION OF STRUCTURAL MATERIAL IS THE CONTRACTOR'S RESPONSIBILITY.
6. ALL LOCATIONS OF EXISTING FEATURES ARE APPROXIMATE AND HAVE BEEN ESTABLISHED FROM AVAILABLE RECORDS AND LIMITED FIELD INVESTIGATIONS. EXISTING FEATURES SHALL BE FIELD VERIFIED BY THE CONTRACTOR PRIOR TO STARTING CONSTRUCTION ACTIVITIES AND DEMOLITION.
7. ALL EXISTING FEATURES LOCATED IN THE PROJECT AREA SHALL BE PROTECTED UNLESS SPECIFICALLY CALLED OUT TO BE DEMOLISHED OR REMOVED.
8. PRIOR TO ANY DEMOLITION AND EARTHWORK ACTIVITIES, THE CONTRACTOR SHALL VERIFY ALL EXISTING CONDITIONS, AND PROVIDE AND INSTALL ADEQUATE BMP'S TO CAPTURE ANY CONSTRUCTION DEBRIS IN ACCORDANCE WITH THE DRAWINGS, TECHNICAL SPECIFICATIONS, AND PERMIT REQUIREMENTS.
9. CONTRACTOR IS RESPONSIBLE TO REVIEW SITE CONDITIONS INCLUDING EXISTING GROUND CONDITIONS AND GRADE TO DEVELOP APPROPRIATE WORK PLAN, MOBILIZING AND CONDUCTING WORK.

CODES AND STANDARDS

1. ALL METHODS AND MATERIALS SHALL CONFORM TO ASCE-07, AS AMENDED AND ADOPTED BY THE LOCAL AUTHORITIES.
2. REINFORCED CONCRETE WORK SHALL CONFORM TO THE REQUIREMENTS OF "SPECIFICATIONS FOR STRUCTURAL CONCRETE FOR BUILDINGS" (ACI 301) AND "BUILDING CODE REQUIREMENTS FOR REINFORCED CONCRETE" (ACI 318), LATEST EDITION.
3. ALL STRUCTURAL DESIGN AND CONSTRUCTION SHALL COMPLY WITH ANSI/AISC 341-LATEST EDITION REQUIREMENTS.
4. REFERENCE TO ASTM AND OTHER STANDARDS SHALL MEAN THE LATEST EDITION IN EFFECT ON THE BID DATE, UNLESS NOTED OTHERWISE IN THESE DOCUMENTS OR DESIGNATED BY THE GOVERNING CODE.
5. ALL ALUMINUM DESIGN SHALL COMPLY WITH THE ALUMINUM DESIGN MANUAL 15.
6. ALL STEEL DESIGN SHALL CONFORM TO THE SPECIFICATION FOR STRUCTURAL STEEL BUILDINGS (AISC 360-16)

WATER LEVELS

1. WATER LEVELS SHOWN ARE FOR REFERENCE ONLY AND DO NOT INDICATE CONDITIONS DURING CONSTRUCTION.

SURVEY INFORMATION

1. CONTRACTOR SHALL MEET THE REQUIREMENTS OF THE CONTRACT DRAWINGS AND THE TECHNICAL SPECIFICATIONS FOR LAYING OUT AND VERIFY THE LOCATIONS OF THE STRUCTURES INCLUDING COORDINATION WITH THE LAYOUT OF THE BLOCK WALL. ANY ADDITIONAL SURVEYING REQUESTED BY THE ENGINEER TO VERIFY THE STRUCTURES ARE INSTALLED PROPERLY SHALL BE CONDUCTED BY THE CONTRACTOR PROVIDED SURVEYOR AT NO ADDITIONAL EXPENSE TO THE OWNER.

MATERIALS AND CONSTRUCTION

1. CONTRACTOR IS RESPONSIBLE FOR ADEQUATE SHORING, BRACING, AND CUTTING OF ALL COMPONENTS AS REQUIRED FOR SAFETY AND STRUCTURAL INTEGRITY THROUGHOUT CONSTRUCTION IN ACCORDANCE WITH SOUND PRACTICE AND AS PER THE TECHNICAL SPECIFICATIONS.
2. ALL SHOP DRAWINGS FOR CONCRETE ELEMENTS, REINFORCING STEEL, STEEL PILES, STEEL FRAMES, AND MISCELLANEOUS METALS SHALL BE SUBMITTED TO AND REVIEWED BY THE OWNER PRIOR TO FABRICATION.

STEEL PILES

1. CONTRACTOR SHALL BECOME FAMILIAR WITH PROJECT SITE CONDITIONS AND PILE DRIVING CONDITIONS.
2. STEEL PILING SHALL CONFORM TO ASTM A252, GRADE III WITH A MINIMUM YIELD STRENGTH OF 50 KSI.
3. ALL PILES SHALL BE HOT-DIPPED GALVANIZED IN ACCORDANCE WITH ASTM A123.
4. SUPPLIED PILE CUTOFF TO BE DETERMINED BY THE CONTRACTOR (MIN 3 FT).

CONCRETE

1. REINFORCING STEEL
   - A. ALL REINFORCING STEEL, EXCEPT AS NOTED OTHERWISE, SHALL BE UNCOATED DEFORMED STEEL BARS CONFORMING TO ASTM A 615, GRADE 60.
   - B. MINIMUM CONCRETE COVER FOR REINFORCING SHALL BE AS FOLLOWS, UNLESS NOTED OTHERWISE:

USE	COVER
PRECAST CONCRETE	1 1/4"
CAST-IN-PLACE CONCRETE	3"

   - C. LAP REINFORCING BARS IN ACCORDANCE WITH ACI 318.
   - D. REINFORCING STEEL SHALL BE DETAILED IN ACCORDANCE WITH "ACI MANUAL OF STANDARD PRACTICE FOR DETAILING REINFORCED CONCRETE STRUCTURES", ACI 315.
   - E. SHOP DRAWINGS FOR ALL REINFORCED CONCRETE SHALL BE DEVELOPED BY THE CONTRACTOR AND SUBMITTED TO THE OWNER FOR REVIEW PRIOR TO START OF CONSTRUCTION.
2. MINIMUM MIX DESIGN COMPRESSIVE STRENGTH AT 28 DAYS
   - A. CAST-IN-PLACE CONCRETE 4,000 PSI
3. ALL EXPOSED CORNERS OF CAST-IN-PLACE CONCRETE SHALL HAVE A 1/2" RADIUS.
4. WHERE NECESSARY, CONTRACTOR SHALL PROVIDE AND INSTALL ADDITIONAL REINFORCING (STEEL STIFFENERS, BRACING, LIFTING INSERTS, ETC.) TO RESIST ERECTION AND TRANSPORTATION STRESSES. LIFTING INSERTS SHALL BE INSTALLED AT LOCATIONS WHERE THEY WILL BE HIDDEN BY CONSTRUCTION OR OTHERWISE COVERED.

MISCELLANEOUS METALS

1. ALL STEEL SHALL BE HOT-DIPPED GALVANIZED UNLESS OTHERWISE NOTED.
2. ALL MISCELLANEOUS STEEL SHALL BE THE FOLLOWING UNLESS OTHERWISE NOTED.

STEEL W SHAPES:	ASTM A992 GR. 50
STEEL HP SHAPES:	ASTM A572 GR. 50
STEEL RECTANGULAR, ROUND, AND SQUARE HSS:	ASTM A500 GR. B (46 KSI)
STEEL PLATE, FLATBAR, CHANNELS, ANGLES:	ASTM A36
STEEL PIPE:	ASTM A53 GRADE B, TYPE S
STEEL BOLTS:	ASTM A325
STAINLESS STEEL PLATE:	ASTM A240, TYPE 316
STAINLESS STEEL SHAPES, BARS, AND RODS:	ASTM A276, TYPE 316

3. ALL STRUCTURAL ALUMINUM SHAPES, INCLUDING TUBES, PLATES, ANGLES AND PIPE SHALL CONFORM TO GRADE 6061-T6 ALUMINUM, UNLESS OTHERWISE SPECIFIED. UHMW POLYETHYLENE ISOLATORS SHALL BE USED WHEN CONNECTING DISSIMILAR MATERIALS.
4. WELDING OF STRUCTURAL AND MISCELLANEOUS STEEL SHALL CONFORM TO THE LATEST EDITION OF THE AWS D1.1. ELECTRODE SHALL HAVE A YIELD STRENGTH OF 70 KSI.
5. ALL WELDERS SHALL BE CERTIFIED BY WASHINGTON ASSOCIATION OF BUILDING OFFICIALS (WABO) OR AWS AND BE ABLE TO PRODUCE THE REQUIRED CONTINUITY RECORDS.
6. WELDING OF ALUMINUM SHALL CONFORM TO THE LATEST EDITION OF AWS D1.2.

PILING CAPS

1. ALL PILING CAPS SHALL BE WHITE FIBERGLASS AS MANUFACTURED BY CHEYENNE MANUFACTURING, INC. (1-855-337-1227) OR APPROVED EQUAL.

FLOAT

1. FLOATS SHALL BE A COMBINATION OF GALVANIZED STEEL FRAMING AND FLOTATION TUBS IN ACCORDANCE WITH THE TECHNICAL SPECIFICATION 02 94 00 - FLOAT SYSTEMS.

ALUMINUM STRUCTURES

1. CONTRACTOR SHALL BE RESPONSIBLE FOR FINAL DESIGN OF ALUMINUM STRUCTURES, INCLUDING GANGWAYS, WALKWAYS, AND TRANSFER RAMP IN ACCORDANCE WITH THESE DRAWINGS AND TECHNICAL SPECIFICATIONS.
2. ALUMINUM STRUCTURES SHALL BE GRATED WITH MOLDED ECOGRATE 62 FIBERGLASS GRATING WITH BAREFOOT FRIENDLY AQUA GRIT TRACTION SURFACING AS MANUFACTURED BY FIBERGRATE COMPOSITE STRUCTURES INC. OR APPROVED EQUAL.

DESIGN LOADS

1. DEAD LOADS:
   SELF WEIGHT OF STRUCTURES, INCLUDING APPURTENANCES AND ATTACHMENTS
2. LIVE LOADS:
   - UNIFORM LOAD - GANGWAYS AND PIER: 100 PSF OVER DECK SURFACE AREA
   - UNIFORM LOAD - FLOATS: 20 PSF OVER DECK SURFACE
   - POINT LOAD: 400 LB ACTING ON A 1 SQ FT AREA AT ANY POINT ON DECK SURFACE
3. SNOW LOADS: 25 PSF OVER DECK SURFACE AREA
4. WIND IN ACCORDANCE WITH PROJECT TECHNICAL SPECIFICATIONS:
   DESIGN WIND SPEED: V = 115 MPH
   WIND IMPORTANCE FACTOR: I = 1.0 (OCCUPANCY CATEGORY II)
   EXPOSURE CATEGORY: = D
5. WAVE LOADS:
   - MAX 200 LB/FT
   - SIGNIFICANT WAVE HEIGHT: 2.5 FT
   - PEAK PERIOD: 3 SECONDS
6. DESIGN VESSEL
   THE DESIGN VESSEL FOR THE FLOATING DOCK SYSTEMS ARE LOW FREEBOARD CREW BOATS. FLOATS ARE NOT DESIGNED FOR RECREATIONAL POWER VESSELS.
7. CONTRACTOR SHALL REFER TO THE TECHNICAL SPECIFICATIONS FOR ADDITIONAL DESIGN REQUIREMENTS NOT LISTED.

PILE DRIVING

1. THE CONTRACTOR SHALL REVIEW THE PROJECT GEOTECHNICAL REPORT PRODUCED BY LANDAU ASSOCIATES FOR SITE SUBSURFACE PILE DRIVING CONDTIONS.
2. THE CONTRACTOR SHALL USE A TEMPLATE OR DRIVING FRAME TO MAINTAIN PROPER ALIGNMENT OF PILE DURING DRIVING. PILES SHALL BE DRIVEN TO ACHIEVE THE MINIMUM TIP ELEVATIONS SHOWN ON THE DRAWINGS. CONTRACTOR IS RESPONSIBLE FOR SELECTION OF APPROPRIATE PILE HAMMER TYPE AND SIZE, AS REQUIRED TO ACHIEVE THE PILE TIP DEPTHS AND REQUIRED LOAD CAPACITIES WITHOUT DAMAGING THE PILING, IN COMPLIANCE WITH THE RELEVANT PERMIT AND PROJECT DOCUMENTS. IF PILE REACHES REFUSAL PRIOR TO ACHIEVING THE SHOWN TIP ELEVATION, THE CONTRACTOR SHALL IMMEDIATELY SUBMIT PILE DRIVING LOGS TO THE OWNER FOR APPROVAL. DRIVING HAMMERS SHALL BE MAINTAINED IN PROPER ALIGNMENT DURING DRIVING OPERATIONS BY USE OF LEADS OR GUIDES ATTACHED TO THE HAMMER. PILES DAMAGED DURING DRIVING SHALL BE REMOVED AND REPLACED AT THE CONTRACTOR'S EXPENSE.
3. THE CONTRACTOR SHALL NOT DEMOBILIZE PILE DRIVING EQUIPMENT PRIOR TO OWNER AND ENGINEER ACCEPTANCE OF AS-BUILT PILE LOCATIONS AND PLUMBNESS.

ABBREVIATIONS

ALUM	ALUMINUM	OC	ON CENTER
℄	CENTERLINE	REF	FOR REFERENCE ONLY
CIP	CAST-IN-PLACE	REV	REVISION
CLR	CLEAR	SF	SQUARE FEET
CONC	CONCRETE	SIM	SIMILAR
ø/DIA	DIAMETER	SS	STAINLESS STEEL
E	EAST/EASTING	TYP	TYPICAL
EA	EACH	UHMW	ULTRA HIGH MOLECULAR WEIGHT
EL	ELEVATION	UV	ULTRAVIOLET
FT	FEET	W/	WITH
GALV	GALVANIZED	WT	WIDE FLANGE TEE
HDPE	HIGH DENSITY POLYETHYLENE	@	AT
HSS	HOLLOW STRUCTURAL SECTION	'	MIN OR FEET
MAX	MAXIMUM	"	SECONDS OR INCHES
MIN	MINIMUM	°	DEGREES
N	NORTH/NORTHING		

As-Built
7/2/21

MOTT MACDONALD
1601 5th Avenue
Suite 800
Seattle, Washington 98101
T +1 (425) 778 6243
F +1 (425) 778 6883
W mottmac.com

Client
City of Lakewood Parks & Recreation
Doug Fraser, Capital Project Coordinator
6000 Main Street SW
Lakewood, WA 98499
Phone (253) 983-7852

Rev	Date	Drawn	Description	Ch'k'd	App'd
1	3/23/20	CNT	Final Design Submittal	EDE	

3/23/20

Designed	E. Edgecomb	Eng check	E. Sheesley
Drawn	C. Taylor	Coordination	
Dwg check	E. Sheesley	Approved	S. Phillips
Scale at ANSI D: As Noted	Status	Rev	Security

Project Number: 398289 | B/O: 1 | Total: 15 | Drawing Number:

Title: Harry Todd Park Waterfront Renovation

Structural Notes

C:\pwworking\mm\ports_harbors\mor63630\dms38318\398289 Design site sections.dwg Mar 23, 2020 - 2:12PM MOR69630

... Builders Exchange of WA, Inc. For usage Conditions Agreement see www.bxwa.com - Always Verify Scale

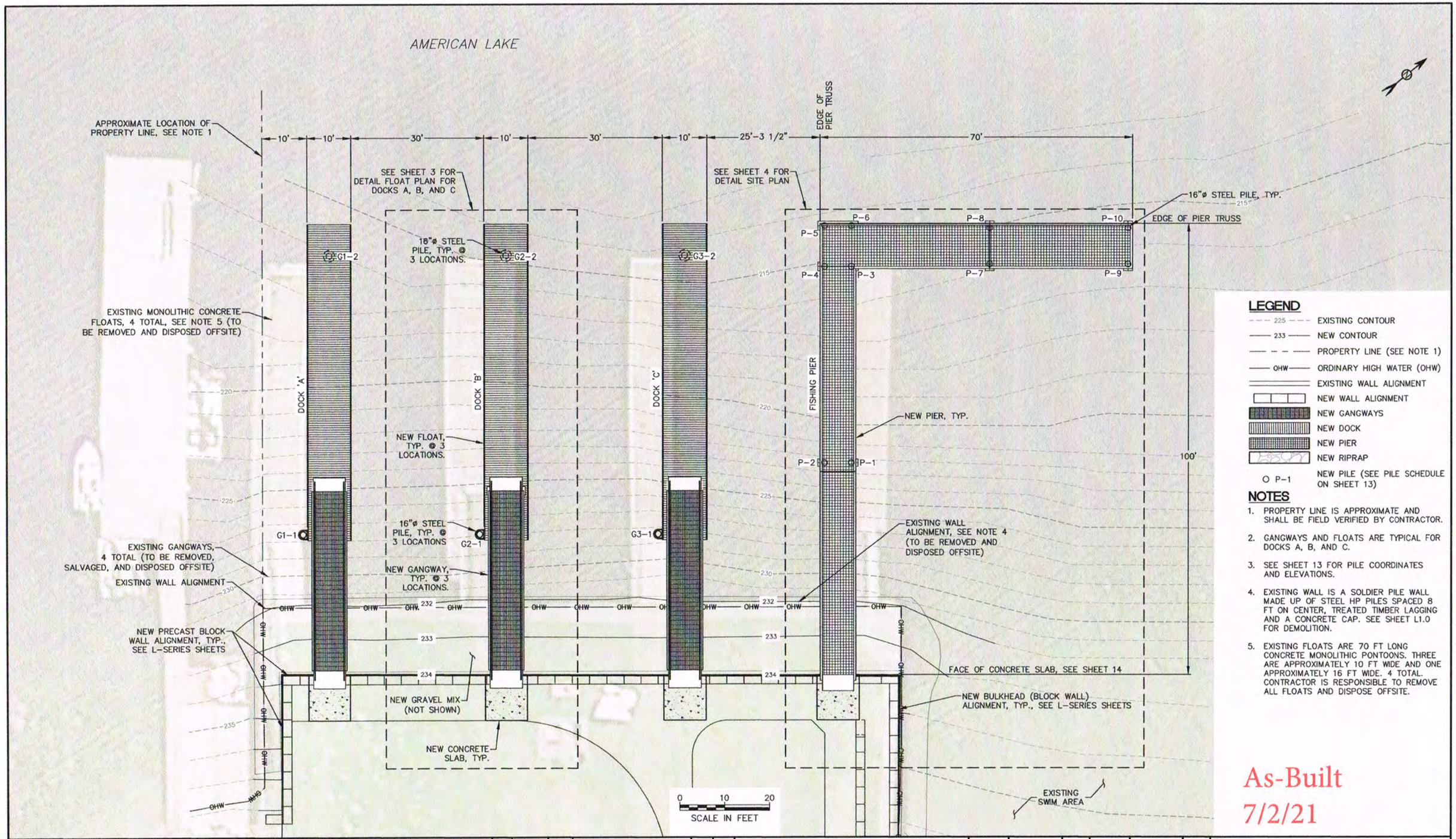

MOTT MACDONALD
1601 5th Avenue
Suite 800
Seattle, Washington 98101
T +1 (425) 778 6243
F +1 (425) 778 6883
W mottmac.com

Client

City of Lakewood Parks & Recreation
Doug Fraser, Capital Project Coordinator
6000 Main Street SW
Lakewood, WA 98499
Phone: (253) 983-7852

Rev	Date	Drawn	Description	Ch'k'd	App'd
1	3/23/20	CNT	Final Design Submittal	EDE	

3/23/20

Designed	E. Edgecomb		Eng check	E. Sheesley	
Drawn	C. Taylor		Coordination		
Dwg check	E. Sheesley		Approved	S. Phillips	
Scale at ANSI D: As Noted	Status		Rev		Security

Project Number	B/O	Total
398289	2	15

Drawing Number

Title
Harry Todd Park
Waterfront Renovation

Proposed vs Existing
Overall Site Plan

C:\pwworking\mrm\ports_harbors\mcr69830\dms39318398289-Design-site sections.dwg Mar 23, 2020 - 2:12PM MOR69830

Provided to Builders Exchange of WA, Inc. For usage Conditions Agreement see www.bxwa.com - Always Verify Scale

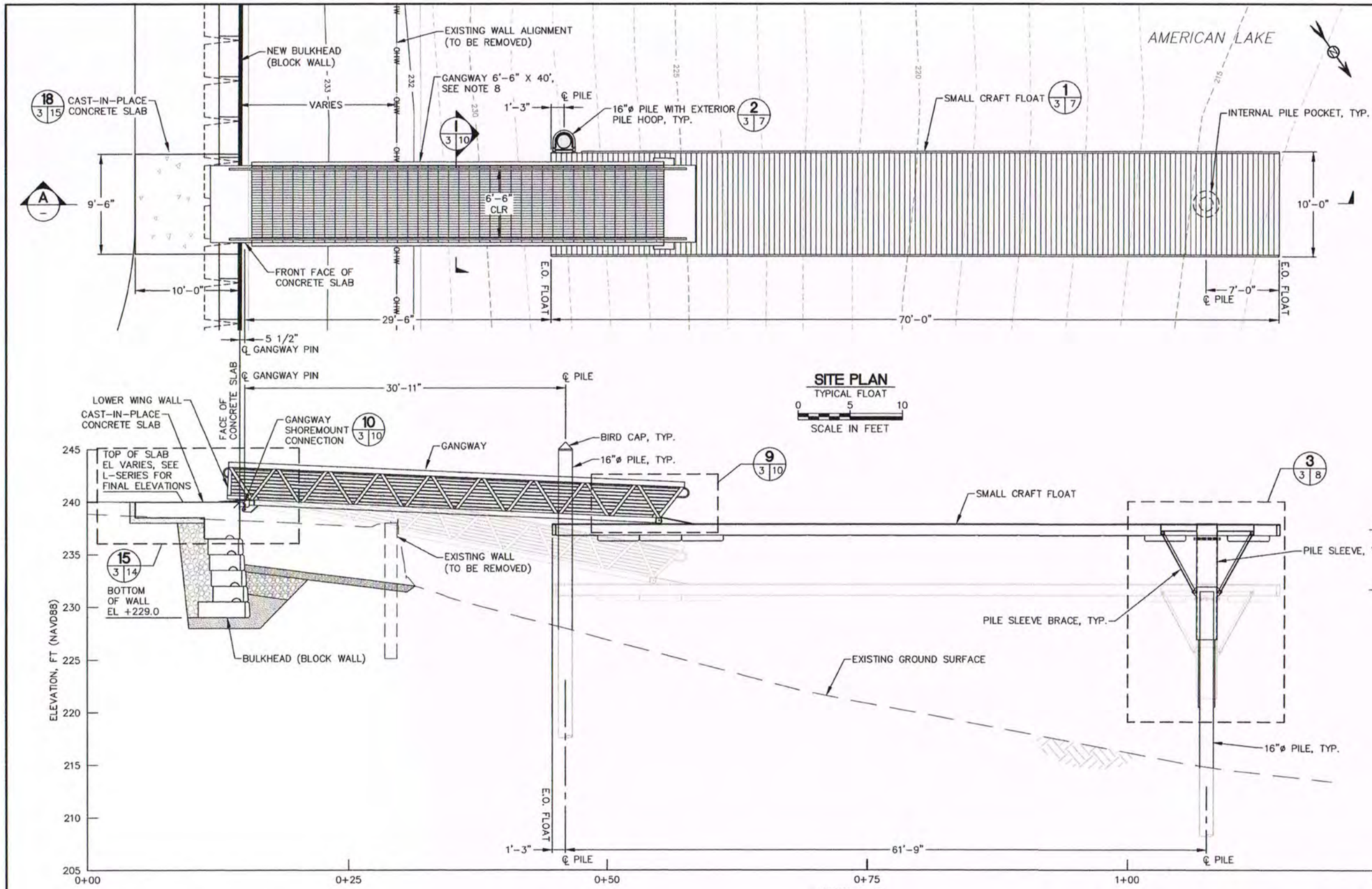

SITE PLAN
TYPICAL FLOAT
0 5 10
SCALE IN FEET

PROFILE
TYPICAL GANGWAY AND FLOAT
0 5 10
SCALE IN FEET

LEGEND

- 225 — EXISTING CONTOUR
- 233 — NEW CONTOUR
- OHW — ORDINARY HIGH WATER (OHW)
- NEW RIPRAP

NOTES

1. DETAILS FOR GANGWAY AND FLOAT ARE TYPICAL FOR DOCKS A, B, AND C.
2. FLOATING DOCK FACILITY FOR HAND CARRY VESSELS ONLY; NO MOTORIZED VESSEL MOORAGE.
3. SEE SHEET 13 FOR PILE SCHEDULE.
4. BLOCK WALL FINISH DETAILS AND GUARDRAIL NOT SHOWN.
5. HANDLING FLOATS SHALL BE MANUFACTURED TO MEET THE MATERIAL AND PERFORMANCE REQUIREMENTS AS PER THE TECHNICAL SPECIFICATIONS.
6. GAP BETWEEN GUARDRAIL AND ALUMINUM GANGWAY SHALL NOT EXCEED 4"; CONTRACTOR TO FIELD MEASURE PRIOR TO INSTALLATION OF NEW GUARDRAIL.
7. CONTRACTOR SHALL PROVIDE THE DESIGN AND SHOP DRAWINGS FOR THE GANGWAY AND FLOAT ELEMENTS, SEE TECHNICAL SPECIFICATIONS.
8. GANGWAY LENGTH DIMENSION IS GANGWAY PIN TO ROLLER PIN.

As-Built
7/2/21

MOTT MACDONALD
1601 5th Avenue
Suite 800
Seattle, Washington 98101
T +1 (425) 778 6243
F +1 (425) 778 6883
W mottmac.com

Client
City of Lakewood Parks & Recreation
Doug Fraser, Capital Project Coordinator
6000 Main Street SW
Lakewood, WA 98499
Phone: (253) 983-7652

Rev	Date	Drawn	Description	Ch'k'd	App'd
1	3/23/20	CNT	Final Design Submittal	EDE	

3/23/20

Designed	E. Edgecomb		Eng check	E. Sheesley	
Drawn	C. Taylor		Coordination		
Dwg check	E. Sheesley		Approved	S. Phillips	
Scale at ANSI D: As Noted	Status		Rev	Security	

Project Number	B/O	Total
398289	3	15

Drawing Number

Title
Harry Todd Park
Waterfront Renovation

Float Plan And Profile

C:\pwworking\mmr\ports_harbors\mott6830\dms39316\398289 Design-site sections.dwg Mar 23, 2020 - 2:12PM MCR66830

Provided to Builders Exchange of WA, Inc. For usage Conditions Agreement see www.bxwa.com - Always Verify Scale

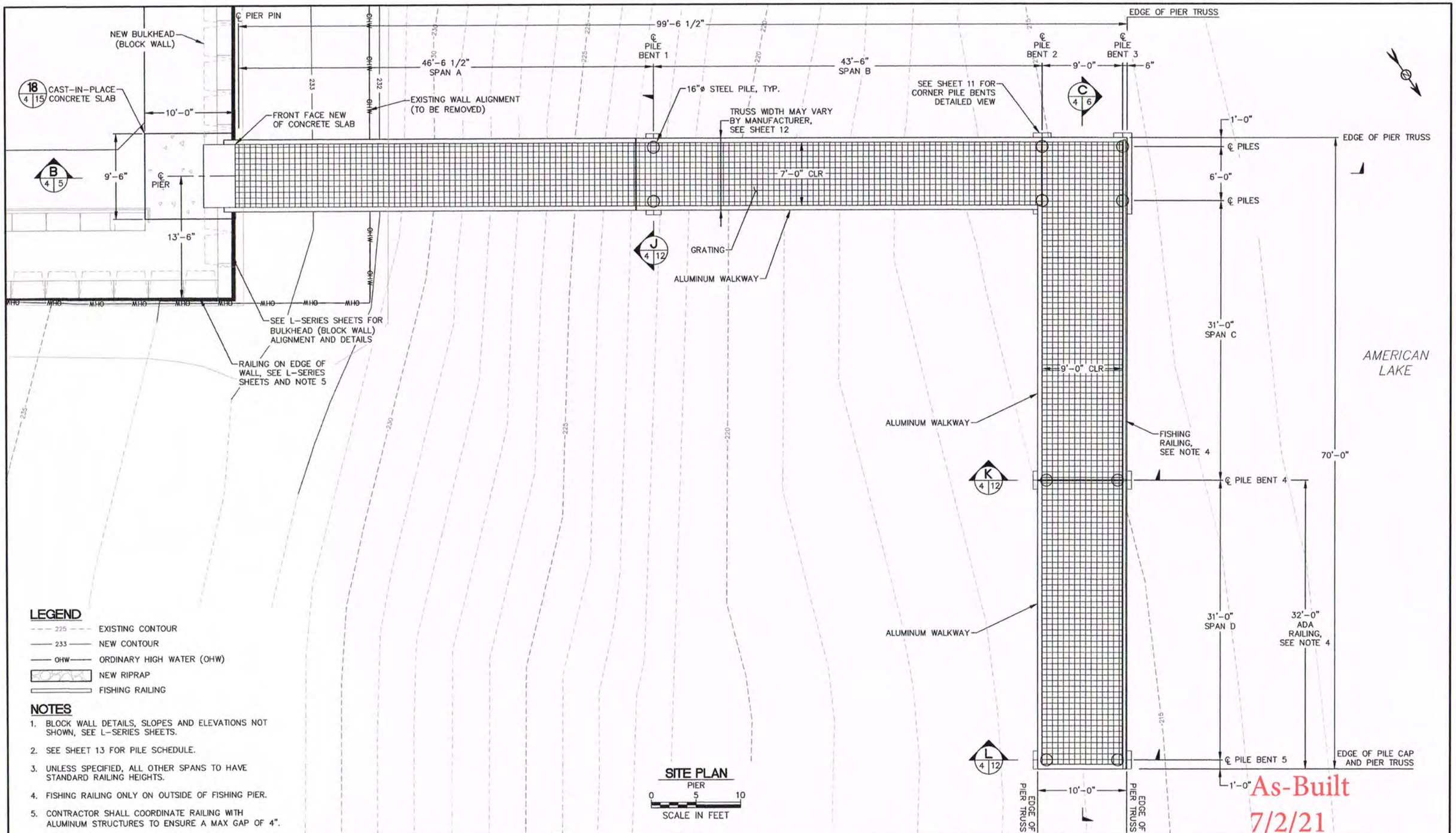

LEGEND

- 225 — EXISTING CONTOUR
- 233 — NEW CONTOUR
- OHW — ORDINARY HIGH WATER (OHW)
- NEW RIPRAP
- FISHING RAILING

NOTES

1. BLOCK WALL DETAILS, SLOPES AND ELEVATIONS NOT SHOWN, SEE L-SERIES SHEETS.
2. SEE SHEET 13 FOR PILE SCHEDULE.
3. UNLESS SPECIFIED, ALL OTHER SPANS TO HAVE STANDARD RAILING HEIGHTS.
4. FISHING RAILING ONLY ON OUTSIDE OF FISHING PIER.
5. CONTRACTOR SHALL COORDINATE RAILING WITH ALUMINUM STRUCTURES TO ENSURE A MAX GAP OF 4".

SITE PLAN
PIER
0 5 10
SCALE IN FEET

MOTT MACDONALD
1601 5th Avenue
Suite 800
Seattle, Washington 98101
T +1 (425) 778 6243
F +1 (425) 778 6883
W mottmac.com

Client
City of Lakewood Parks & Recreation
Doug Fraser, Capital Project Coordinator
6000 Main Street SW
Lakewood, WA 98499
Phone (253) 983-7852

Rev	Date	Drawn	Description	Chk'd	App'd
1	3/23/20	CNT	Final Design Submittal	EDE	

3/23/20

Designed	E. Edgecomb	Eng check	E. Sheesley
Drawn	C. Taylor	Coordination	
Dwg check	E. Sheesley	Approved	S. Phillips
Scale at ANSI D: As Noted	Status	Rev	Security

Project Number 398289 | B/O 4 | Total 15
Drawing Number

Title
Harry Todd Park
Waterfront Renovation

Pier Plan

C:\pwworking\hmm\ports_harbors\mor69830\dms39316\398289-Design-site sections.dwg Mar 23, 2020 - 2:12PM MOR69830

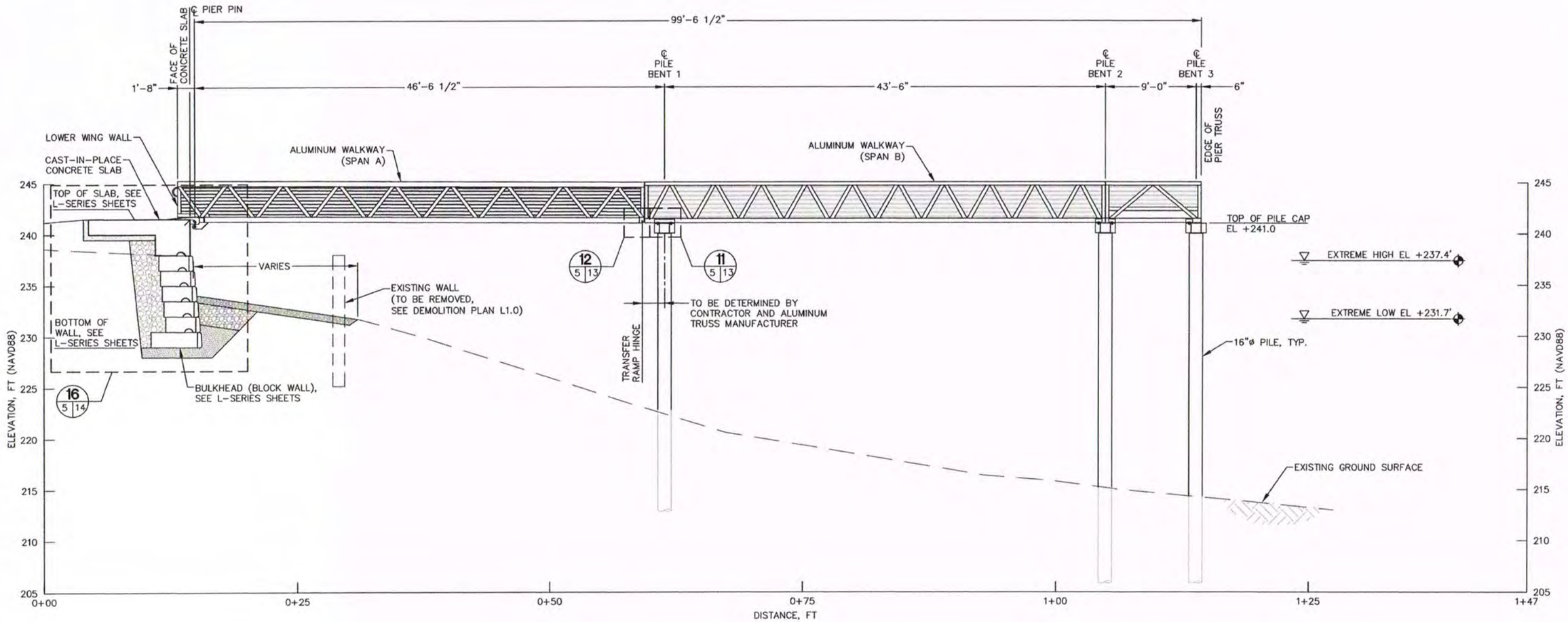

B 4 5 **ELEVATION**
PIER
0 5 10
SCALE IN FEET

As-Built
7/2/21

NOTES

1. MAX GAP BETWEEN ALUMINUM SPANS SHALL BE 2".
2. AS PART OF THE CONTRACTORS WALKWAY MANUFACTURER SHOP DRAWINGS AND DESIGN, CONSIDERATION FOR FINAL AS-BUILT LOCATION OF NEW PRECAST WALL AND SUPPORT PILE BENTS SHALL BE MADE FOR THE LENGTHS AND TOLERANCES OF THE FINAL SELECTED STRUCTURE SIZES AND WORK SEQUENCING OF BLOCK WALL RELATIVE TO PILE DRIVING.

MOTT MACDONALD
1601 5th Avenue
Suite 800
Seattle, Washington 98101
T +1 (425) 778 6243
F +1 (425) 778 6883
W mottmac.com

Client
City of Lakewood Parks & Recreation
Doug Fraser, Capital Project Coordinator
6000 Main Street SW
Lakewood, WA 98499
Phone: (253) 983-7852

Rev	Date	Drawn	Description	Ch'k'd	App'd
1	3/23/20	CNT	Final Design Submittal	EDE	

3/23/20

Designed	E. Edgecomb		Eng check	E. Sheesley	
Drawn	C. Taylor		Coordination		
Dwg check	E. Sheesley		Approved	S. Phillips	
Scale at ANSI D: As Noted	Status		Rev	Security	

Project Number	B/O	Total
398289	5	15

Drawing Number

Title
Harry Todd Park
Waterfront Renovation

Pier Profile 1

C:\pwworking\mmm\ports_harbors\mor69830\dms39318\36289-Design-site sections.dwg Mar 23, 2020 - 2:12PM MOR69830

Provided to Builders Exchange of WA, Inc. For usage Conditions Agreement see www.bxwa.com - Always Verify Scale

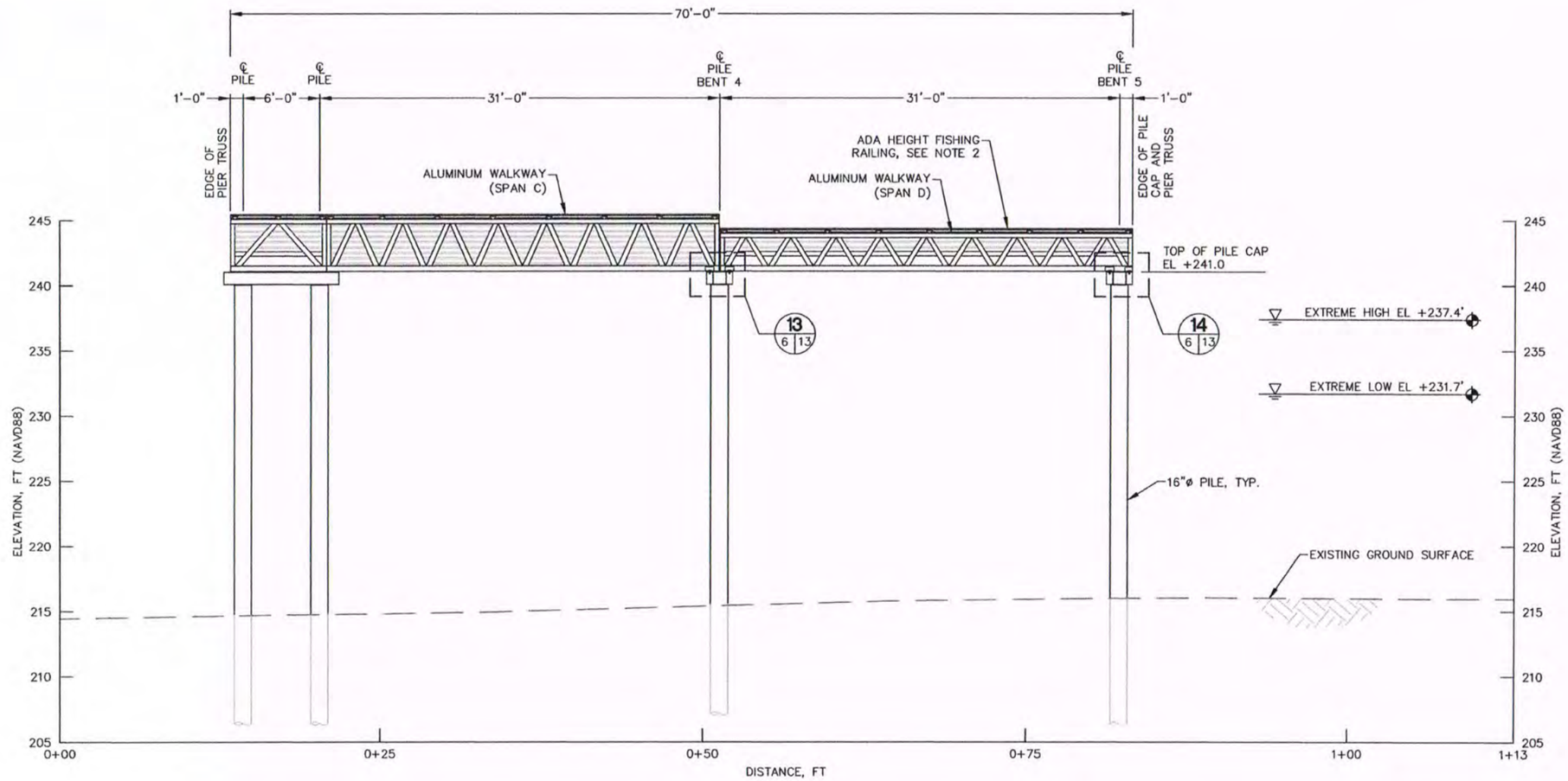

C 4 6 **ELEVATION**
PIER
0 5 10
SCALE IN FEET

NOTES

1. MAX GAP BETWEEN ALUMINUM SPANS SHALL BE 2".
2. TOP RAIL LOWER ON LAKESIDE SPAN D FOR ADA FISHING AREA.
3. AS PART OF THE CONTRACTORS WALKWAY MANUFACTURER SHOP DRAWINGS AND DESIGN, CONSIDERATION FOR FINAL AS-BUILT LOCATION OF NEW PRECAST WALL AND SUPPORT PILE BENTS SHALL BE MADE FOR THE LENGTHS AND TOLERANCES OF THE FINAL SELECTED STRUCTURE SIZES AND WORK SEQUENCING OF BLOCK WALL RELATIVE TO PILE DRIVING.

As-Built
7/2/21

MOTT MACDONALD
1601 5th Avenue
Suite 800
Seattle, Washington 98101
T +1 (425) 778 6243
F +1 (425) 778 6883
W mottmac.com

Client
City of Lakewood Parks & Recreation
Doug Fraser, Capital Project Coordinator
6000 Main Street SW
Lakewood, WA 98499
Phone (253) 983-7852

Rev	Date	Drawn	Description	Ch'k'd	App'd
1	3/23/20	CNT	Final Design Submittal	EDE	

3/23/20

Project Number	B/O	Total
398289	6	15

Designed	E. Edgecomb		Eng check	E. Sheesley	
Drawn	C. Taylor		Coordination		
Dwg check	E. Sheesley		Approved	S. Phillips	
Scale at ANSI D: As Noted	Status		Rev	Security	
Drawing Number					

Title
Harry Todd Park
Waterfront Renovation

Pier Profile 2

C:\pwworking\hm\ports_harbors\mot69830\dms39318\398289 Design-ste sections.dwg Mar 23, 2020 - 2:12PM MOR69830

Reproduced Public Exclusive of WFA, Inc. Exclusive Conditions Agreement see www.bwa.com - Always Verify Scale

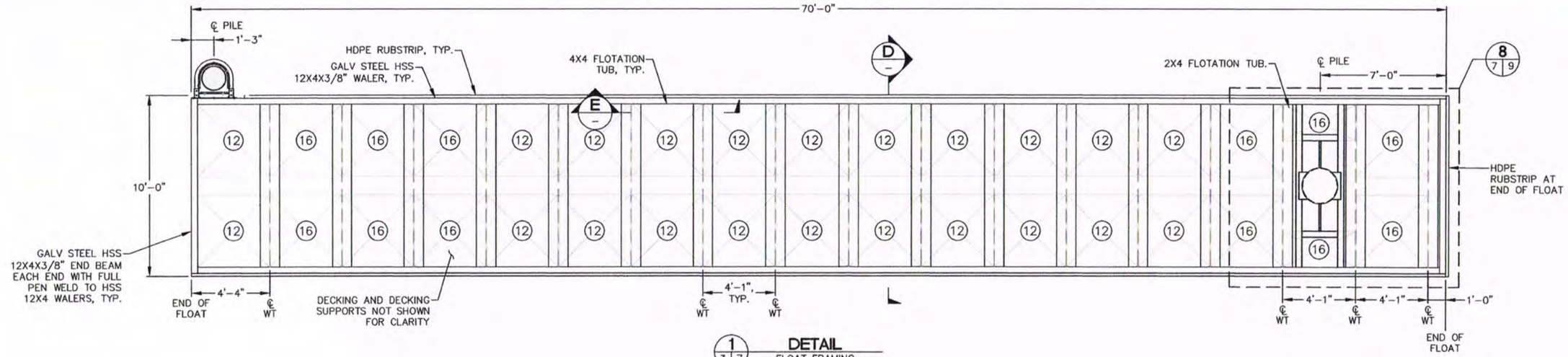

1 / 3 7 **DETAIL** FLOAT FRAMING

0 3 6 SCALE IN FEET

LEGEND

(16) FLOAT TUB DEPTH (INCHES)

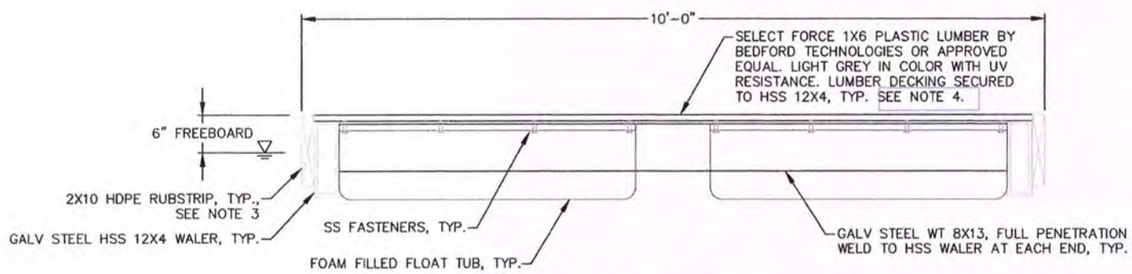

D **SECTION** FLOAT

0 1 2 SCALE IN FEET

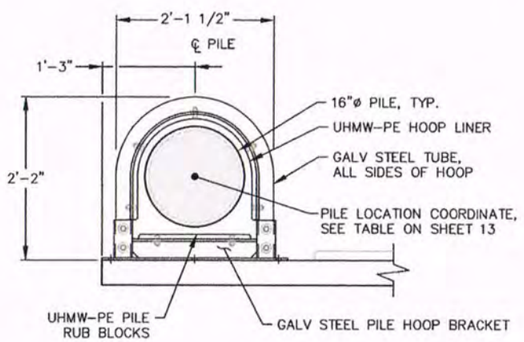

2 / 3 7 **DETAIL** EXTERNAL PILE HOOP

0 1 2 SCALE IN FEET

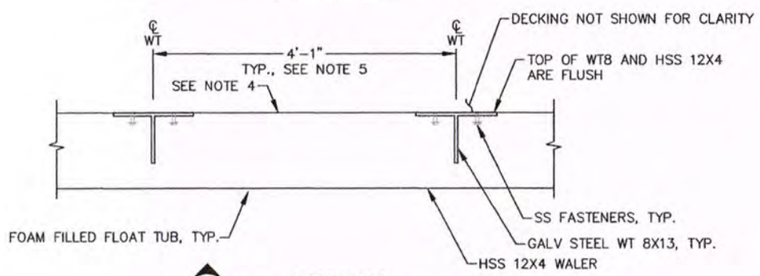

E **SECTION** FLOAT

0 1 2 SCALE IN FEET

NOTES

1. SMALL CRAFT FLOAT FRAMES SHALL BE FABRICATED OF STEEL MATERIALS. FLOAT CONSTRUCTION MATERIALS, GEOMETRY, AND FABRICATION REQUIREMENTS SHALL MEET THE DRAWINGS AND TECHNICAL SPECIFICATION REQUIREMENTS.
2. FLOATS SHOWN DEPICT THE GENERAL LAYOUT AND GEOMETRY. IT SHALL BE THE CONTRACTOR'S RESPONSIBILITY TO PROVIDE STRUCTURAL MEMBERS OF ADEQUATE SIZE AT ADEQUATE SPACING AND FLOTATION UNITS NUMBER AND SIZE AS REQUIRED TO MEET THE PERFORMANCE REQUIREMENTS AS PER THE TECHNICAL SPECIFICATIONS. CONTRACTOR SHALL BE PREPARED FOR INSTALLATION OF SUPPLEMENT FLOTATION AND BALLAST TO LEVEL FLOAT ONCE INSTALLED.
3. CHAMFER OR ROUND TOP AND BOTTOM OUTSIDE EDGES 3/8". ATTACH WITH (2) ROWS OF 3/8"ø SS FH LARGE HEAD BOLTS INTO TAPPED HOLES IN 12"X4" WALERS, CSC HEAD OF BOLT 1/4" INTO OVERSIZE HOLE IN RUBSTRIP. MAXIMUM LENGTH IS 8'-0" FOR A SINGLE PIECE OF RUBSTRIP. PROVIDE GAPS BETWEEN ENDS OF PIECES FOR THERMAL EXPANSION.
4. INSTALL AND WELD STEEL PLATES BETWEEN WT FLANGES TO SUPPORT DECKING ON TOP OF THE FLOTATION TO CREATE SOLID DECKING SUPPORT, MAX 2' OC,. TYP.
5. FLOAT MANUFACTURER SHALL ADJUST SPACING AS NECESSARY TO ENSURE TUBS CAN BE INSTALLED

As-built
7/2/21

MOTT MACDONALD
1601 5th Avenue
Suite 800
Seattle, Washington 98101
T +1 (425) 778 6243
F +1 (425) 778 6883
W mottmac.com

Client

City of Lakewood Parks & Recreation
Doug Fraser, Capital Project Coordinator
6000 Main Street SW
Lakewood, WA 98499
Phone: (253) 983-7652

Rev	Date	Drawn	Description	Ch'k'd	App'd
1	3/23/20	CNT	Final Design Submittal	EDE	

3/23/20

Project Number	B/O	Total
398289	7	15

Designed	E. Edgecomb		Eng check	E. Sheesley	
Drawn	C. Taylor		Coordination		
Dwg check	E. Sheesley		Approved	S. Phillips	
Scale at ANSI D: As Noted	Status		Rev	Security	
Drawing Number					

Title
Harry Todd Park
Waterfront Renovation

Float Details

C:\pwworking\hmm\ports_harbors\mor69830\dms39318398289-Design-site sections.dwg Mar 23, 2020 - 2:12PM MOR69830

Provided to Builders Exchange of WA, Inc. For usage Conditions Agreement see www.bxwa.com - Always Verify Scale

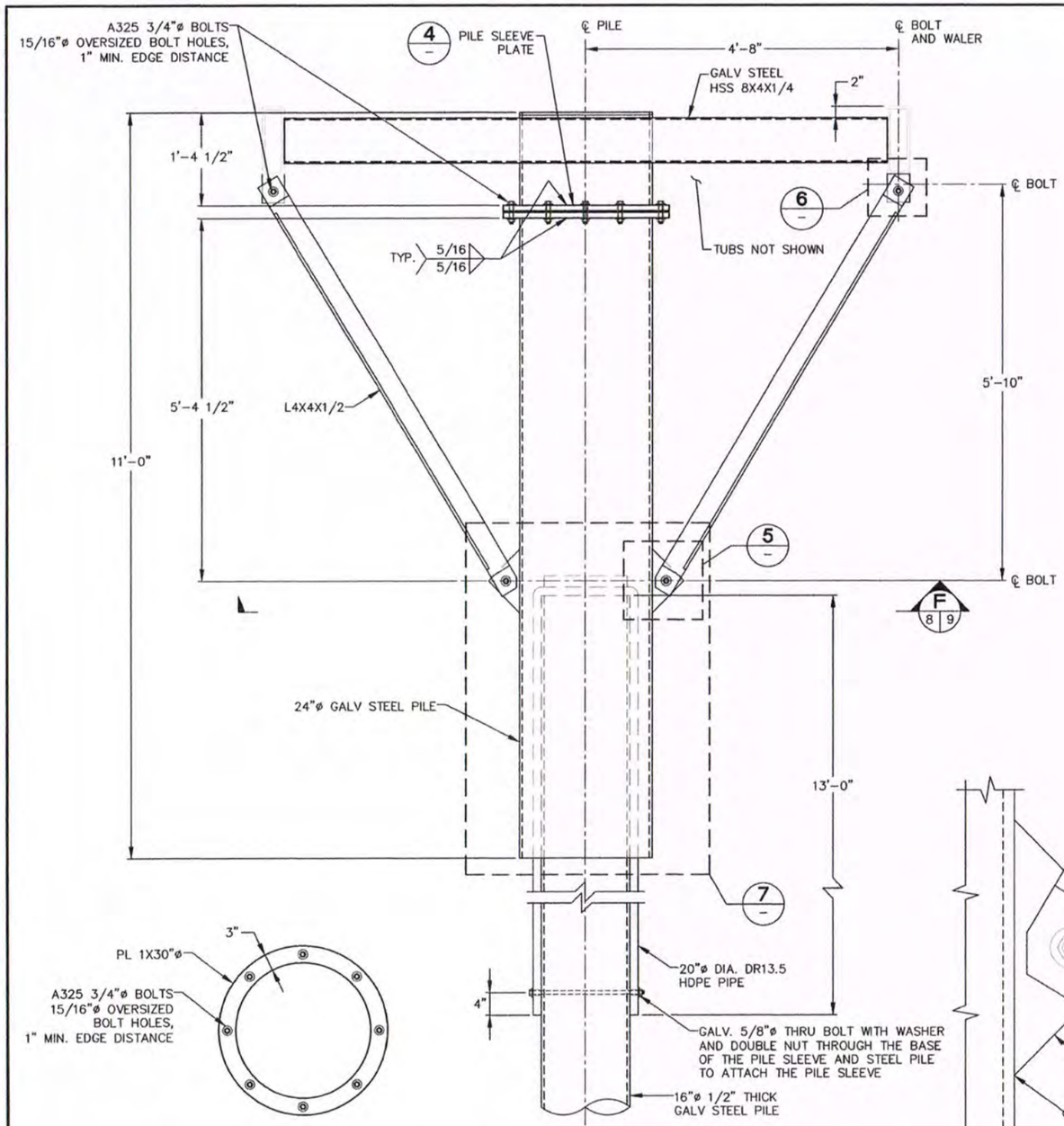

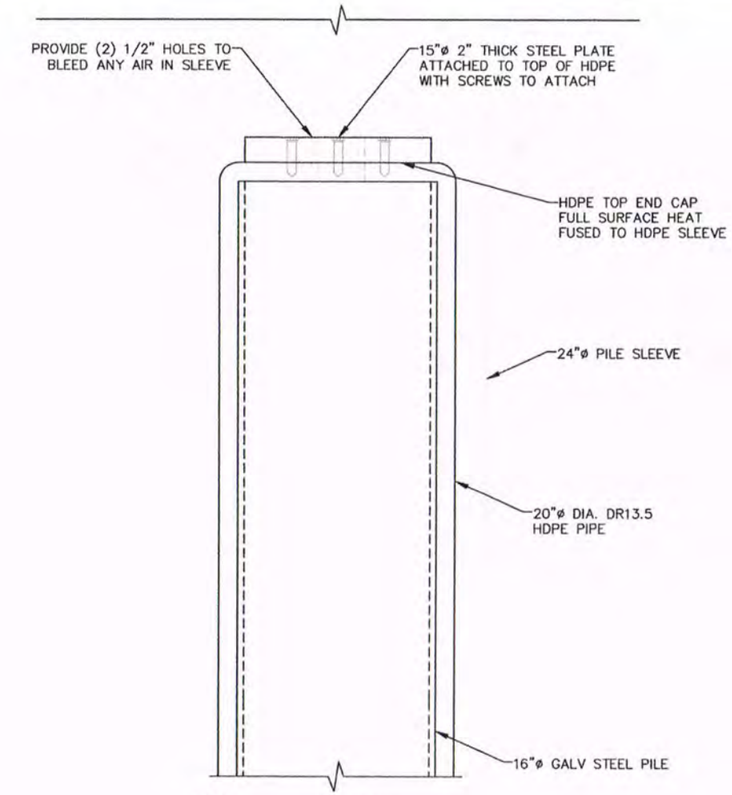

7 DETAIL
HDPE UNDERWATER SLEEVE
0 6 12
SCALE IN INCHES

4 DETAIL
PILE SLEEVE PLATE
0 1 2
SCALE IN FEET

3 DETAIL
3 8
PILE SLEEVE BRACE
0 1 2
SCALE IN FEET

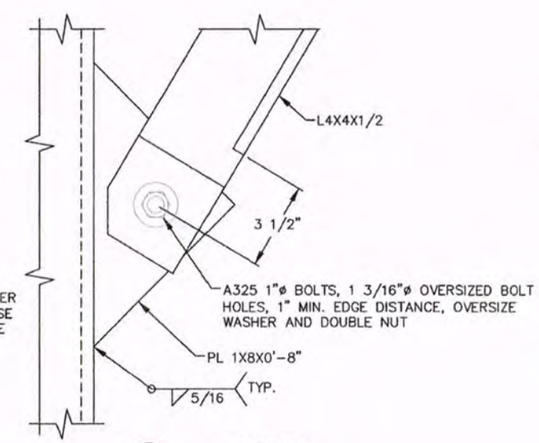

5 DETAIL
PILE SLEEVE BRACE
0 3 6
SCALE IN INCHES

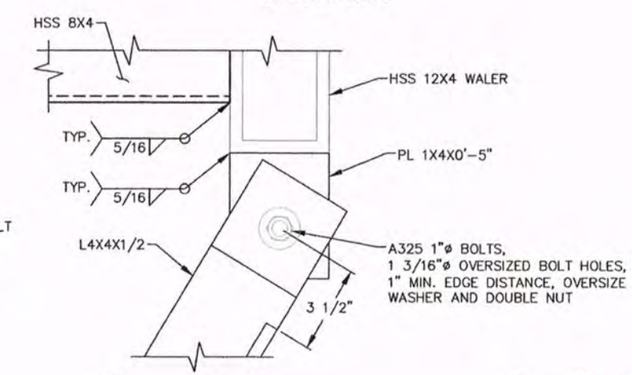

6 DETAIL
PILE SLEEVE BRACE
0 3 6
SCALE IN INCHES

As-Built
7/2/21

MOTT MACDONALD
1601 5th Avenue
Suite 800
Seattle, Washington 98101
T +1 (425) 778 6243
F +1 (425) 778 6883
W mottmac.com

Client
City of Lakewood Parks & Recreation
Doug Fraser, Capital Project Coordinator
6000 Main Street SW
Lakewood, WA 98499
Phone (253) 983-7852

Rev	Date	Drawn	Description	Ch'k'd	App'd
1	3/23/20	CNT	Final Design Submittal	EDE	

3/23/20

Project Number	B/O	Total
398289	8	15

Designed	E. Edgecomb		Eng check	E. Sheesley	
Drawn	C. Taylor		Coordination		
Dwg check	E. Sheesley		Approved	S. Phillips	
Scale at ANSI D: As Noted	Status		Rev	Security	
Drawing Number					

Title
Harry Todd Park
Waterfront Renovation

Pile Sleeve Details

C:\pwworking\hmm\ports_harbors\mor69830\dms39316\398289 Design-site sections.dwg Mar 23, 2020 - 2:12PM MOR69830

Provided to Builders Exchange of WA, Inc. For usage Conditions Agreement see www.bxwa.com - Always Verify Scale

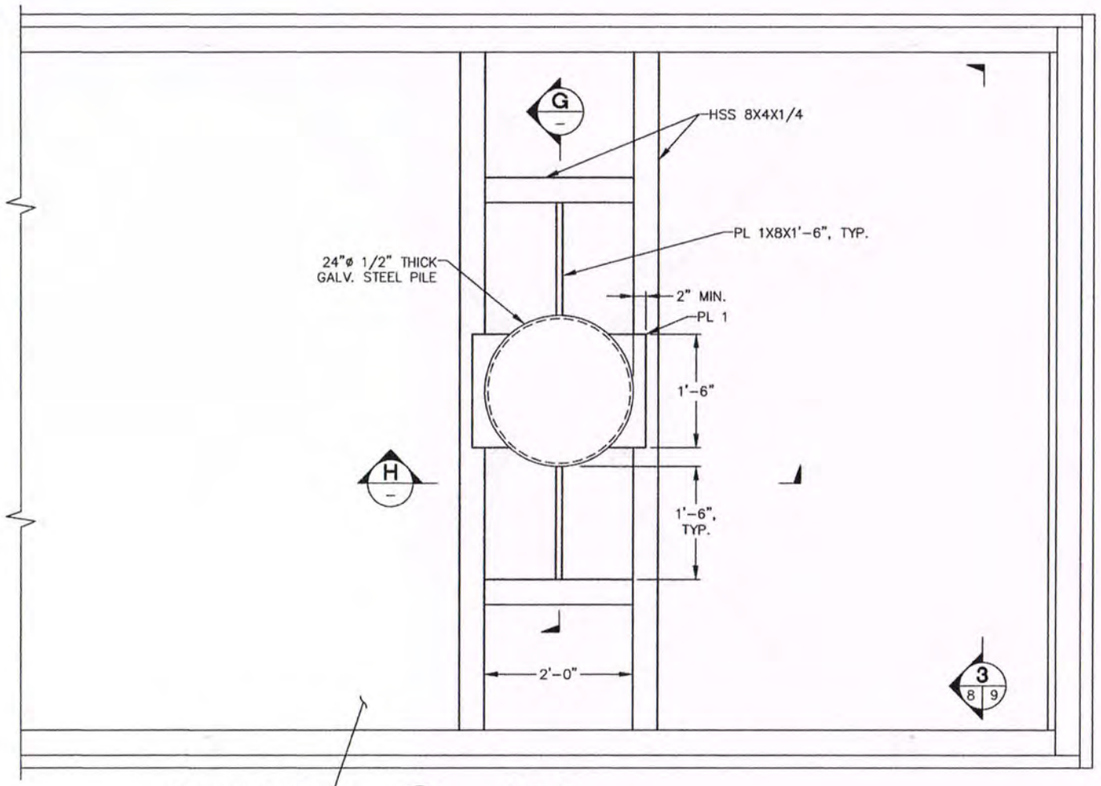

8 / 7 9 **DETAIL**
PILE SLEEVE CONNECTION TO FLOAT
0 1 2
SCALE IN FEET

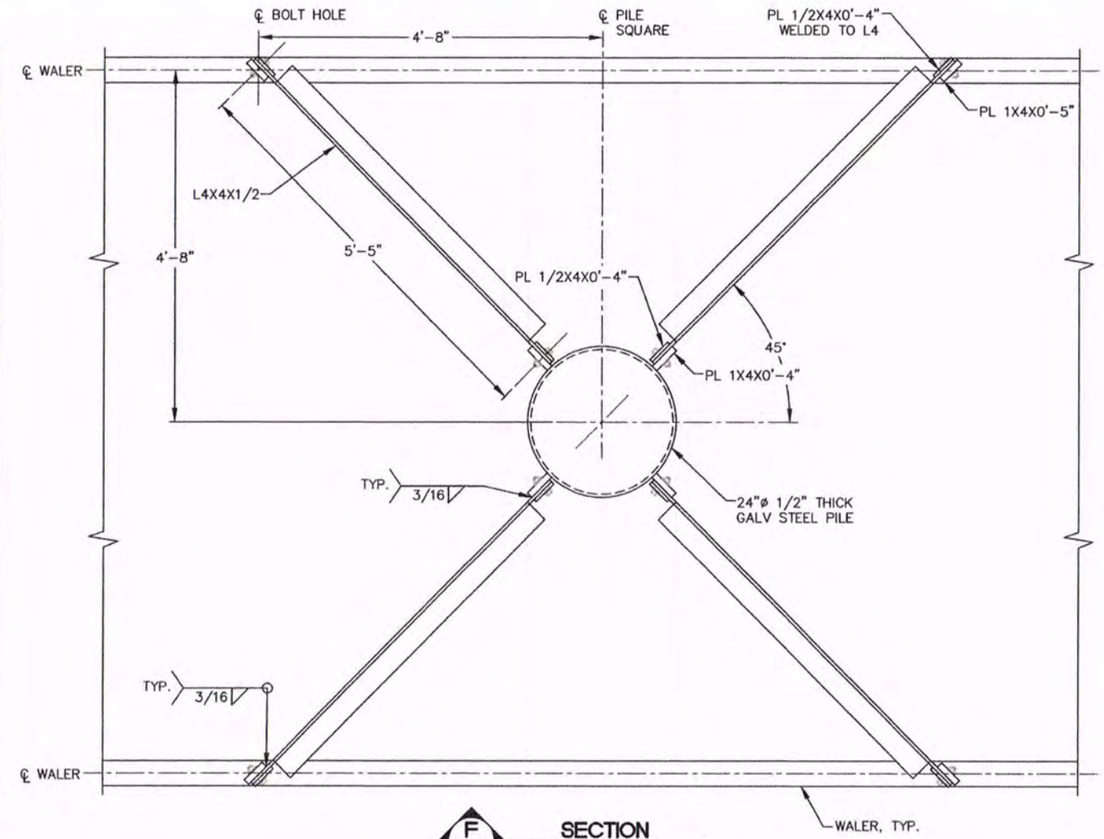

F / 8 9 **SECTION**
PILE SLEEVE BRACE
0 1 2
SCALE IN FEET

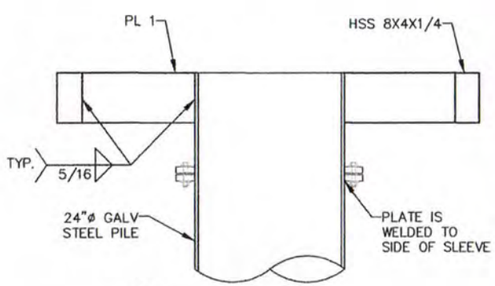

G / – **SECTION**
PILE SLEEVE PLATE
0 1 2
SCALE IN FEET

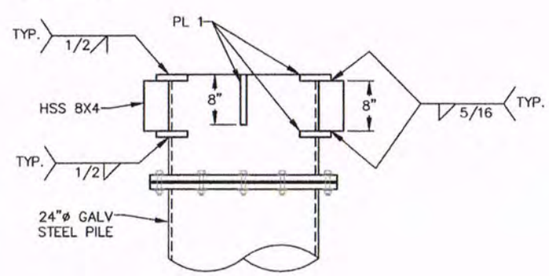

H / – **SECTION**
PILE SLEEVE PLATE
0 1 2
SCALE IN FEET

As-Built
7/2/21

MOTT MACDONALD
1601 5th Avenue
Suite 800
Seattle, Washington 98101
T +1 (425) 778 6243
F +1 (425) 778 6883
W mottmac.com

Client
City of Lakewood Parks & Recreation
Doug Fraser, Capital Project Coordinator
6000 Main Street SW
Lakewood, WA 98499
Phone: (253) 983-7852

Rev	Date	Drawn	Description	Ch'k'd	App'd
1	3/23/20	CNT	Final Design Submittal	EDE	

3/23/20

Project Number 398289	B/O 9	Total 15			

Designed	E. Edgecomb		Eng check	E. Sheesley	
Drawn	C. Taylor		Coordination		
Dwg check	E. Sheesley		Approved	S. Phillips	
Scale at ANSI D: As Noted	Status		Rev	Security	
Drawing Number					

Title
Harry Todd Park
Waterfront Renovation

Pile Sleeve Details 2

C:\pwworking\mm\ports_harbors\mc69830\dms39319\398289 Design-site sections.dwg Mar 23, 2020 - 2:12PM MCR69830

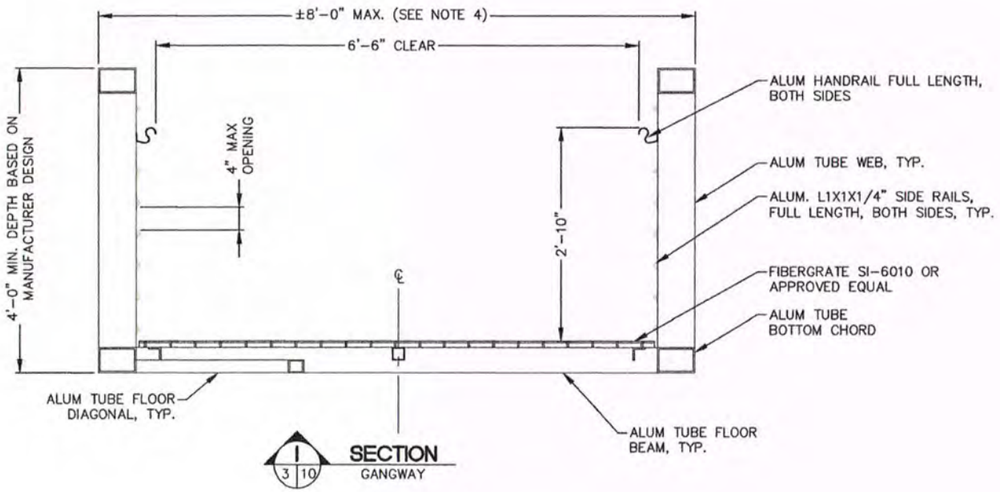

1 | 3 10 **SECTION**
GANGWAY

0 1 2
SCALE IN FEET

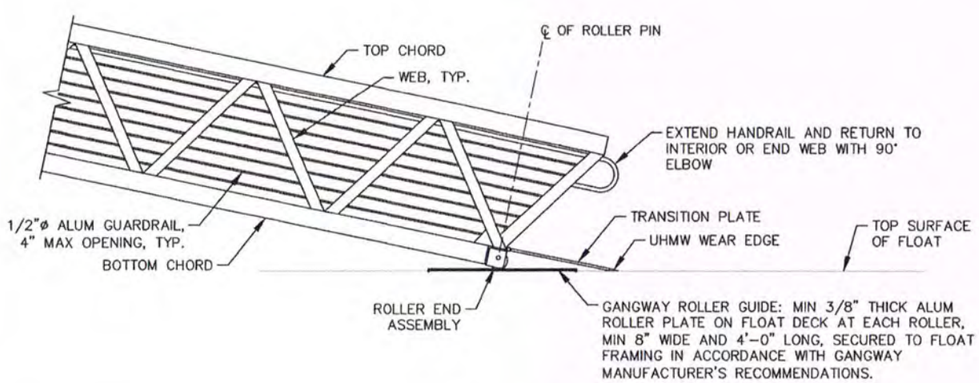

9 | 3 10 **DETAIL**
FLOAT SUPPORT

0 2 4
SCALE IN FEET

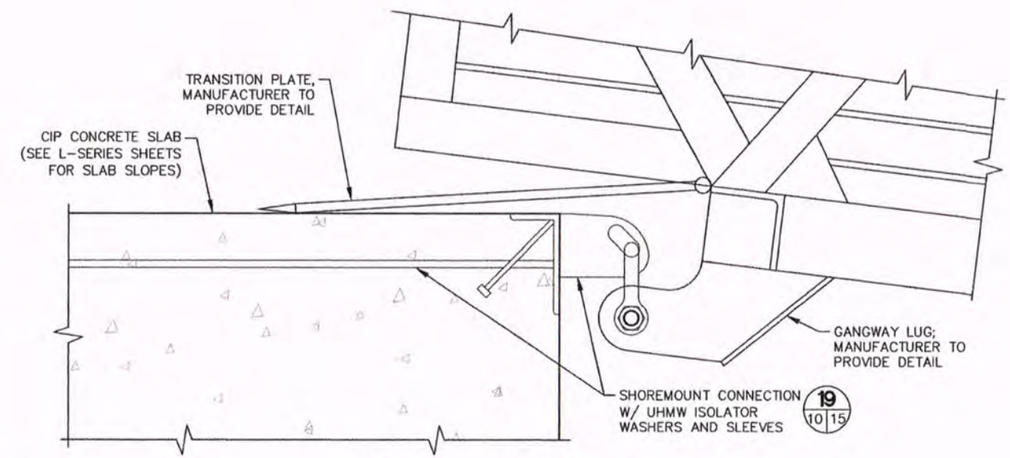

10 | 3 10 **DETAIL**
WALKWAY – GANGWAY CONNECTION

0 6 12
SCALE IN INCHES

NOTES

1. PERFORMANCE CRITERIA:
   A. GANGWAY AND TRANSFER RAMP ARE DESIGN–BUILD BY MANUFACTURER TO MEET TECHNICAL SPECIFICATIONS.
2. GANGWAY AND ITS CONNECTIONS SHALL BE DESIGNED TO ACCOMMODATE FULL RANGE OF MOTION BETWEEN MIN AND MAX WATER LEVELS. ROLLER GUIDE TO BE POSITIONED TO ENSURE ROLLER REMAINS ON GUIDE FOR THE FULL RANGE OF MOTION FOR SPECIFIED WATER LEVEL RANGE.
3. FINAL DESIGN OF GANGWAYS AND TRANSFER RAMP SHALL BE AS PER MANUFACTURER.
4. FINAL DESIGN OF WALKWAYS SHALL BE AS PER MANUFACTURER.

As-Built
7/2/21

MOTT MACDONALD
1601 5th Avenue
Suite 800
Seattle, Washington 98101
T +1 (425) 778 6243
F +1 (425) 778 6883
W mottmac.com

Client
City of Lakewood Parks & Recreation
Doug Fraser, Capital Project Coordinator
6000 Main Street SW
Lakewood, WA 98499
Phone: (253) 983-7652

Rev	Date	Drawn	Description	Ch'k'd	App'd
1	3/23/20	CNT	Final Design Submittal	EDE	

3/23/20

Project Number	B/O	Total
398289	10	15

Designed	E. Edgecomb		Eng check	E. Sheesley	
Drawn	C. Taylor		Coordination		
Dwg check	E. Sheesley		Approved	S. Phillips	
Scale at ANSI D: As Noted	Status		Rev	Security	
Drawing Number					

Title
Harry Todd Park
Waterfront Renovation

Gangway Details

C:\pwworking\mmports_harbors\mcr69830\dms39316\398289 Design-site sections.dwg Mar 23, 2020 - 2:12PM MOR69830

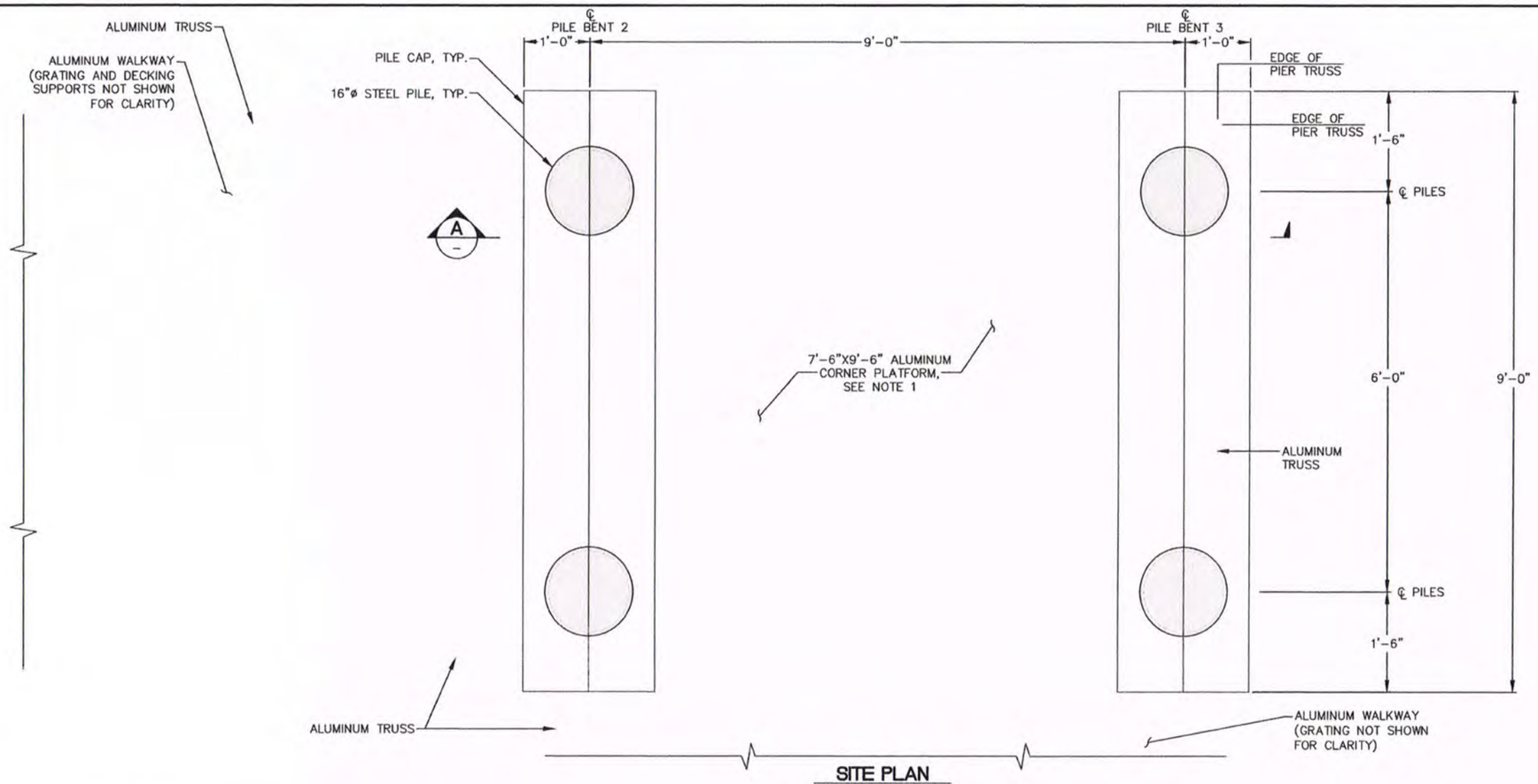

SITE PLAN

CORNER PILE BENTS

0 1 2

SCALE IN FEET

NOTES

1. THE CORNER PLATFORM CAN BE SEPARATE OR A CONTINUOUS PIECE OF THE WALKWAY SPAN BUT SHALL BE UP TO THE ALUMINUM DESIGNER AND CONTRACTOR HOW IT IS DESIGNED AND INSTALLED. THERMAL EXPANSION SHALL BE CONSIDERED AND INCORPORATED INTO THE DESIGN.

AMERICAN LAKE

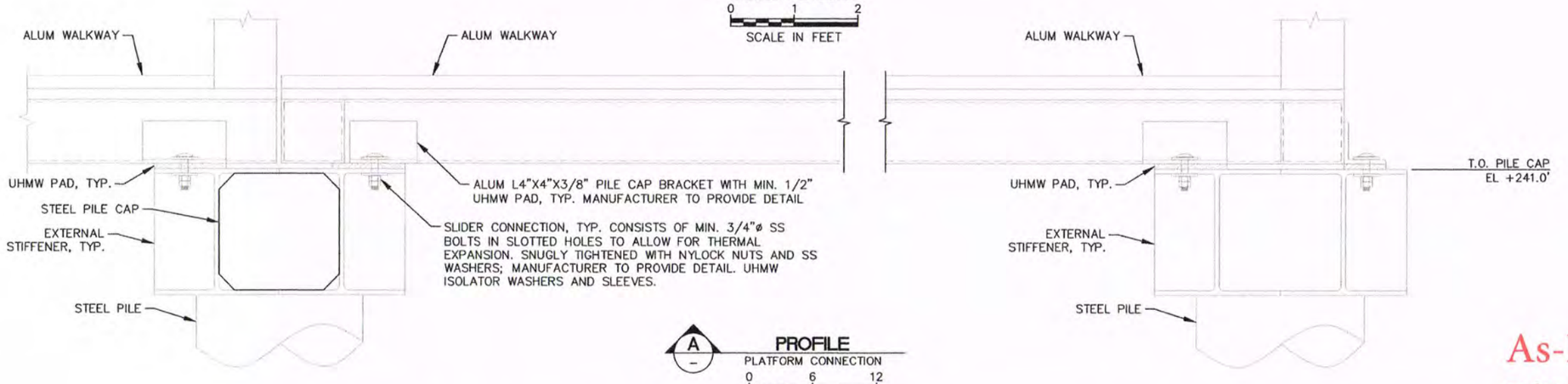

PROFILE

A

PLATFORM CONNECTION

0 6 12

SCALE IN INCHES

As-Built
7/2/21

MOTT MACDONALD

1601 5th Avenue
Suite 800
Seattle, Washington 98101

T +1 (425) 778 6243
F +1 (425) 778 6883
W mottmac.com

Client

City of Lakewood Parks & Recreation
Doug Fraser, Capital Project Coordinator
6000 Main Street SW
Lakewood, WA 98499
Phone: (253) 983-7852

Rev	Date	Drawn	Description	Ch'k'd	App'd
1	3/23/20	CNT	Final Design Submittal	EDE	

3/23/20

Project Number	B/O	Total
398289	11	15

Designed	E. Edgecomb		Eng check	E. Sheesley	
Drawn	C. Taylor		Coordination		
Dwg check	E. Sheesley		Approved	S. Phillips	

Scale at ANSI D: As Noted | Status | Rev | Security

Drawing Number

Title

Harry Todd Park
Waterfront Renovation

Pier Platform
Turning Platform

C:\pwworking\hmm\ports_harbors\mcr69830\dms39316\398289 Design site sections.dwg Mar 23, 2020 - 2:13PM MCR69830

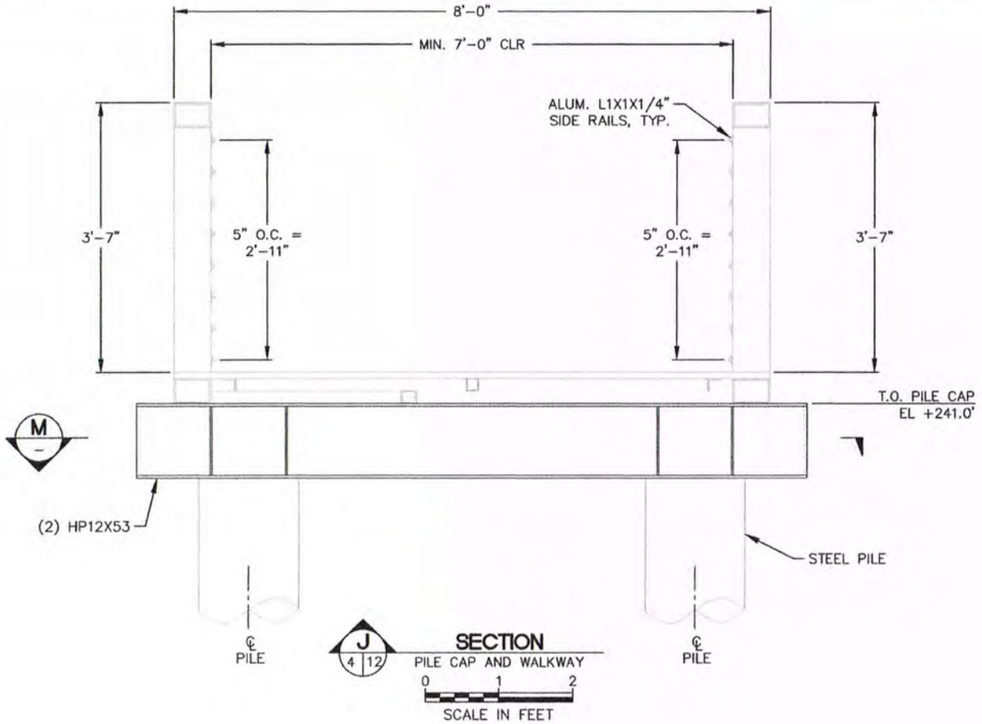

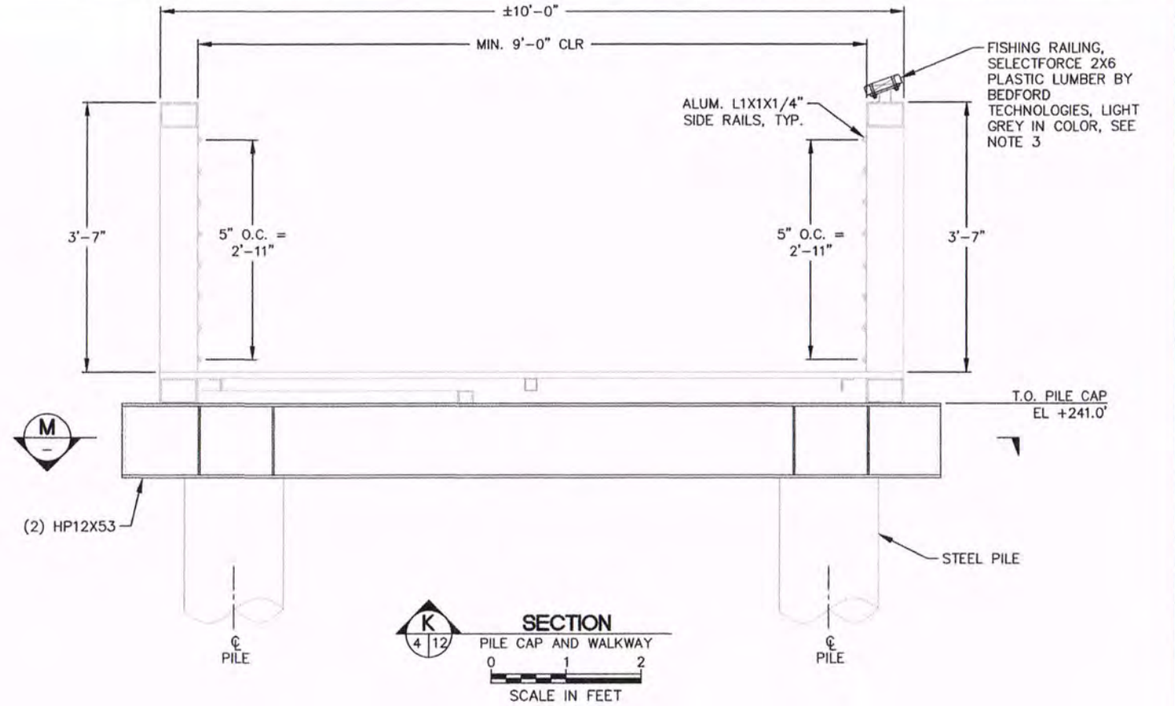

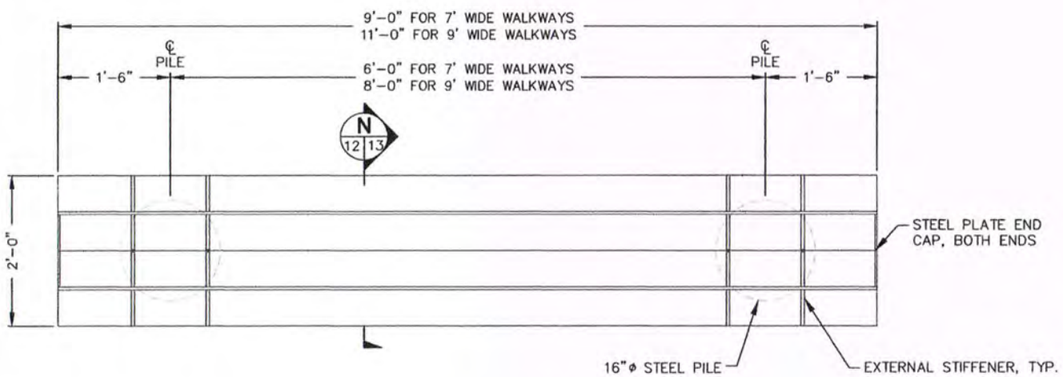

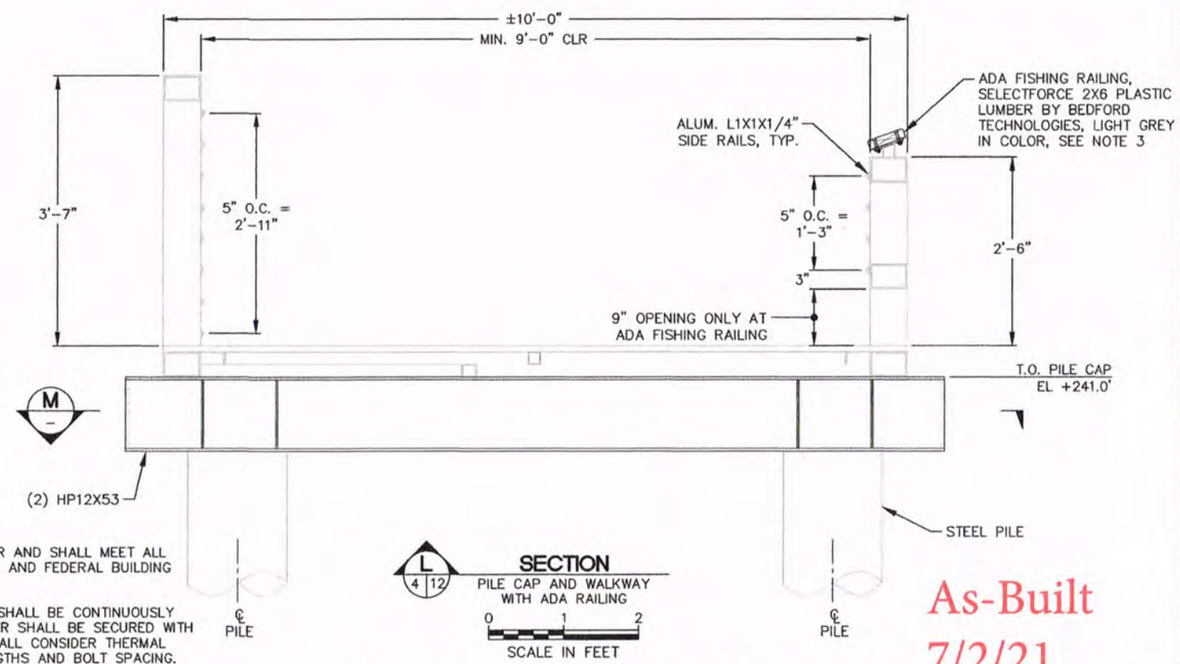

NOTES

1. SEE SHEET 13 FOR PILE SCHEDULE.
2. FINAL DESIGN OF WALKWAYS SHALL BE AS PER MANUFACTURER AND SHALL MEET ALL REQUIREMENTS OF THE SPECIFICATIONS AND LOCAL AND STATE AND FEDERAL BUILDING CODE REQUIREMENTS.
3. PLASTIC LUMBER SHALL BE UV RESISTANCE. PLASTIC LUMBER SHALL BE CONTINUOUSLY SUPPORTED BY A CONTINUOUS BACKER PLATE. PLASTIC LUMBER SHALL BE SECURED WITH VANDAL PROOF STAINLESS STEEL BOLTS. THE CONTRACTOR SHALL CONSIDER THERMAL EXPANSION OF THE PLASTIC IN DETERMINING THE LUMBER LENGTHS AND BOLT SPACING.

As-Built
7/2/21

MOTT MACDONALD
1601 5th Avenue
Suite 800
Seattle, Washington 98101
T +1 (425) 778 6243
F +1 (425) 778 6883
W mottmac.com

Client
City of Lakewood Parks & Recreation
Doug Fraser, Capital Project Coordinator
6000 Main Street SW
Lakewood, WA 98499
Phone: (253) 983-7852

Rev	Date	Drawn	Description	Ch'k'd	App'd
1	3/23/20	CNT	Final Design Submittal	EDE	

3/23/20

Project Number	B/O	Total
398289	12	15

Designed	E. Edgecomb	Eng check	E. Sheesley
Drawn	C. Taylor	Coordination	
Dwg check	E. Sheesley	Approved	S. Phillips
Scale at ANSI D: As Noted	Status	Rev	Security
Drawing Number			

Title
Harry Todd Park
Waterfront Renovation

Pier Details 1

C:\pwworking\mm\ports_harbors\mcr69830\dms39318\398289 Design-site sections.dwg Mar 23, 2020 - 2:13PM MCR69830

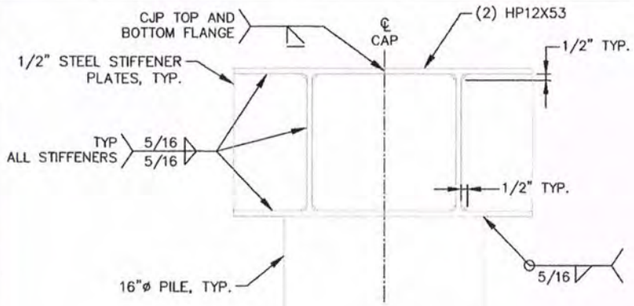

N 12 13 **SECTION**
PILE CAP
0 6 12
SCALE IN INCHES

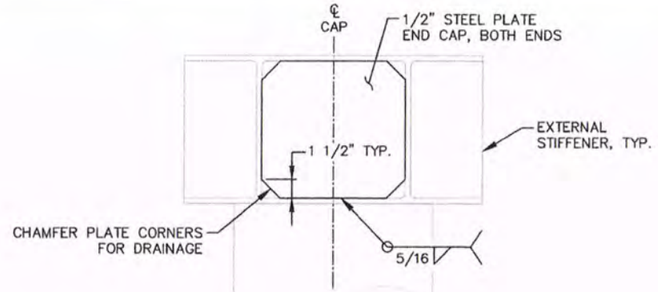

11 5 13 **DETAIL**
PILE CAP END
0 6 12
SCALE IN INCHES

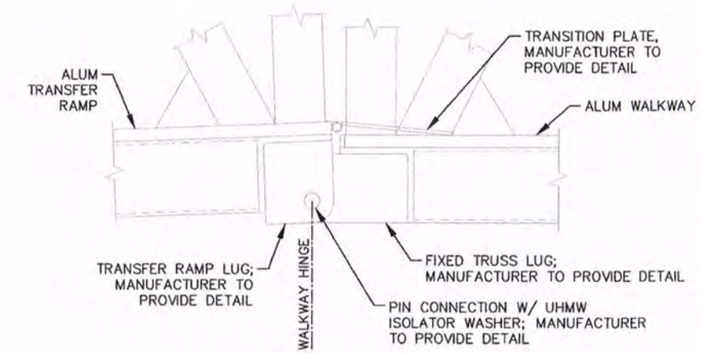

12 5 13 **DETAIL**
WALKWAY – TRANSFER RAMP CONNECTION
0 6 12
SCALE IN INCHES

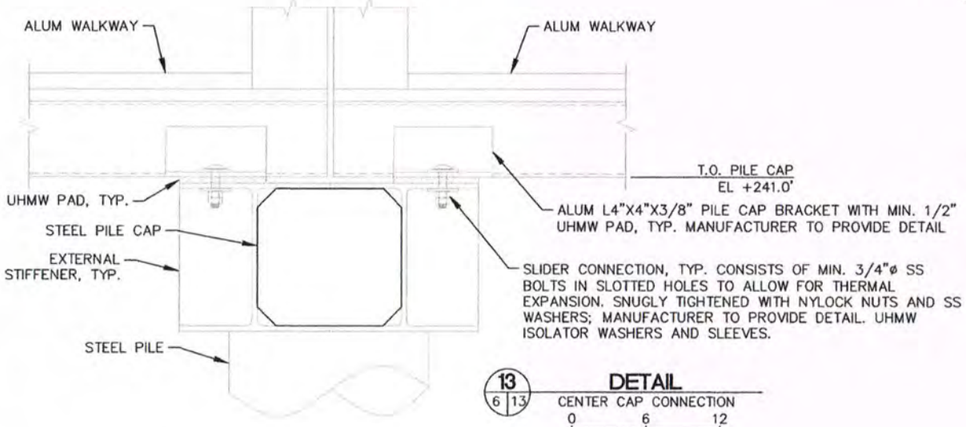

13 6 13 **DETAIL**
CENTER CAP CONNECTION
0 6 12
SCALE IN INCHES

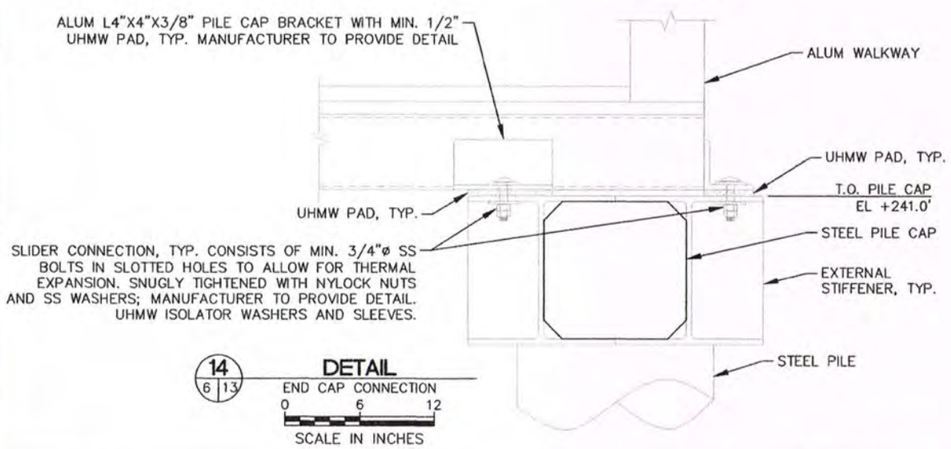

14 6 13 **DETAIL**
END CAP CONNECTION
0 6 12
SCALE IN INCHES

PILE SCHEDULE

PILE	STRUCTURE	OUTSIDE PILE DIA (IN)	WALL THICKNESS (IN)	PILE TIP EL (FT)	PILE CUTOFF EL (FT)	PILE TIP
G1–1	FLOAT	16	0.5	191.0'	246.0'	SHOE
G1–2	FLOAT	16	0.5	177.0'	230.5'	SHOE
G2–1	FLOAT	16	0.5	191.0'	246.0'	SHOE
G2–2	FLOAT	16	0.5	177.0'	230.5'	SHOE
G3–1	FLOAT	16	0.5	191.0'	246.0'	SHOE
G3–2	FLOAT	16	0.5	177.0'	230.5'	SHOE
P–1	PIER	16	0.5	195.2'	240.0'	SHOE
P–2	PIER	16	0.5	195.2'	240.0'	SHOE
P–3	PIER	16	0.5	190.2'	240.0'	SHOE
P–4	PIER	16	0.5	190.2'	240.0'	SHOE
P–5	PIER	16	0.5	190.2'	240.0'	SHOE
P–6	PIER	16	0.5	190.2'	240.0'	SHOE
P–7	PIER	16	0.5	190.2'	240.0'	SHOE
P–8	PIER	16	0.5	190.2'	240.0'	SHOE
P–9	PIER	16	0.5	190.2'	240.0'	SHOE
P–10	PIER	16	0.5	190.2'	240.0'	SHOE

1. THE CONTRACTOR AND PROJECT SURVEYOR SHALL BE RESPONSIBLE TO VERIFY THE PROPOSED PILE COORDINATES AND THAT THEY MATCH WITH THE PROPOSED PRECAST BLOCK WALL LOCATIONS AND ALIGNMENT PRIOR TO PILE INSTALLATION. THE CONTRACTOR SHALL SUBMIT A SOLUTION TO ANY COORDINATE AND LOCATION DISCREPANCIES AND SHALL SUBMIT TO THE OWNER FOR REVIEW AND APPROVAL.
2. IF THE WALL AS–BUILT ADJUSTS, THE LOCATIONS OF THE PROPOSED PILES MAY NEED TO BE ADJUSTED.
3. MINIMUM PILE AXIAL CAPACITY OF PIER PILES SHOULD BE 75 KIPS PER THE FHWA GATES FORMULA.

As-Built
7/2/21

MOTT MACDONALD
1601 5th Avenue
Suite 800
Seattle, Washington 98101
T +1 (425) 778 6243
F +1 (425) 778 6883
W mottmac.com

Client
City of Lakewood Parks & Recreation
Doug Fraser, Capital Project Coordinator
6000 Main Street SW
Lakewood, WA 98499
Phone: (253) 983-7852

Rev	Date	Drawn	Description	Ch'k'd	App'd
1	3/23/20	CNT	Final Design Submittal	EDE	

3/23/20

Project Number	B/O	Total
398289	13	15

Designed	E. Edgecomb		Eng check	E. Sheesley	
Drawn	C. Taylor		Coordination		
Dwg check	E. Sheesley		Approved	S. Phillips	
Scale at ANSI D: As Noted	Status		Rev	Security	
Drawing Number					

Title
Harry Todd Park
Waterfront Renovation

Pier Details 2

C:\pwworking\h\mm\ports_harbors\mcr69830\dms39316\396289 Design-site sections.dwg Mar 23, 2020 - 2:13PM MCR69830

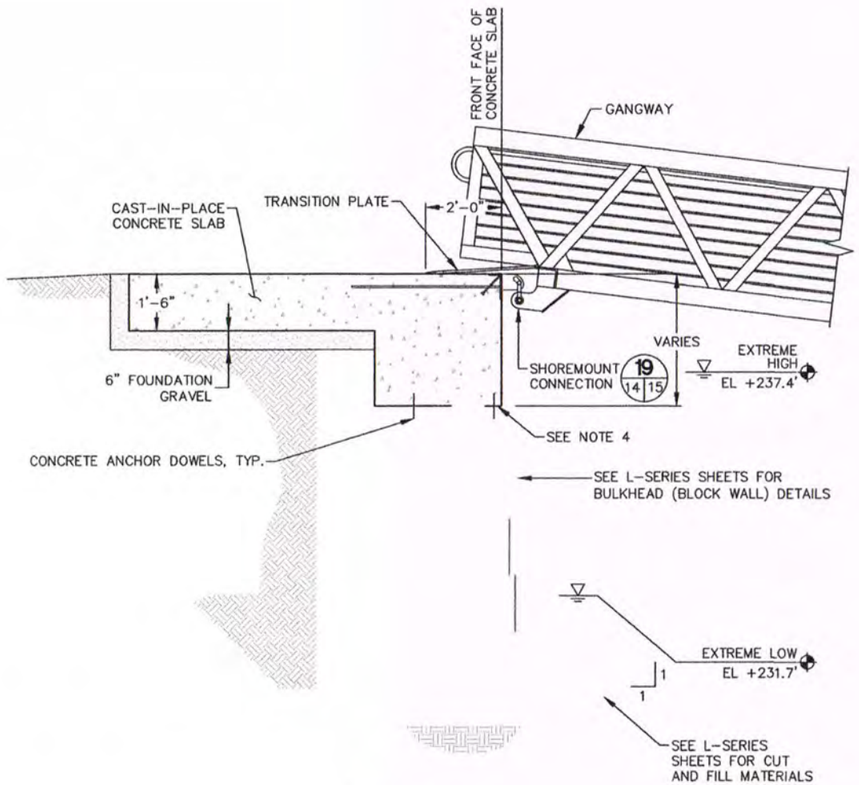

15 / 3 14 **DETAIL**
PRECAST BLOCK WALL WITH GANGWAY
0 2 4
SCALE IN FEET

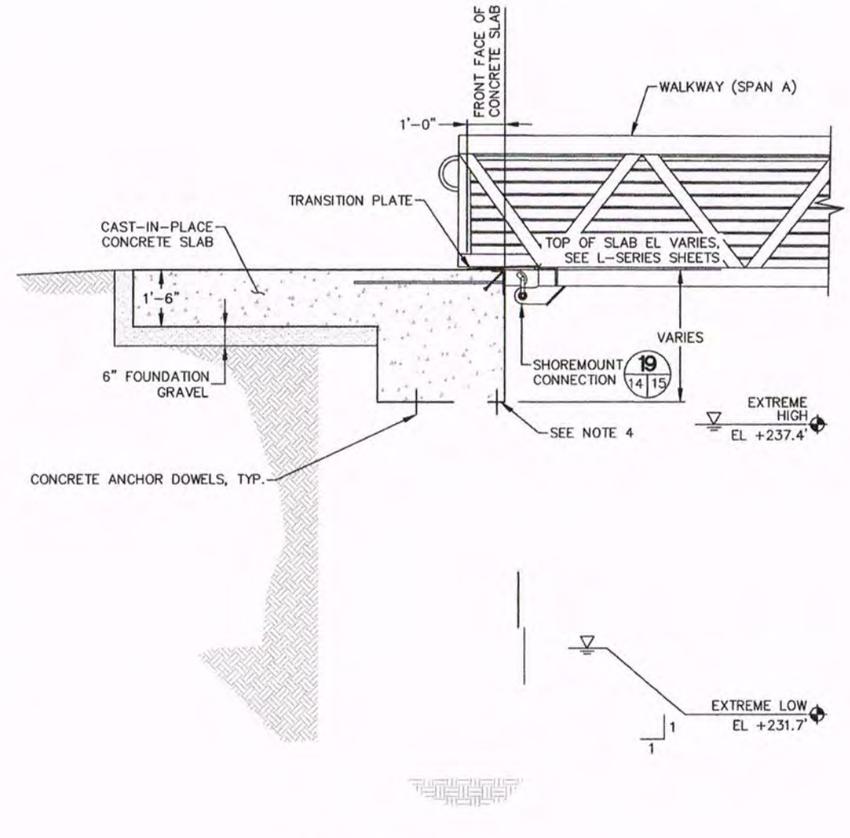

16 / 5 14 **DETAIL**
PRECAST BLOCK WALL WITH TRANSFER RAMP
0 2 4
SCALE IN FEET

NOTES

1. SEE L-SERIES SHEETS FOR ALIGNMENT AND DETAILS OF PRECAST BLOCK WALL CONSTRUCTION.
2. CONCRETE SLAB THICKNESS DIMENSIONS SHALL BE COORDINATED WITH L-SERIES SHEETS.
3. FOUNDATION GRAVEL UNDER SLAB SHALL BE COMPACTED TO 95% DENSITY.
4. PRECAST BLOCK UNDER CAST-IN-PLACE SLAB SHALL HAVE SHEAR KEY ON TOP OF BLOCK AS SHOWN.
5. TOP OF FRONT FACE OF CONCRETE SLAB SHALL MATCH UP WITH THE TOP OUTSIDE EDGE OF THE BLOCK WALL.

As-Built
7/2/21

MOTT MACDONALD
1601 5th Avenue
Suite 800
Seattle, Washington 98101
T +1 (425) 778 6243
F +1 (425) 778 6883
W mottmac.com

Client
City of Lakewood Parks & Recreation
Doug Fraser, Capital Project Coordinator
6000 Main Street SW
Lakewood, WA 98499
Phone: (253) 983-7652

Rev	Date	Drawn	Description	Ch'k'd	App'd
1	3/23/20	CNT	Final Design Submittal	EDE	

3/23/20

Project Number	B/O	Total
398289	14	15

Designed	E. Edgecomb		Eng check	E. Sheesley	
Drawn	C. Taylor		Coordination		
Dwg check	E. Sheesley		Approved	S. Phillips	
Scale at ANSI D: As Noted	Status		Rev		Security
Drawing Number					

Title
Harry Todd Park
Waterfront Renovation

Block Wall Details

C:\pwworking\mm\ports_harbors\mcl69830\dms39316\398289 Design site sections.dwg Mar 23, 2020 - 2:13PM MOR69830

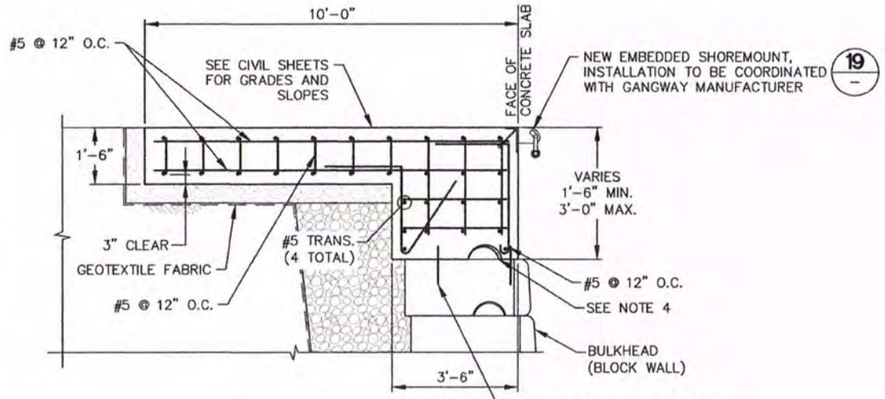

Q SECTION
CIP CONCRETE SLAB REINFORCEMENT
0 2 4
SCALE IN FEET

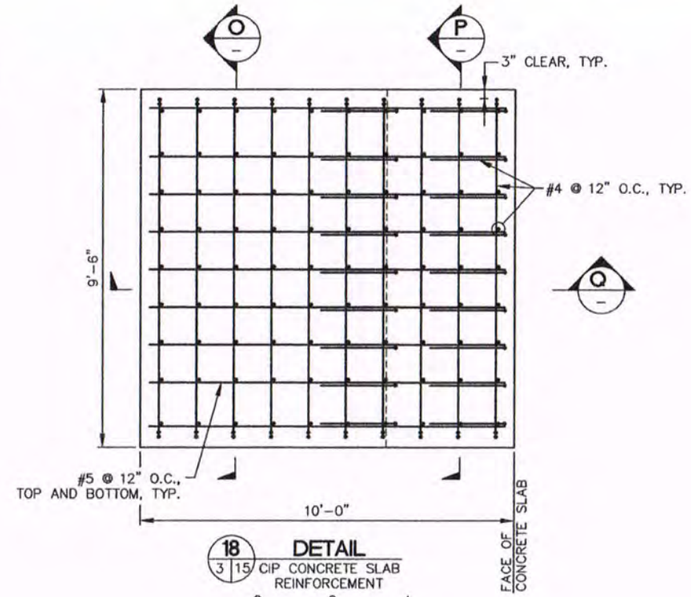

18 3 15 DETAIL
CIP CONCRETE SLAB REINFORCEMENT
0 2 4
SCALE IN FEET

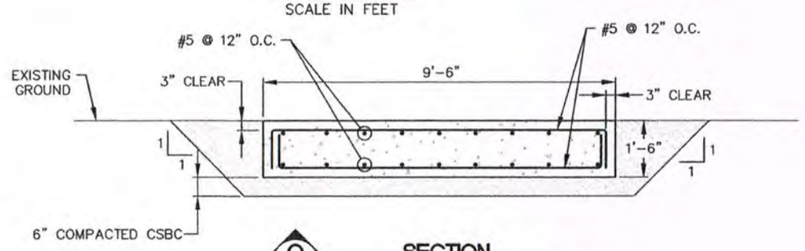

O SECTION
CIP CONCRETE SLAB REINFORCEMENT
0 2 4
SCALE IN FEET

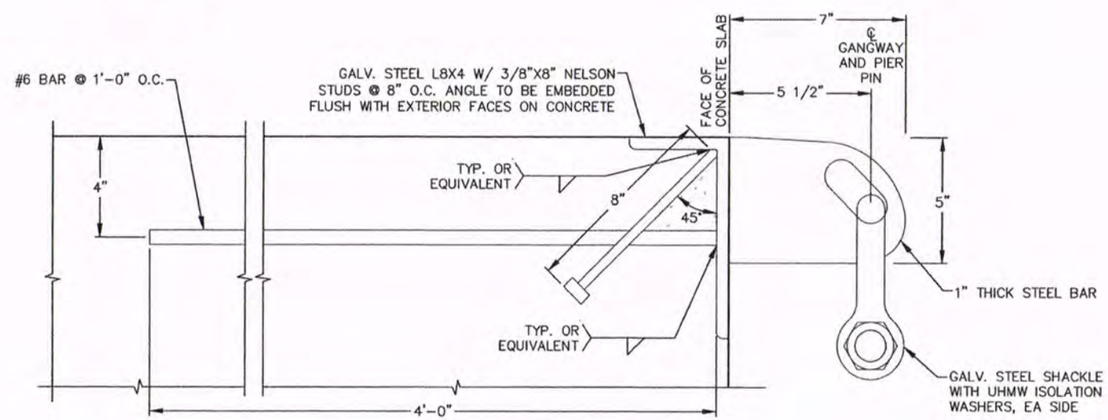

19 10,15 15 DETAIL
SHOREMOUNT CONNECTION
0 3 6
SCALE IN INCHES

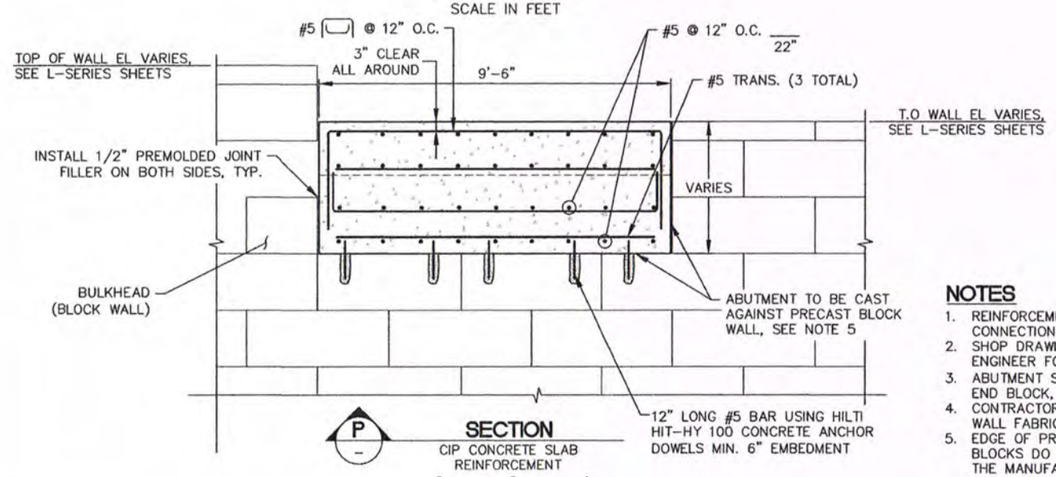

P SECTION
CIP CONCRETE SLAB REINFORCEMENT
0 2 4
SCALE IN FEET

NOTES

1. REINFORCEMENT SHALL BE INSTALLED TO AVOID CONFLICTS WITH EMBEDDED CONNECTION ASSEMBLIES.
2. SHOP DRAWINGS FOR CONCRETE REINFORCEMENT SHALL BE SUBMITTED TO THE ENGINEER FOR REVIEW AND APPROVED PRIOR TO REINFORCEMENT INSTALLATION.
3. ABUTMENT SLAB DOWEL SHALL BE LOCATED AT LEAST 6" FROM THE CONCRETE END BLOCK, CONTRACTOR TO FIELD VERIFY DOWEL LOCATION.
4. CONTRACTOR TO COORDINATE GEOMETRY AND LOCATION OF SHEAR KEY WITH WALL FABRICATOR.
5. EDGE OF PRECAST BLOCKS AND CAST-IN-PLACE SLAB SHALL BE STRAIGHT. IF BLOCKS DO NOT LINE UP, SPECIALLY CUT OR CUSTOM FABRICATE BLOCKS PER THE MANUFACTURERS RECOMMENDATIONS TO CREATE STRAIGHT LINE TO THE CAST-IN-PLACE.
6. SURFACE TREATMENT AND TEXTURE OF CONCRETE SLAB SHALL MATCH AND BE COORDINATED WITH OTHER CAST-IN-PLACE SLABS.

As-Built
7/2/21

MOTT MACDONALD
1601 5th Avenue
Suite 800
Seattle, Washington 98101
T +1 (425) 778 6243
F +1 (425) 778 6883
W mottmac.com

Client
City of Lakewood Parks & Recreation
Doug Fraser, Capital Project Coordinator
6000 Main Street SW
Lakewood, WA 98499
Phone: (253) 983-7852

Rev	Date	Drawn	Description	Ch'k'd	App'd
1	3/23/20	CNT	Final Design Submittal	EDE	

3/23/20

Project Number	B/O	Total
398289	15	15

Designed	E. Edgecomb		Eng check	E. Sheesley	
Drawn	C. Taylor		Coordination		
Dwg check	E. Sheesley		Approved	S. Phillips	
Scale at ANSI D: As Noted	Status		Rev		Security
Drawing Number					

Title
Harry Todd Park
Waterfront Renovation

Block Wall And Abutment Details

C:\pwworking\mmmports_fabtons\mcr69830\dma39316398289 Design-site sections.dwg Mar 23, 2020 - 2:13PM MCR69830

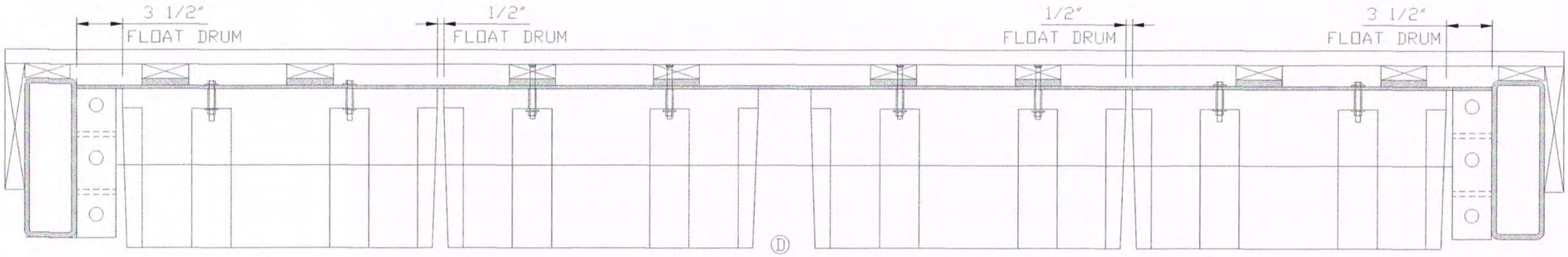

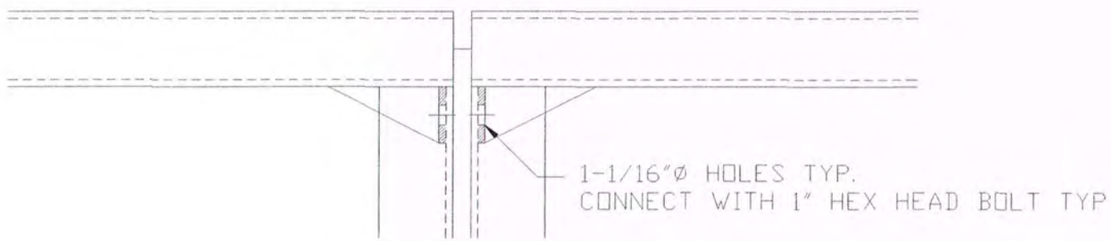

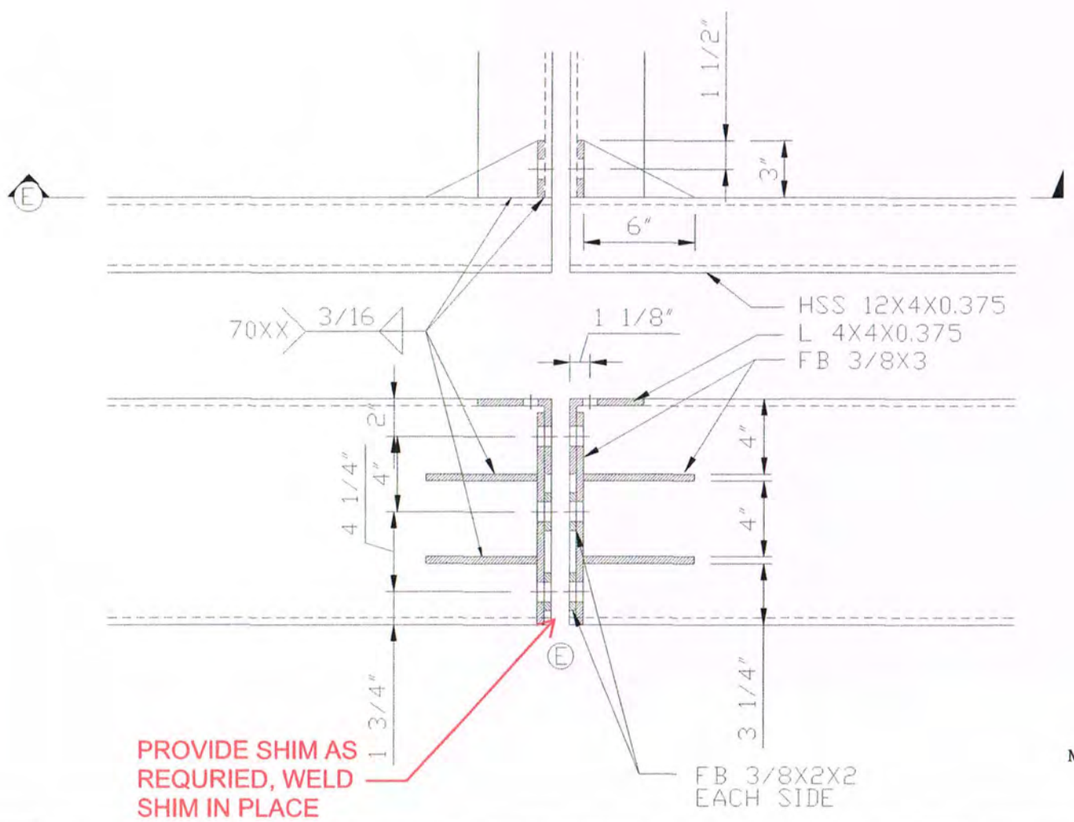

As-Built
7/2/21

PROPRIETARY PROPERTY
MARINE FLOATS CORPORATION
This document is the proprietary property of
Marine Floats Corporation and shall not be used in part or whole
for any other project without
THE WRITTEN PERMISSION OF MARINE FLOATS
CORPORATION

Marine Floats
1208 East D St - Tacoma - WA 98421 - 253-383-2740

SCALE: 1-1/2"=1'-0"	APPROVED BY:	DRAWN BY	
DATE: 6/19/20		REVISION # 3 10/12/20	
FLOAT SPLICE			
HARRY TODD PARK		DRAWING NUMBER PG 6.0	

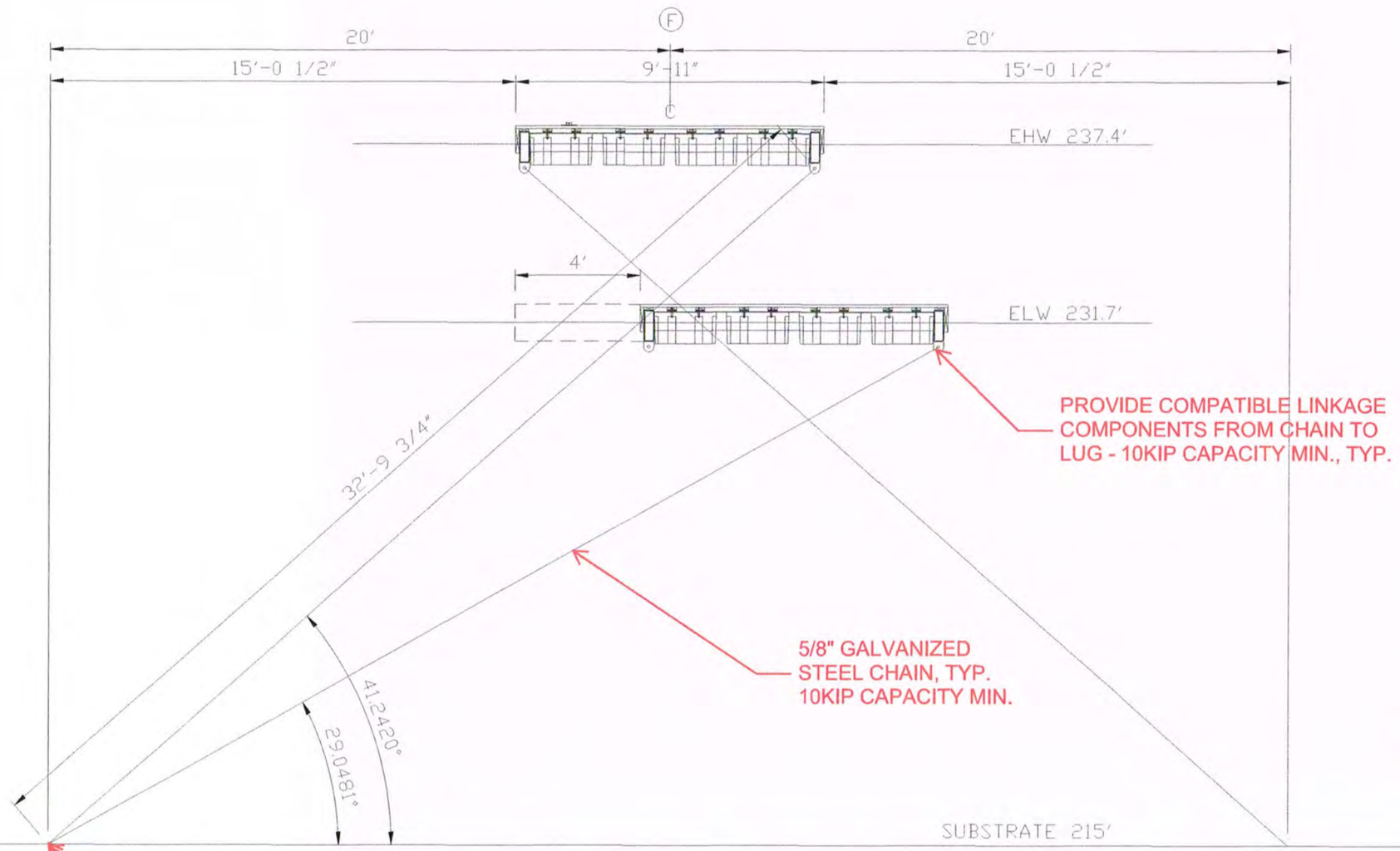

As-Built
7/2/21

ANCHOR PILE SHALL BE 16" DIAMETER X 1/2" WALL THICKNESS STEEL PIPE PILE - EMBED 20FT MIN. PROVIDE 3/4" CAP PLATE WITH 1/4" MIN FILLET WELD ALL AROUND. PROVIDE LUG MATCHING LUG SHOWN ON SHEET PG2.0 - ATTACH TO CAP PLATE WITH 1/4" MIN. FILLET WELD ALL AROUND.

PROPRIETARY PROPERTY
MARINE FLOATS CORPORATION
This document is the proprietary property of Marine Floats Corporation and shall not be used in part or whole for any other project without THE WRITTEN PERMISSION OF MARINE FLOATS CORPORATION

Marine Floats
1208 East D St - Tacoma - WA 98421 - 253-383-2740

SCALE: 1/4"=1'-0"	APPROVED BY:	DRAWN BY	
DATE: 9/4/20		REVISION #	
PROPOSED ANCHOR REVISION SECTION			
HARRY TODD PARK		DRAWING NUMBER PG 9.2	

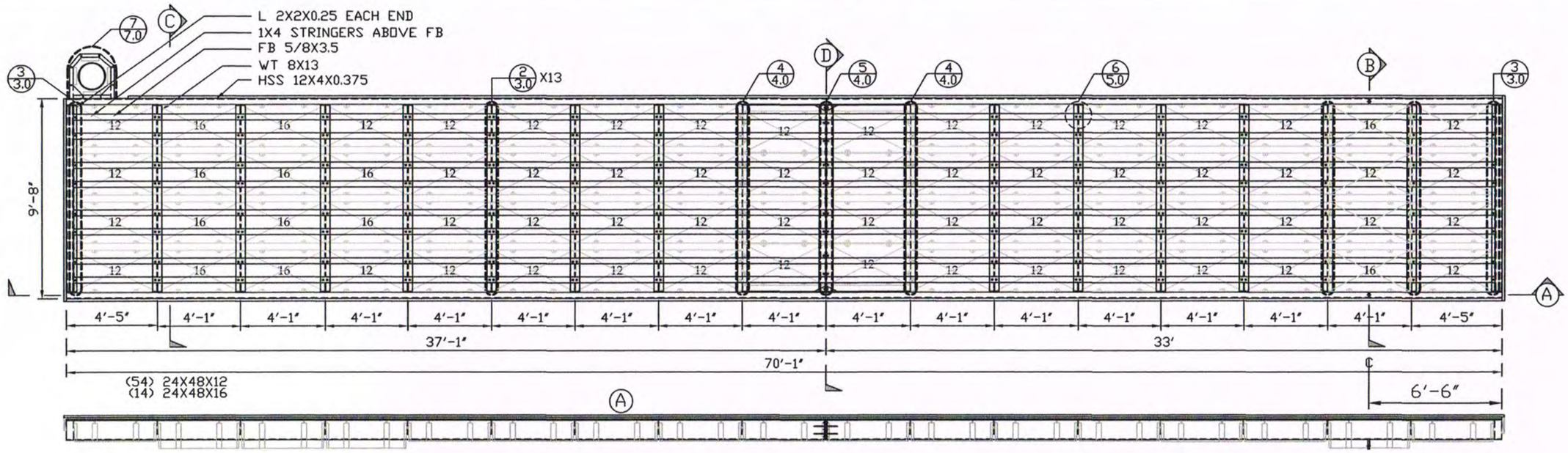

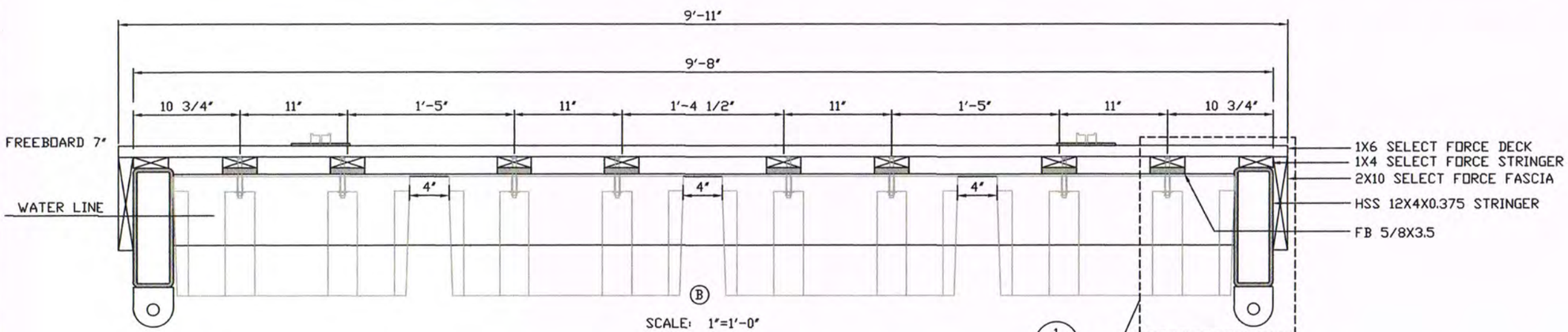

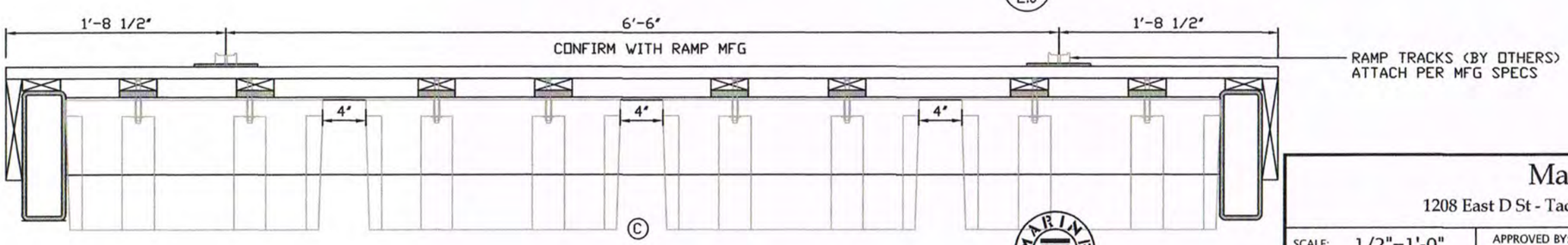

As-Built
7/2/21

PROPRIETARY PROPERTY
MARINE FLOATS CORPORATION
This document is the proprietary property of Marine Floats Corporation and shall not be used in part or whole for any other project without THE WRITTEN PERMISSION OF MARINE FLOATS CORPORATION

Marine Floats
1208 East D St - Tacoma - WA 98421 - 253-383-2740

SCALE: 1/2"=1'-0"	APPROVED BY:	DRAWN BY
DATE: 6/19/20		REVISION # 3 10/12/20

FLOAT FRAMING AND TUB LAYOUT

HARRY TODD PARK

DRAWING NUMBER
PG. 1.0

ALL HARDWARE 316 STAINLESS STEEL UNLESS NOTED

ALL STEEL FRAMING HDG UNLESS NOTED

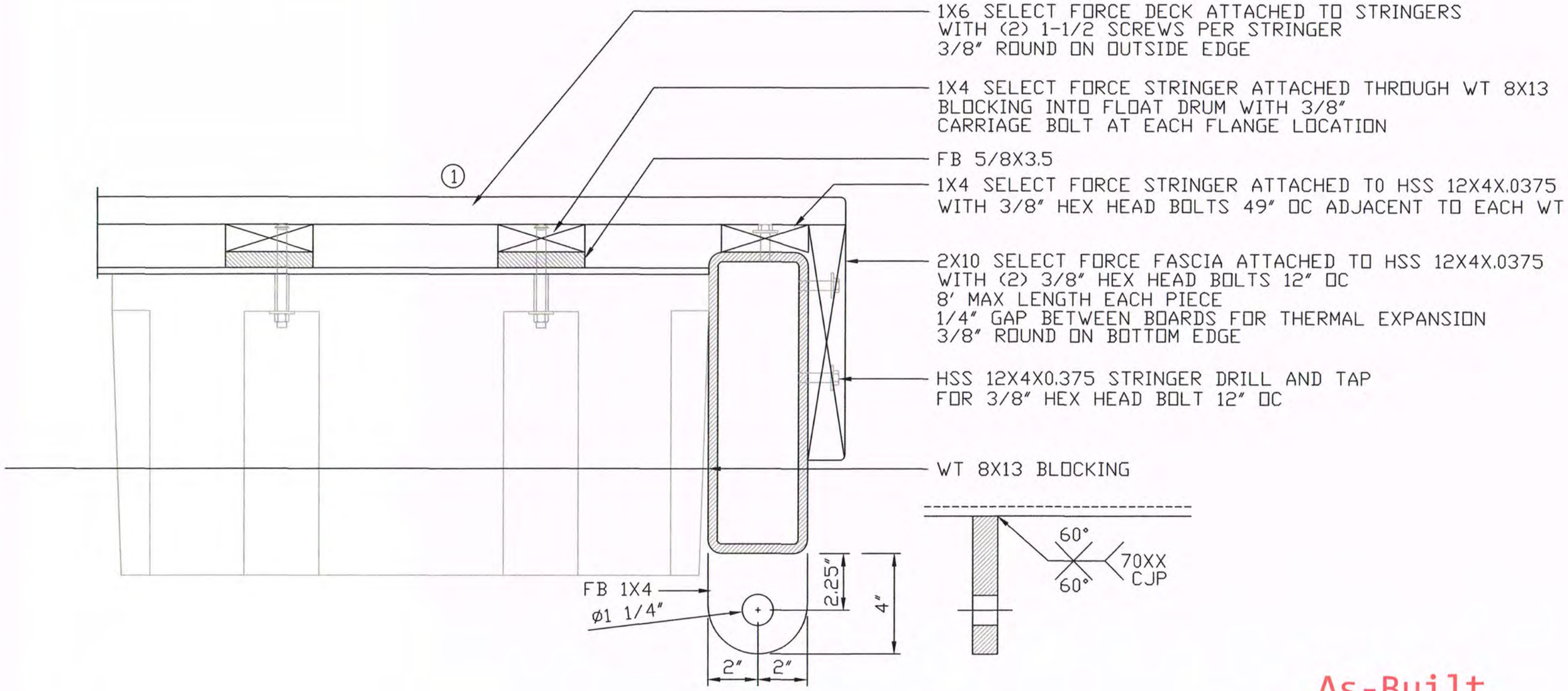

As-Built
7/2/21

PROPRIETARY PROPERTY
MARINE FLOATS CORPORATION
This document is the proprietary property of
Marine Floats Corporation and shall not be used in part or whole
for any other project without
THE WRITTEN PERMISSION OF MARINE FLOATS
CORPORATION

Marine Floats
1208 East D St - Tacoma - WA 98421 - 253-383-2740

SCALE: 1"=1'-0"	APPROVED BY:	DRAWN BY
DATE: 6/19/20		REVISION # 3 10/12/20

SECTION DETAIL

HARRY TODD PARK

DRAWING NUMBER
PG. 2.0

② WT 8X13
MAKE (13)

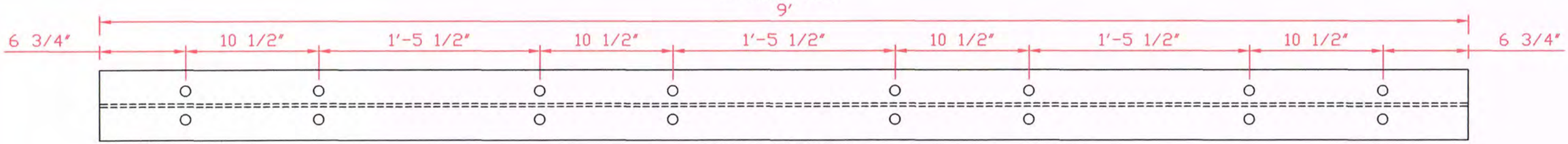

13/16"Ø HOLES TYP.

③ L2X2X1/4
MAKE (2)

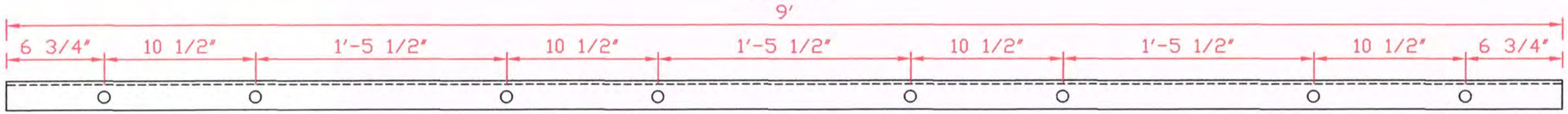

13/16"Ø HOLES TYP.

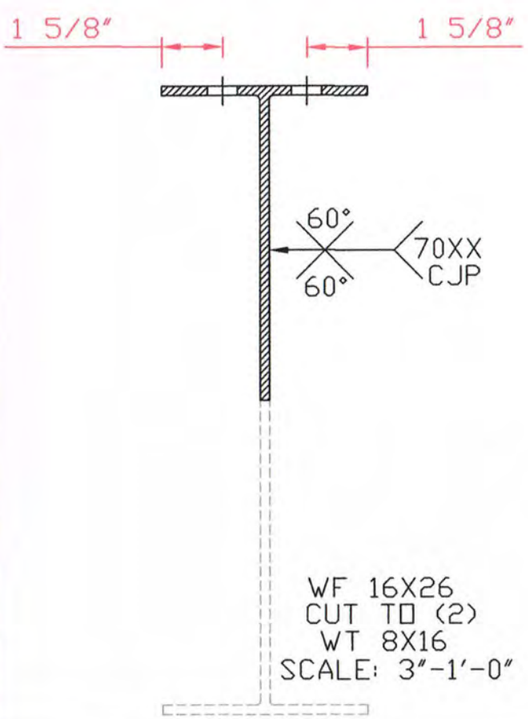

WF 16X26
CUT TO (2)
WT 8X16
SCALE: 3"-1'-0"

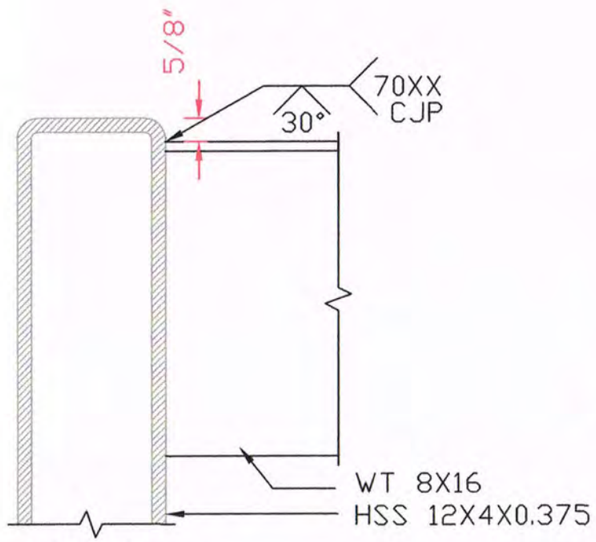

L2X2X1/4
SCALE: 3"=1'-0"

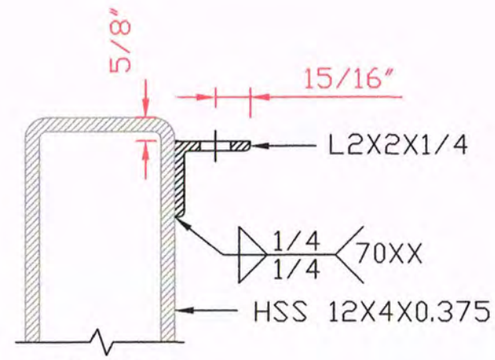

L2X2X1/4
SCALE: 3"=1'-0"

As-Built
7/2/21

PROPRIETARY PROPERTY
MARINE FLOATS CORPORATION
This document is the proprietary property of
Marine Floats Corporation and shall not be used in part or whole
for any other project without
THE WRITTEN PERMISSION OF MARINE FLOATS
CORPORATION

Marine Floats
1208 East D St - Tacoma - WA 98421 - 253-383-2740

SCALE: 1-1/2"=1'-0"	APPROVED BY:	DRAWN BY
DATE: 6/19/20		REVISION # 3 10/12/20

WT & ANGLE LAYOUT

HARRY TODD PARK

DRAWING NUMBER
PC 3.0

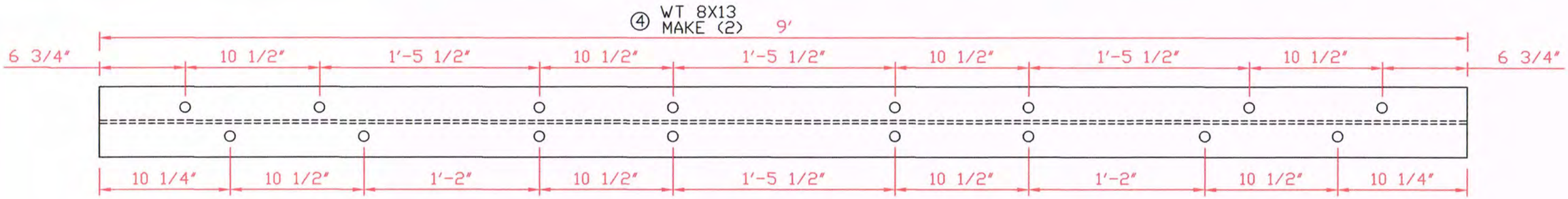

13/16"Ø HOLES TYP.

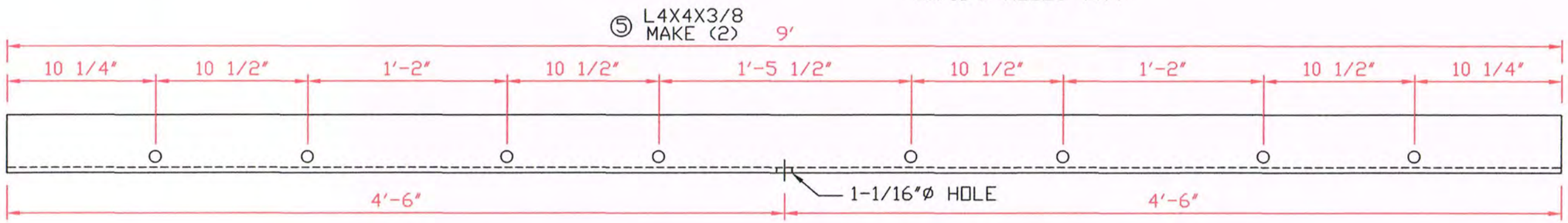

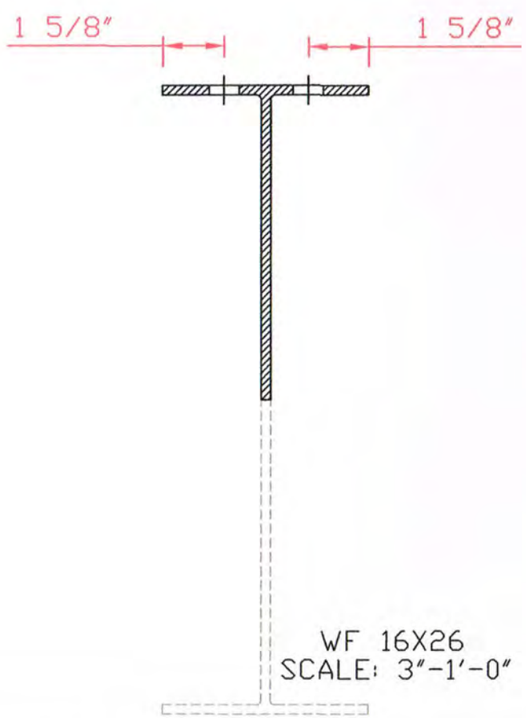

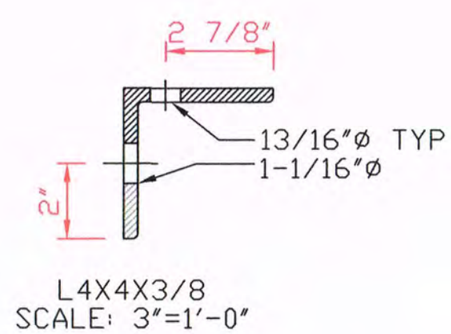

As-Built
7/2/21

PROPRIETARY PROPERTY
MARINE FLOATS CORPORATION
This document is the proprietary property of
Marine Floats Corporation and shall not be used in part or whole
for any other project without
THE WRITTEN PERMISSION OF MARINE FLOATS
CORPORATION

Marine Floats 1208 East D St - Tacoma - WA 98421 - 253-383-2740		
SCALE: 1-1/2"=1'-0"	APPROVED BY:	DRAWN BY
DATE: 6/19/20		REVISION # 3 10/12/20
WT & ANGEL LAYOUT		
HARRY TODD PARK		DRAWING NUMBER PG. 4.0

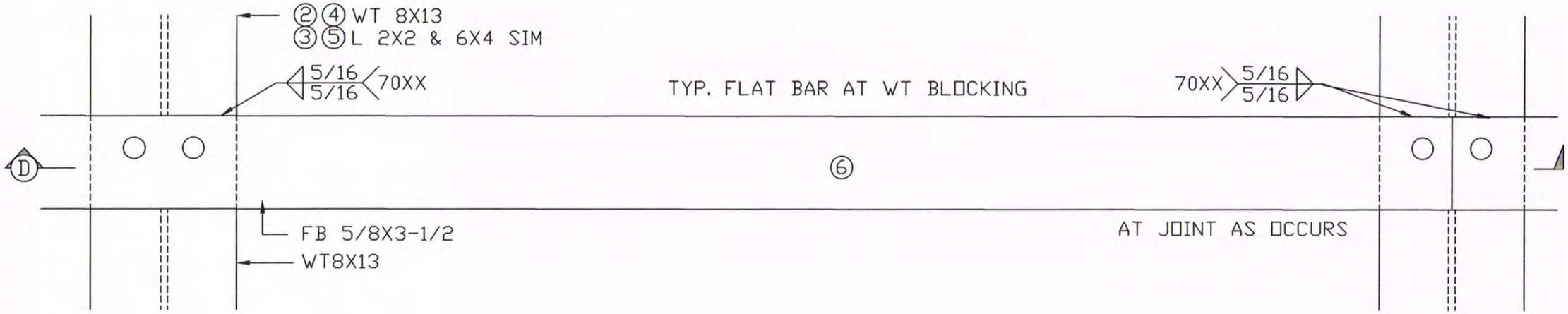

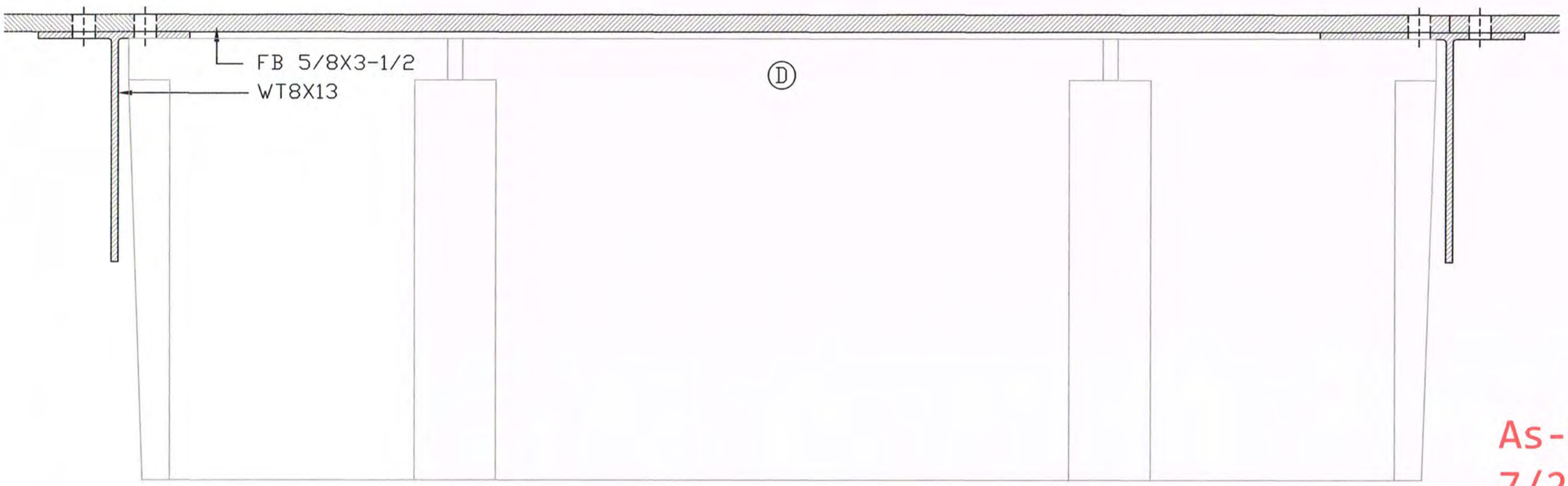

As-Built
7/2/21

PROPRIETARY PROPERTY
MARINE FLOATS CORPORATION
This document is the proprietary property of
Marine Floats Corporation and shall not be used in part or whole
for any other project without
THE WRITTEN PERMISSION OF MARINE FLOATS
CORPORATION

Marine Floats 1208 East D St - Tacoma - WA 98421 - 253-383-2740		
SCALE: 3"=1'-0"	APPROVED BY:	DRAWN BY
DATE: 6/19/20		REVISION # 3 10/12/20
FLAT BAR CONNECTION		
HARRY TODD PARK		DRAWING NUMBER PG. 5.0

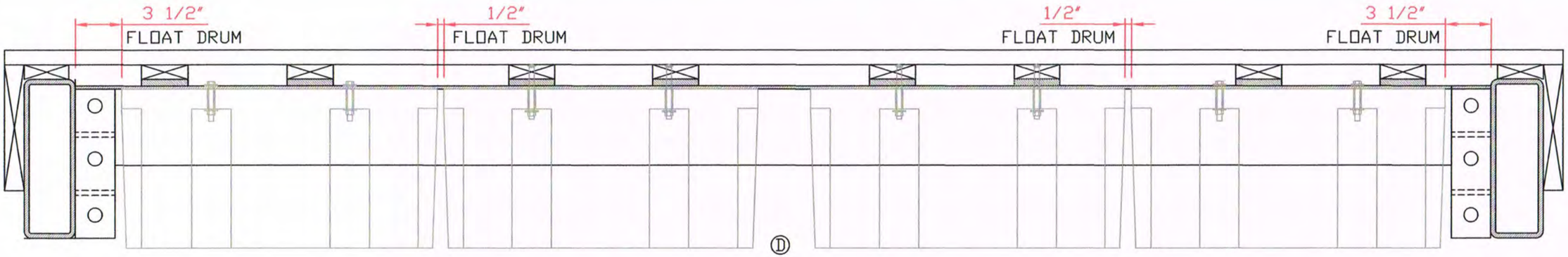

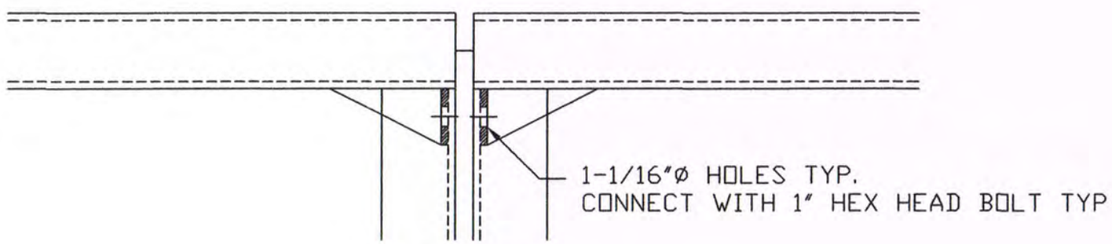

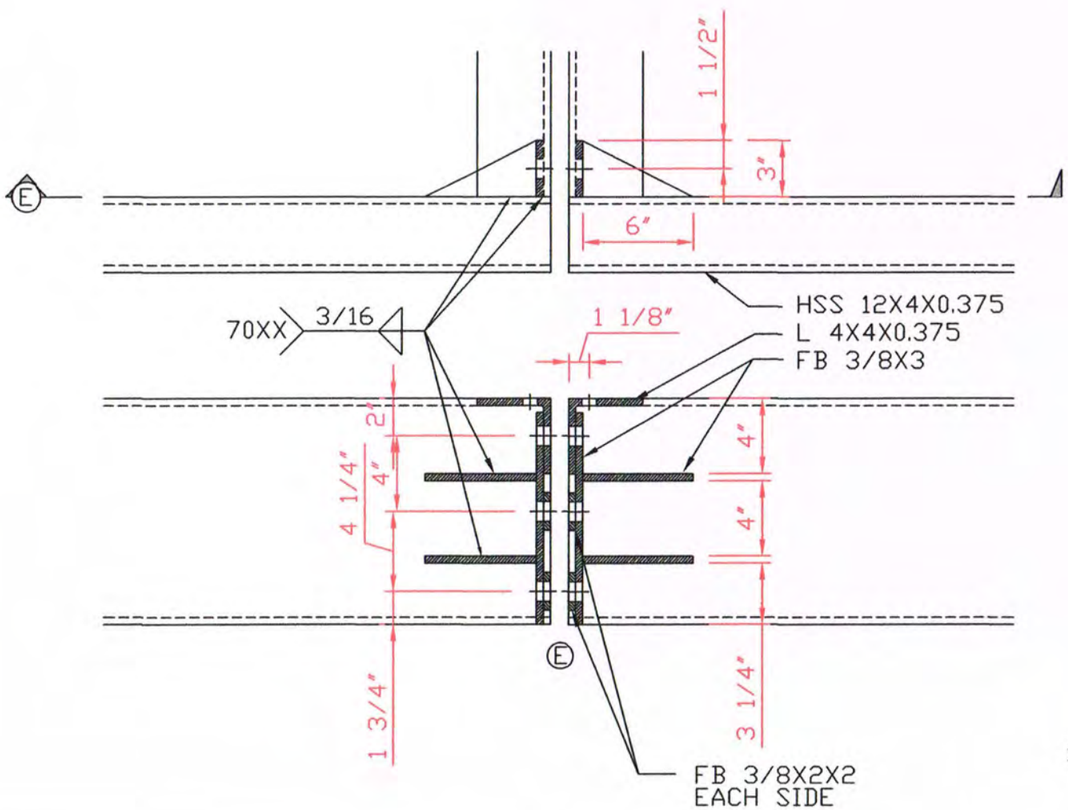

As-Built
7/2/21

PROPRIETARY PROPERTY
MARINE FLOATS CORPORATION
This document is the proprietary property of
Marine Floats Corporation and shall not be used in part or whole
for any other project without
THE WRITTEN PERMISSION OF MARINE FLOATS
CORPORATION

Marine Floats
1208 East D St - Tacoma - WA 98421 - 253-383-2740

SCALE: 1-1/2"=1'-0"	APPROVED BY:	DRAWN BY
DATE: 6/19/20		REVISION # 3 10/12/20
FLOAT SPLICE		
HARRY TODD PARK		DRAWING NUMBER

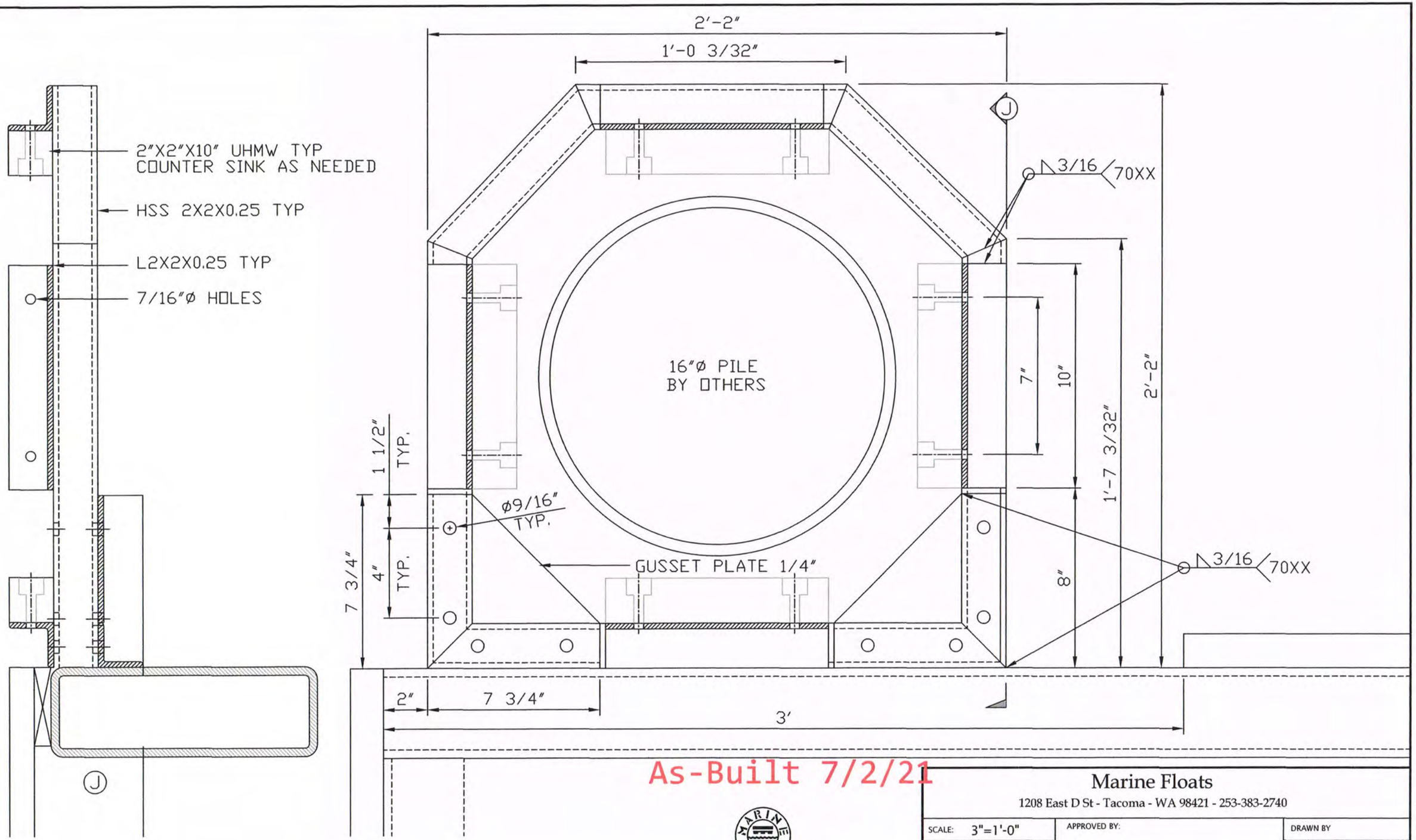

As-Built 7/2/21

PROPRIETARY PROPERTY
MARINE FLOATS CORPORATION
This document is the proprietary property of
Marine Floats Corporation and shall not be used in part or whole
for any other project without
THE WRITTEN PERMISSION OF MARINE FLOATS
CORPORATION

Marine Floats
1208 East D St - Tacoma - WA 98421 - 253-383-2740

SCALE: 3"=1'-0"	APPROVED BY:	DRAWN BY
DATE: 6/19/20		REVISION #
PILE HOOP		
HARRY TODD PARK		DRAWING NUMBER

BASE FLOTATION CALCULATION

FLOTATION CALCULATION

Float Siz 9.91 X 70.33

Dead Load	lbs	lbs/sf
Frame	11667	16.7
Decking	5051	7.2
Tub	2108	3.0
Total Weight	18827	27.0

Flotation

#	Width	Length	Depth		
0	24	48	8		
68	24	48	12	29444	42.2
0	24	48	16		
0	0	0	0		

Buoyancy	29444	42.2

Dead Load Freeboard Calc

Avg Flotation De	12
Dead Load/Buoya	0.64
Used Tub Depth	7.67
Deck Thickness	1.1
Framing Thicknes	2
Unused Tub Dept	4.33
Total Freeboard	7.43

DL+LL Freeboard Calc

LL= 16.7 PSF

Avg Flotation De	12
DL+LL/Buoyancy	0.96
Used Tub Depth	11.56
Deck Thickness	1.1
Framing Thicknes	2
Unused Tub Dept	0.44
Total Freeboard	3.54

DEAD LOAD COMPENSATED FLOTATION CALCULATION

FLOTATION CALCULATION

Float Siz 9.91 X 70.33

Dead Load	lbs	lbs/sf
Frame	11667	16.7
Decking	5051	7.2
DL Ramp	1300	1.9
Anchor Chain	606	0.9
Pile Hoop	68	0.1
Tub	2192	3.1
Total Weight	20885	30.0

Flotation

#	Width	Length	Depth		
54	24	48	12	23382	33.5
14	24	48	16	8134	11.7
0	24	48	24		
0	0	0	0		

Buoyancy	31516	45.2

Dead Load Freeboard Calc

Avg Flotation De	12.82353
Dead Load/Buoya	0.66
Used Tub Depth	8.50
Deck Thickness	1.1
Framing Thicknes	2
Unused Tub Dept	4.33
Total Freeboard	7.43

DL+LL Freeboard Calc

LL= 19.3 PSF

Avg Flotation De	12.82353
DL+LL/Buoyancy	1.00
Used Tub Depth	12.80
Deck Thickness	1.1
Framing Thicknes	2
Unused Tub Dept	0.02
Total Freeboard	3.12

As-Built
7/2/21

PROPRIETARY PROPERTY
MARINE FLOATS CORPORATION
This document is the proprietary property of
Marine Floats Corporation and shall not be used in part or whole
for any other project without
THE WRITTEN PERMISSION OF MARINE FLOATS
CORPORATION

Marine Floats
1208 East D St - Tacoma - WA 98421 - 253-383-2740

SCALE:	APPROVED BY:	DRAWN BY
DATE: 9/4/20		REVISION # 3 10/12/20

LOADING AND FREEBOARD CALCULATIONS

HARRY TODD PARK

DRAWING NUMBER
BC-8.0

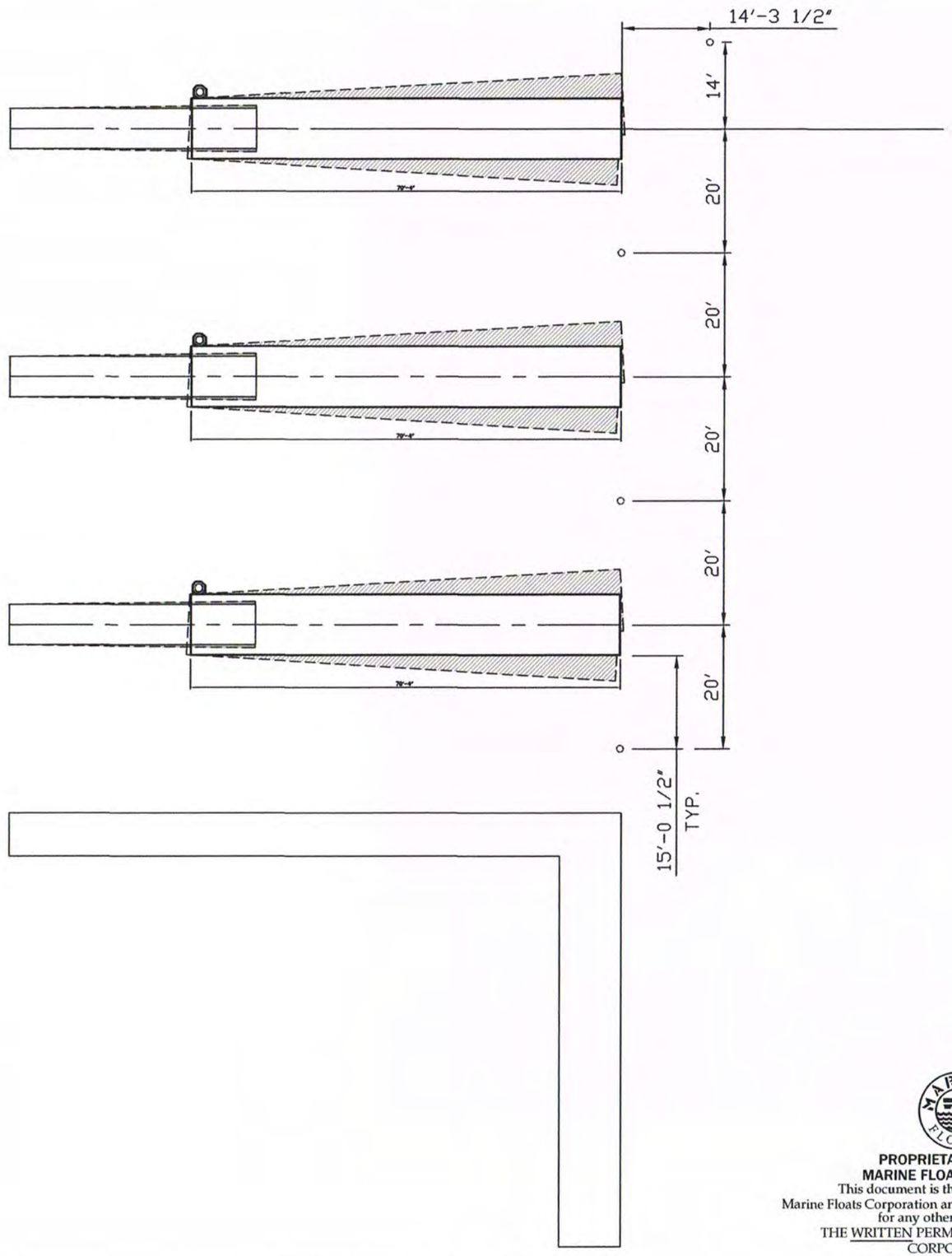

As-Built
7/2/21

PROPRIETARY PROPERTY
MARINE FLOATS CORPORATION
This document is the proprietary property of
Marine Floats Corporation and shall not be used in part or whole
for any other project without
THE WRITTEN PERMISSION OF MARINE FLOATS
CORPORATION

Marine Floats
1208 East D St - Tacoma - WA 98421 - 253-383-2740

SCALE: 1"=20'	APPROVED BY:	DRAWN BY
DATE: 10/12/20		REVISION #

PROPOSED ANCHOR REVISION
FLOAT AND PIER PLAN

HARRY TODD PARK

DRAWING NUMBER
PC-9.0

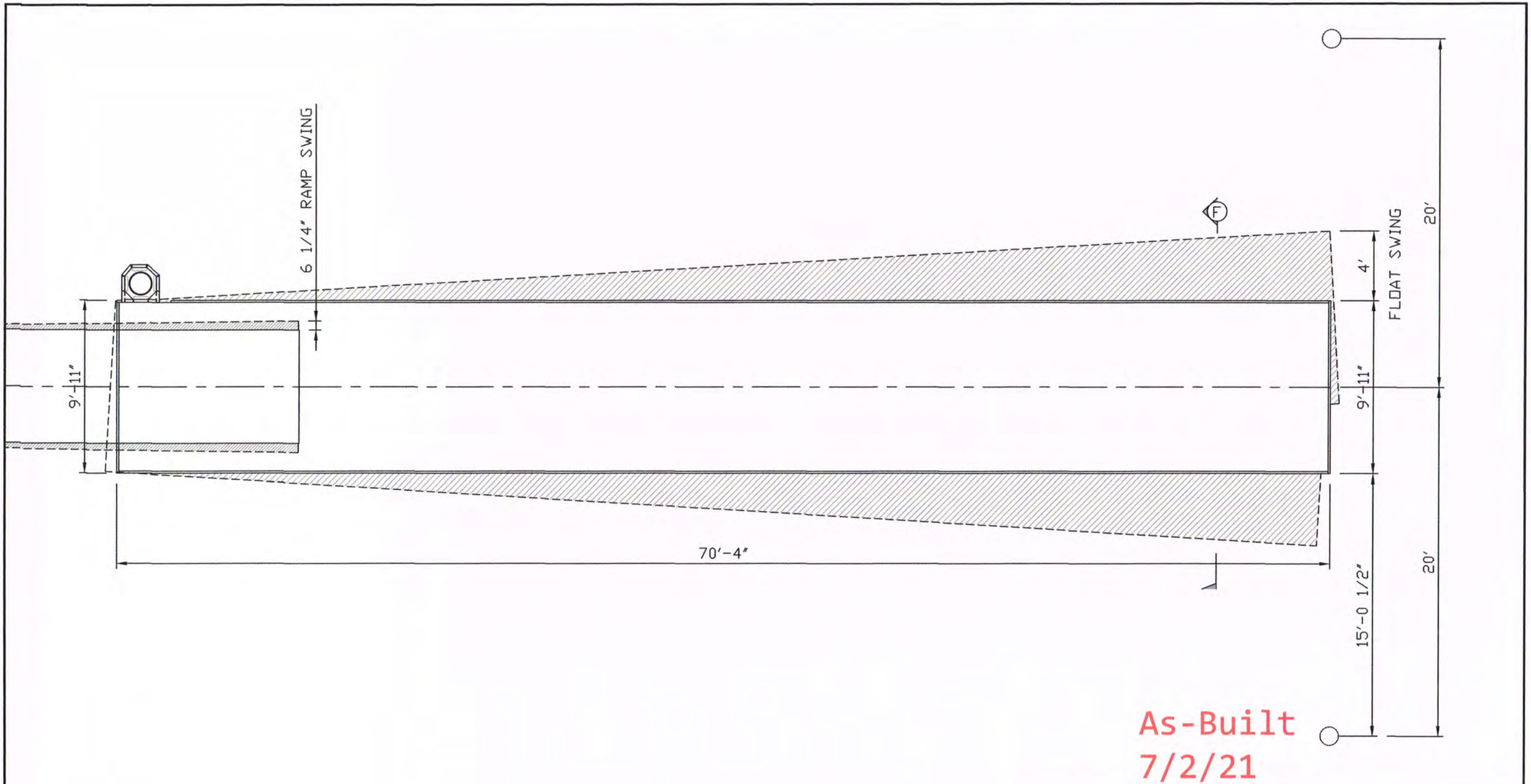

PROPRIETARY PROPERTY
MARINE FLOATS CORPORATION
This document is the proprietary property of
Marine Floats Corporation and shall not be used in part or whole
for any other project without
THE WRITTEN PERMISSION OF MARINE FLOATS
CORPORATION

Marine Floats
1208 East D St - Tacoma - WA 98421 - 253-383-2740

SCALE:	3/16"=1'-0"	APPROVED BY:	DRAWN BY
DATE:	10/12/20		REVISION #

PROPOSED ANCHOR REVISION
SINGLE FLOAT PLAN

HARRY TODD PARK

DRAWING NUMBER
PG. 9.1

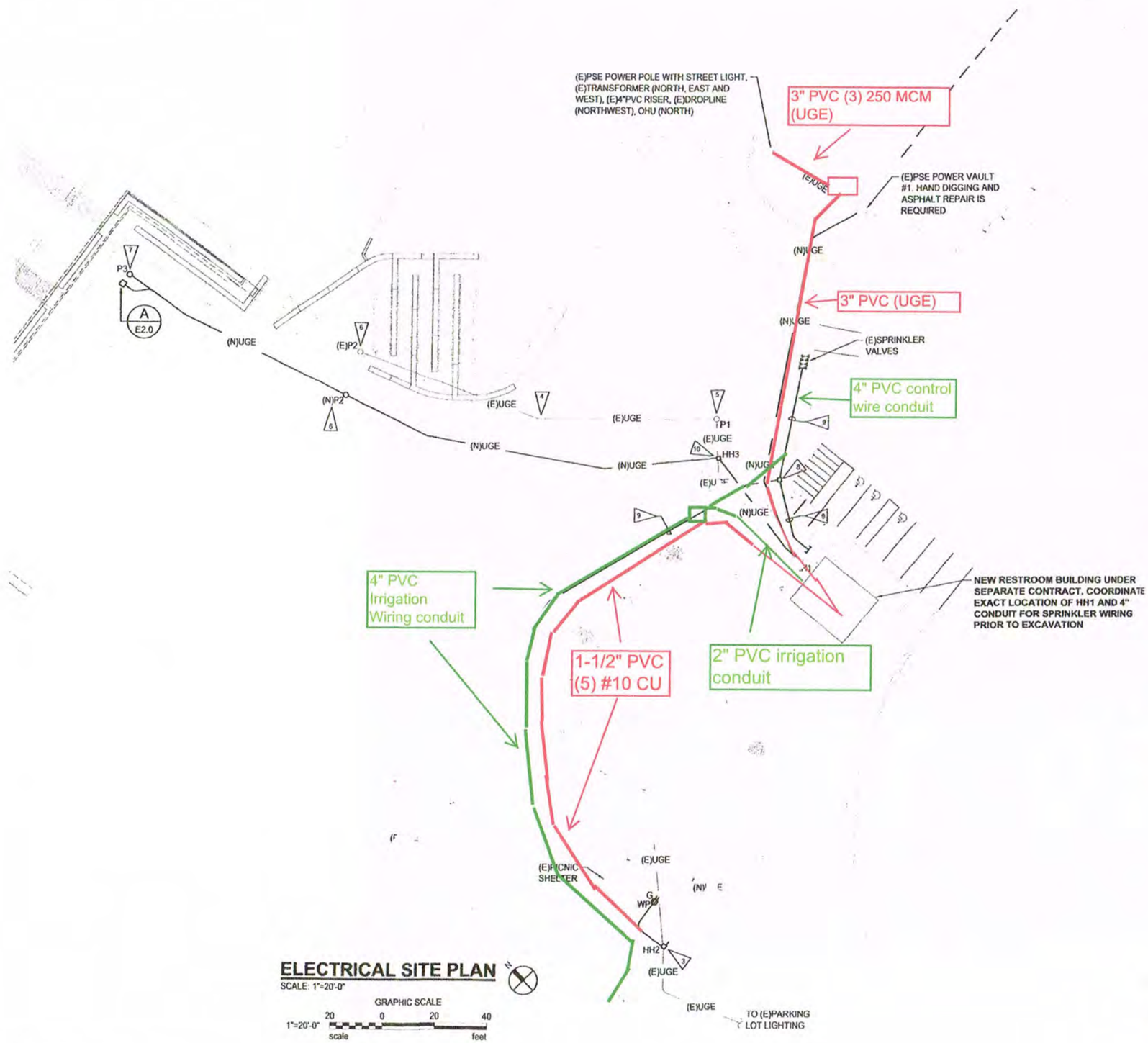

ELECTRICAL SITE PLAN

SCALE: 1"=20'-0"

GRAPHIC SCALE 1"=20'-0" 20 0 20 40 scale feet

ELECTRICAL NOTES:

1. EXISTING PSE SERVICE POLE CONTINUES APPROXIMATELY 150'-0" PAST FENCE LINE. CONTRACTOR SHALL REMOVE POLE RISER CONDUIT (CAP AND ABANDON 6'-0" AFG) AND SERVICE WIRE TO DEMOLISHED RESTROOM/CONCESSIONS BUILDING. COORDINATE WORK WITH PSE AND HAVE METER RECLAIMED. ABANDON EXISTING UNDERGROUND CONDUIT 5'-0" PAST RESTROOM/CONCESSIONS BUILDING DEMOLITION FOOTPRINT.
2. EXISTING UNDERGROUND WIRING TO BE REMOVED FROM EXISTING RESTROOM/CONCESSIONS BUILDING AND TO NEW HH1 AND HH2. ABANDON EXISTING UNDERGROUND CONDUIT 5'-0" PAST RESTROOM/CONCESSIONS BUILDING DEMOLITION FOOTPRINT.
3. CONTRACTOR SHALL LOCATE AND INTERCEPT EXISTING UNDERGROUND ELECTRICAL CONDUIT/WIRE TO PARKING LOT LIGHTING. INSTALL NEW HANDHOLE AND MAKE WATERTIGHT SPLICES IN VAULT. SAW CUT EXISTING PICNIC SHELTER CONCRETE SLAB, REMOVE AND PATCH CONCRETE INSTALL NEW 20A, 125V, GFI, RECEPTACLE IN CAST BOX AT PICNIC SHELTER ON EXISTING POST AT 18" AFF.
4. CONTRACTOR SHALL LOCATE AND INTERCEPT EXISTING UNDERGROUND ELECTRICAL CONDUIT/WIRE , REMOVE EXISTING WIRING AND REMOVE CONDUIT FOR NEW RAMP WORK. OTHER ARES CONDUIT MAY BE ABANDONED.
5. EXISTING 5" SQUARE STEEL LIGHT POLE WITH BASE COVER AND LIGHT FIXTURE. CONTRACTOR SHALL REMOVE EXISTING POLE AND BASE COVER. SAND BLAST AND POWDER COAT PAINT POLE TO MATCH NEW LIGHT FIXTURE. MOUNT NEW LIGHT FIXTURE TO EXISTING POLE. PROVIDE NEW MOUNTING PLATE WELDED TO POLE IF REQUIRED. PROVIDE NEW BASE NUTS, WASHERS AND CLEAN EXPOSED CONCRETE BASE AND SACK FINISH.
6. REMOVE EXISTING LIGHT FIXTURE, CONCRETE BASE AND LEGALLY DISPOSE OF. REMOVE EXISTING 5" SQUARE STEEL POLE WITH BASE COVER, SAND BLAST AND POWDER COAT PAINT POLE TO MATCH NEW LIGHT FIXTURE. PROVIDE NEW CONCRETE POLE BASE, NEW LIGHT FIXTURE AND INSTALL ALL ON OPPOSITE SIDE OF WALKWAY.
7. PROVIDE NEW CONCRETE LIGHT POLE BASE, POLE AND LIGHT FIXTURE.
8. PROVIDE J-11A FOGTITE (OR EQUAL) HANDHOLE FOR SPRINKLER SYSTEM CONTROL WIRING.
9. PROVIDE 4"C.O. WITH PULLSTRING FOR IRRIGATION CONTROL WIRING. COORDINATE ROUTING AND TERMINATION LOCATIONS WITH SPRINKLER CONTRACTOR PRIOR TO STARTING WORK.
10. INTERCEPT EXISTING CONDUIT TO EXISTING POLE BASE P1. RETAIN CONDUIT UNDER EXISTING WALK PATH AND PROVIDE NEW WIRE TO P1.

Irrigation control conduit

Electrical conduit

As-Built
7/2/21

IF SHEET IS LESS THAN 22" x 34" IT IS A REDUCED SET

BID SET

CROSS ENGINEERS, INC
923 MLK Jr Way
Tacoma, WA 98405
info@crossengineers.com
Phone: (253) 759-9118
Job Number 18-104

Call 811 two business days before you dig

Harry Todd Park Waterfront Renovation

Lakewood Parks & Recreation Department
Lakewood, WA

Robert W. Droll
Landscape Architects, PS
4405 7th Avenue SE, Ste. 201
Lacey, WA 98503
(360) 456-3813
FAX (360) 493-2653
E-MAIL rwd@rwdroll.com
Landscape Architecture
Site Planning
Environmental Design
Urban Design
Land Planning
Project Management

STEVEN L. HUBBARD, STATE OF WASHINGTON, 002908, REGISTERED PROFESSIONAL ENGINEER
3/18/20

PROJECT NO. 18021
DRAWING
DESIGNED BY GLW
DRAWN BY JAE
CHECKED BY SLH

REVISION

DATE	CHANGE

DATE: MARCH 24, 2020

ELECTRICAL SITE PLAN

E1.0

Sheet ___ of ___

Existing System Connection Notes

1. THE LOCATIONS OF ALL EXISTING IRRIGATION SPRINKLER HEADS AND PIPING SHOWN HEREON WAS OBTAINED FROM FIELD OBSERVATIONS, AND OWNER-PROVIDED AS-BUILT PLANS AND SHALL BE CONSIDERED APPROXIMATE. ACTUAL LOCATIONS WILL VARY IN THE FIELD. CONTRACTOR SHALL LOCATE HEADS TO PROVIDE THE MOST CONSISTENT SPACING AND PRECIPITATION RATES POSSIBLE, TAKING INTO ACCOUNT BOTH HEADS SHOWN ON PLAN, AND HEADS NOT SHOWN ON PLAN.
2. CONFIRM ACTUAL LOCATIONS AND ADJUST PIPING, HEADS, AND EQUIPMENT. NOTIFY OWNER IF DISCREPANCIES EXIST.
3. EXISTING MAINLINE SHOWN IS ASSUMED. POTHOLE TO LOCATE.
4. CONNECT ALL NEW WORK TO EXISTING MAINLINE AT OR NEAR POINT SHOWN ON PLANS.
5. INSTALL NEW CONTROL VALVE WIRES IN THE MAINLINE TRENCH TO THE CONTROL VALVES TO BE REPLACED.
6. EXISTING SALVAGED IRRIGATION CONTROLLER SHALL BE REINSTALLED IN THE CHASE OF THE RESTROOM BUILDING. CONTRACTOR SHALL MAKE ALL CONNECTIONS AS REQUIRED BETWEEN ZONE CONTROL VALVES AND IRRIGATION CONTROLLER TO PROVIDE A FULLY OPERABLE AUTOMATIC IRRIGATION SYSTEM.
7. CONTRACTOR SHALL TAKE ALL NECESSARY PRECAUTIONS TO PROTECT ROOT ZONES OF EXISTING TREES DURING ALL PREPARATION AND INSTALLATION WORK.
8. VERIFY NEW SLEEVE LOCATIONS W/ QUIGG BROTHERS, INC. PROJECT FOREMAN (ANDREW). 1

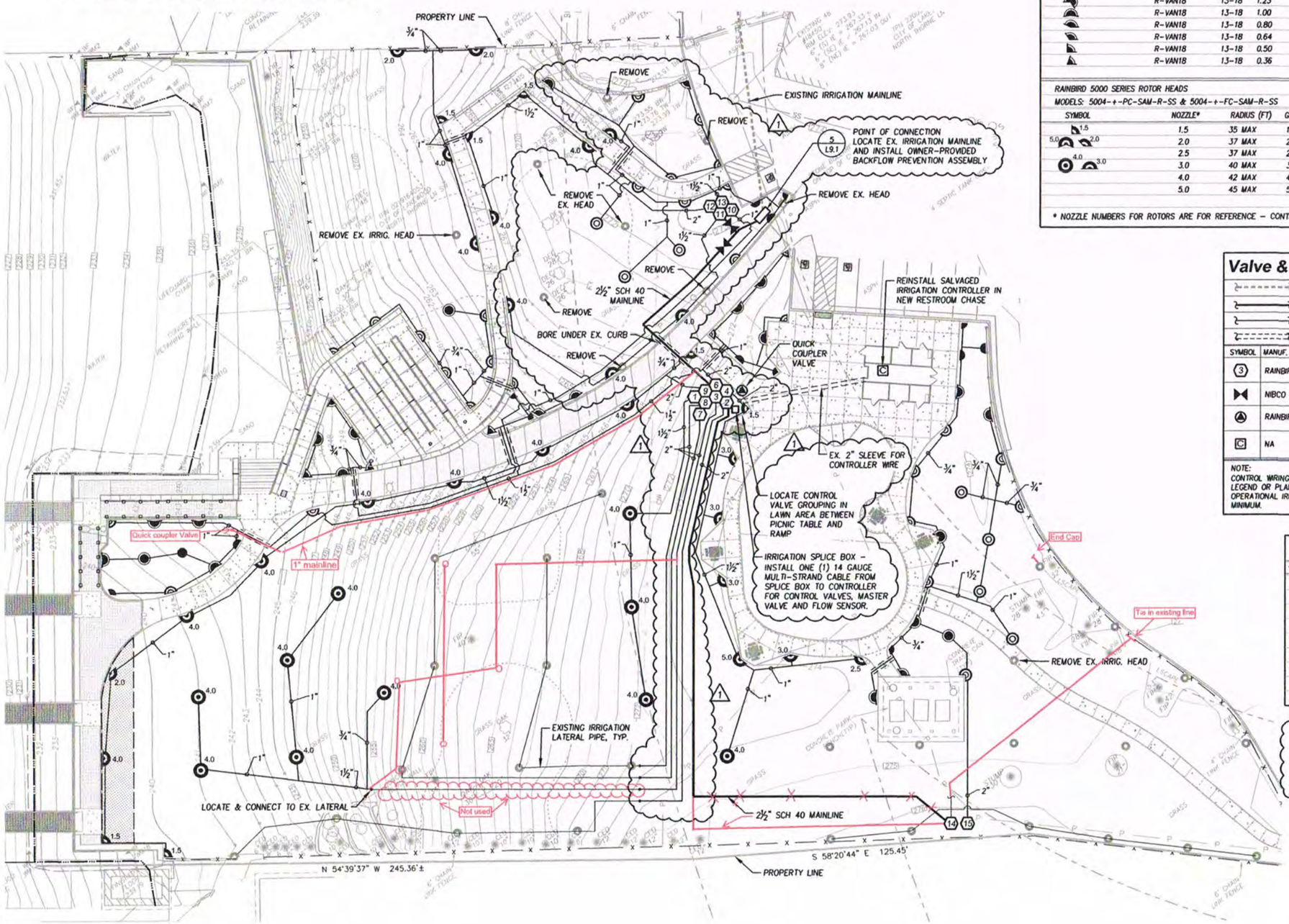

Irrigation Head Schedule

SYMBOL	CATALOG NUMBER	NOZZLE	RADIUS (FT)	GPM	PSI
SPRAY HEADS					
RAINBIRD: 1804-SAM-P45 (LAWN) & 1806-SAM-P45 (SHRUBS)					
	R-VAN14-360	8-14	1.27	45	
	R-VAN14	8-14	0.73		
	R-VAN14	8-14	0.63		
	R-VAN14	8-14	0.42		
	R-VAN14	8-14	0.32		
	R-VAN18-360	13-18	1.85	45	
	R-VAN18	13-18	1.51		
	R-VAN18	13-18	1.23		
	R-VAN18	13-18	1.00		
	R-VAN18	13-18	0.80		
	R-VAN18	13-18	0.64		
	R-VAN18	13-18	0.50		
	R-VAN18	13-18	0.36		

SYMBOL	CATALOG NUMBER	NOZZLE	RADIUS (FT)	GPM	PSI
SPRAY HEADS					
RAINBIRD: 1804-SAM-P45 (LAWN) & 1806-SAM-P45 (SHRUBS)					
	R-VAN24-360	17-24	3.48	45	
	R-VAN24	17-24	2.52		
	R-VAN24	17-24	1.96		
	R-VAN24	17-24	1.68		
	R-VAN24	17-24	1.26		
	R-VAN24	17-24	0.84		
	R-VAN24	17-24	0.60		

RAINBIRD 5000 SERIES ROTOR HEADS
MODELS: 5004-+-PC-SAM-R-SS & 5004-+-FC-SAM-R-SS

SYMBOL	NOZZLE*	RADIUS (FT)	GPM	PSI
1.5	1.5	35 MAX	1.5	45
5.0 2.0	2.0	37 MAX	2.1	
	2.5	37 MAX	2.5	
4.0 3.0	3.0	40 MAX	3.1	
	4.0	42 MAX	4.0	
	5.0	45 MAX	5.1	

* NOZZLE NUMBERS FOR ROTORS ARE FOR REFERENCE – CONTRACTOR SHALL ADJUST AS REQUIRED FOR ACTUAL CONDITIONS.

Valve & Piping Schedule

	EXISTING 2½" MAINLINE APPROXIMATE
	SCHEDULE 40 2½" PVC MAINLINE
	CLASS 200 PVC LATERAL LINE - ¾" MIN.
	CLASS 200 PVC, 6" SLEEVE

SYMBOL	MANUF. NAME	CATALOG NO.	DESCRIPTION
3	RAINBIRD	100-PEB-PRS-D 150-PEB-PRS-D	1" & 1½" AUTOMATIC REMOTE CONTROL VALVES WITH PRESSURE REGULATING MODULE
	NIBCO	T-113	2 INCH BRONZE MANUAL ISOLATION VALVE
	RAINBIRD	44LRC W/ SH-1 & 44K	1" BRASS QUICK COUPLING VALVE W/ LOCKING COVER, SUPPLY W/ HOSE SWIVEL & VALVE KEY
C	NA	- -	EXISTING CONTROLLER TO BE SALVAGED & REINSTALLED IN NEW RESTROOM BUILDING

NOTE:
CONTROL WIRING, DETECTION WIRING, AND CONDUIT (WHERE REQUIRED) IS NOT SHOWN ON LEGEND OR PLAN. PROVIDE ALL WIRING AND CONDUIT AS REQUIRED FOR A 100% OPERATIONAL IRRIGATION SYSTEM. STATION & COMMON WIRE SIZE - AWG 14 GAUGE MINIMUM.

Valve Chart

VALVE NO.	GPM	SIZE	VALVE NO.	GPM	SIZE
1	12.0	1½"	9	34.5	1½"
2	NA	MATCH EX.	10	5.0	1"
3	24.0	1½"	11	12.0	1"
4	25.5	1½"	12	32.5	1½"
5	–	–	13	26.0	1½"
6	32.5	1½"	14	NA	MATCH EX.
7	NA	MATCH EX.	15	37.0	1½"
8	NA	MATCH EX.			

MULTI-STRAND CABLE SHALL BE:
14 AWG – 50 CONDUCTOR – 600V – STRANDED CONDUCTOR, AS PROVIDED AT 'SHOW ME CABLES' (https://www.showmecables.com/) PRODUCT #: SKU 82-600-367 1

As-Built
7/2/21

SCALE: 1"=20'
0' 10' 20' 30' 40'

Call 811 two business days before you dig

Harry Todd Park Waterfront Renovation

Lakewood Parks & Recreation Department
Lakewood, WA

Robert W. Droll
Landscape Architect, PS
4405 7th Avenue SE, Ste. 203
Lacey, WA 98503
(360) 456-3813
FAX (360) 493-2063
E-MAIL bob@wdroll.com
Landscape Architecture
Site Planning
Environmental Design
Urban Design
Land Planning
Project Management
STATE OF WASHINGTON ROBERT W. DROLL LICENSED LANDSCAPE ARCHITECT

PROJECT NO. 18021
DRAWING
DESIGNED BY BD
DRAWN BY BD, PM
CHECKED BY BD

REVISION

	DATE	CHANGE
1	4/22/21	P.O.C. & CONTROL VALVES MOVED

DATE: ~~DECEMBER 22, 2020~~

Irrigation System Modification Plan REVISED 4-22-21

L9.0

O:\2018\18021 Harry Todd Park\Drawings\SHEETS\28_L9.0 - Irrigation Mod! Plan_REVISN_21-0421.dwg
Apr-22-21 11:54am

DESIGN CRITERIA

APPLICABLE CODE: 2018 INTERNATIONAL BUILDING CODE.

DEAD LOAD: ALL STRUCTURE PLUS 20 PPF UTILITY

LIVE LOAD: 100 PSF (UNIFORM) OR 400 LBS (ON 1 SF)

WIND LOAD: IBC 115 MPH, EXP. 'D'

SNOW LOAD: 25 PSF (UNIFORM)

MAX. LIVE LOAD DEFLECTION: L/360

DESIGN NOTES

DESIGN OF GANGWAY ASSUMES THAT LANDING FLOATS (BY OTHERS) ARE ADEQUATE FOR THE SAFE AND STABLE SUPPORT OF THE GANGWAY.

ALL WELDING SHALL BE PERFORMED IN CONFORMANCE WITH THE LATEST AWS D1.1 (STEEL) OR D1.2 (ALUMINUM) WELDING CODES BY AWS CERTIFIED STRUCTURAL WELDERS. FILLER WIRE FOR ALUMINUM SHALL BE ALLOY 5356.

ALL ALUMINUM IS ALLOY 6061-T6 EXCEPT AS NOTED.

ESTIMATED DEAD LOAD REACTION OF THE GANGWAY (INCL. ROLLER GUIDES) IS 2,400 LBS.

GANGWAY PICKING WEIGHT IS 4,200 LBS.

DESIGN LIVE LOAD REACTION IS 7.0 KIPS. (VERTICAL)

DESIGN WIND LOAD REACTION IS 1.88 KIPS. (HORIZONTAL)

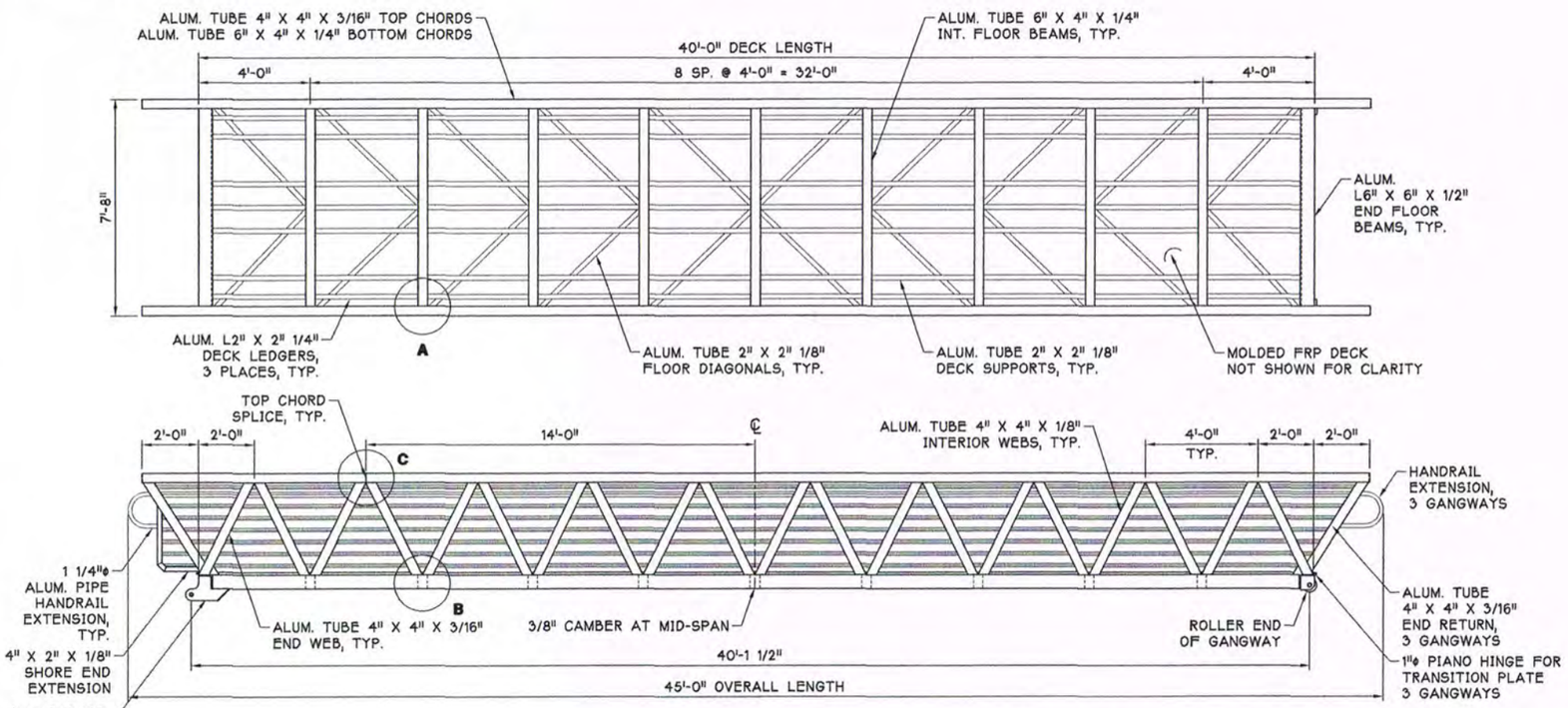

PLAN AND ELEVATION

0 1 2 4 6 8 FT.

MAKE 3 GANGWAYS WITH END RETURNS AND HANDRAIL EXTENSIONS THIS END.
MAKE 1 GANGWAY WITH END VERTICAL AND NO HANDRAIL EXTENSION.

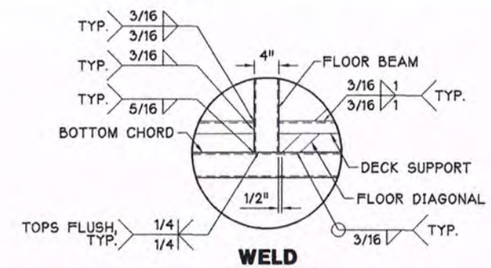

WELD DETAIL A

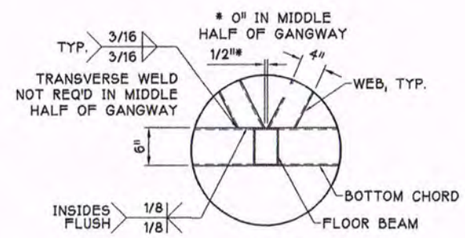

WELD DETAIL B

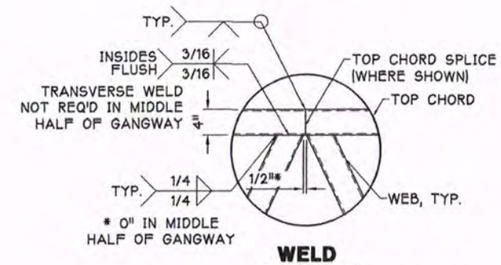

WELD DETAIL C

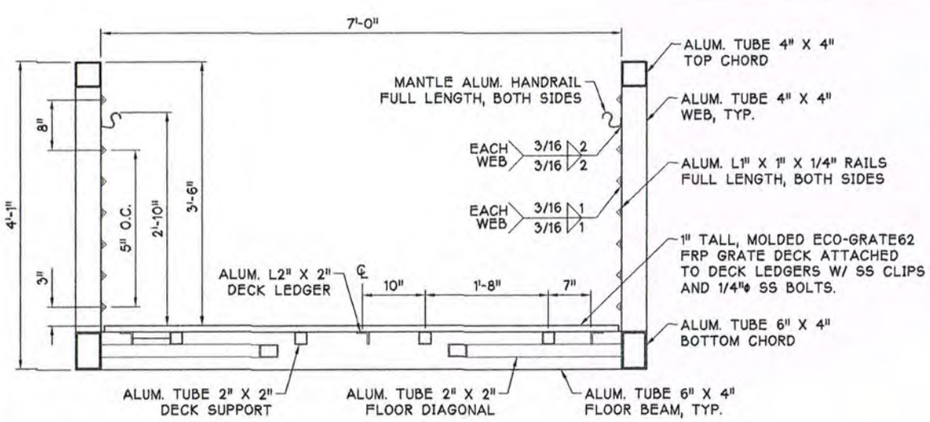

SECTION

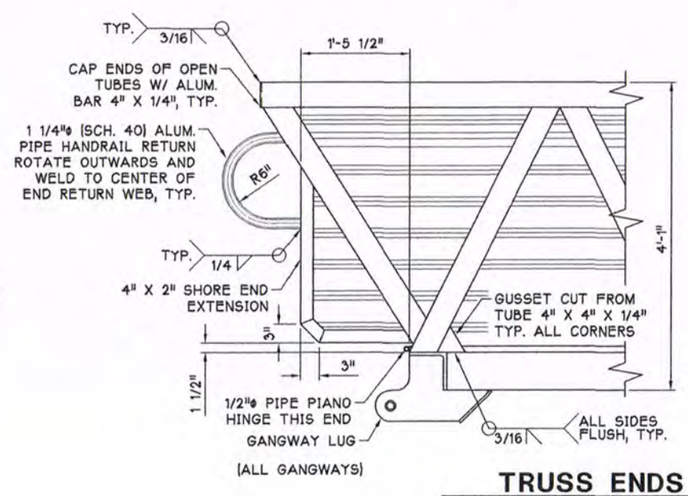

(ALL GANGWAYS)

TRUSS ENDS

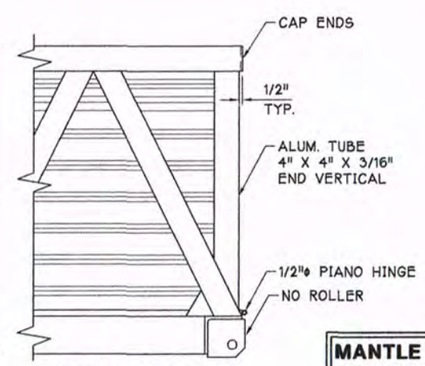

(WALKWAY SPAN A ONLY)

As-Built
7/2/21

KELLY D. LAFNER
STATE OF WASHINGTON
30745
REGISTERED
PROFESSIONAL ENGINEER
21 JUL 2020

MARINE STRUCTURES ENGINEERING, INC.
1004 COMMERCIAL AVE. #364
ANACORTES, WA 98221

MANTLE INDUSTRIES, LLC. PH (360) 332-5276
1100-C YEW AVENUE, BLAINE, WASHINGTON 98230

SCALE:	APPROVED BY:	DRAWN BY: JML
DATE: JULY '20		REVISED:

HARRY TODD PARK
WATERFRONT RENOVATION

7' X 40' ALUMINUM GANGWAY
PLAN, ELEVATION, SECTION & DETAILS

DRAWING NUMBER 1 OF 3

HARRY TODD PARK
21 JULY 2020

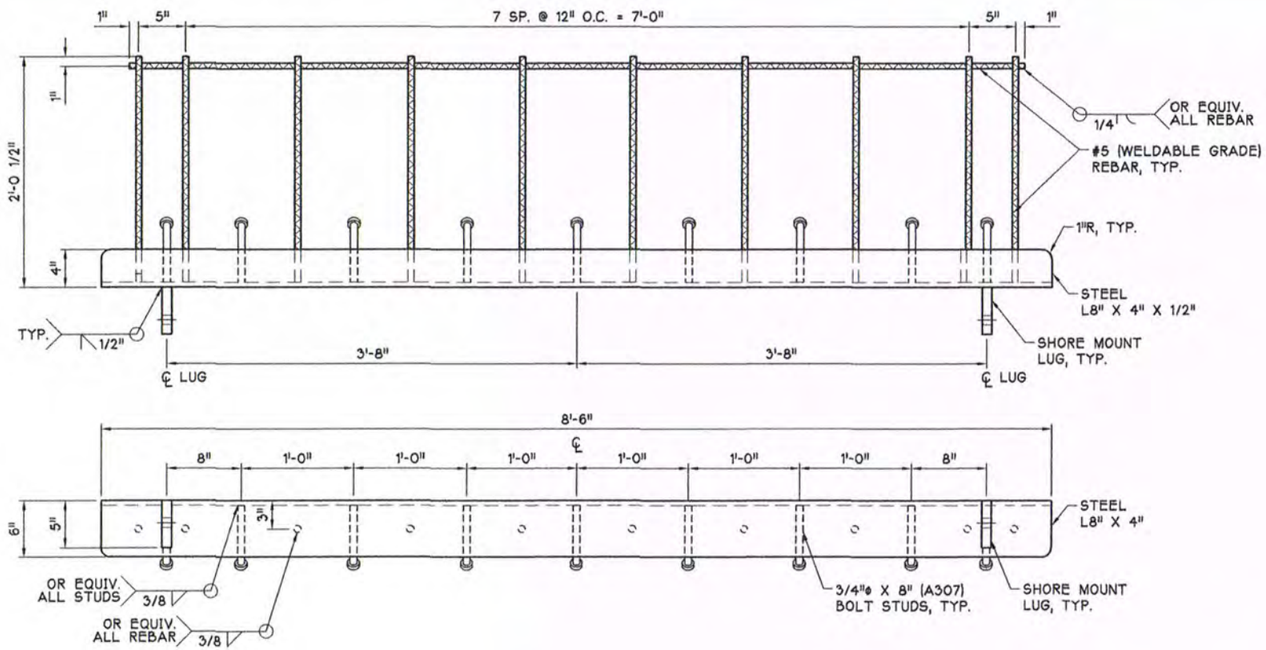

SHORE MOUNT

HOT DIP GALVANIZE AFTER FAB.
MAKE 1 FOR EACH GANGWAY AND
FOR WALKWAY SPAN A

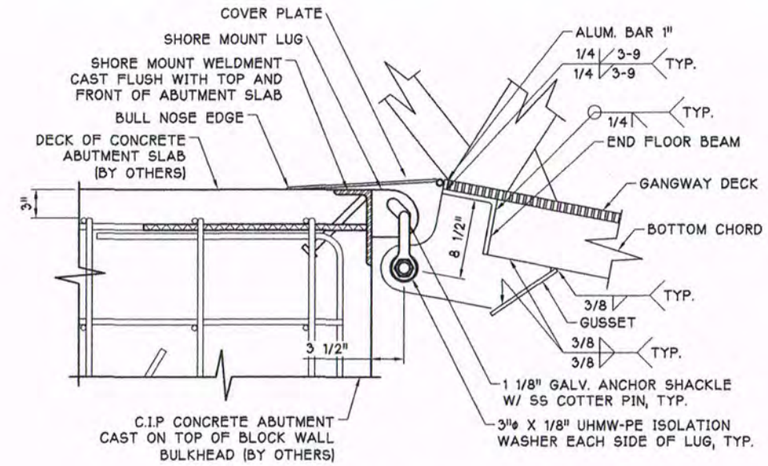

LUG END ASSEMBLY

ALL GANGWAYS
AND WALKWAY SPAN A

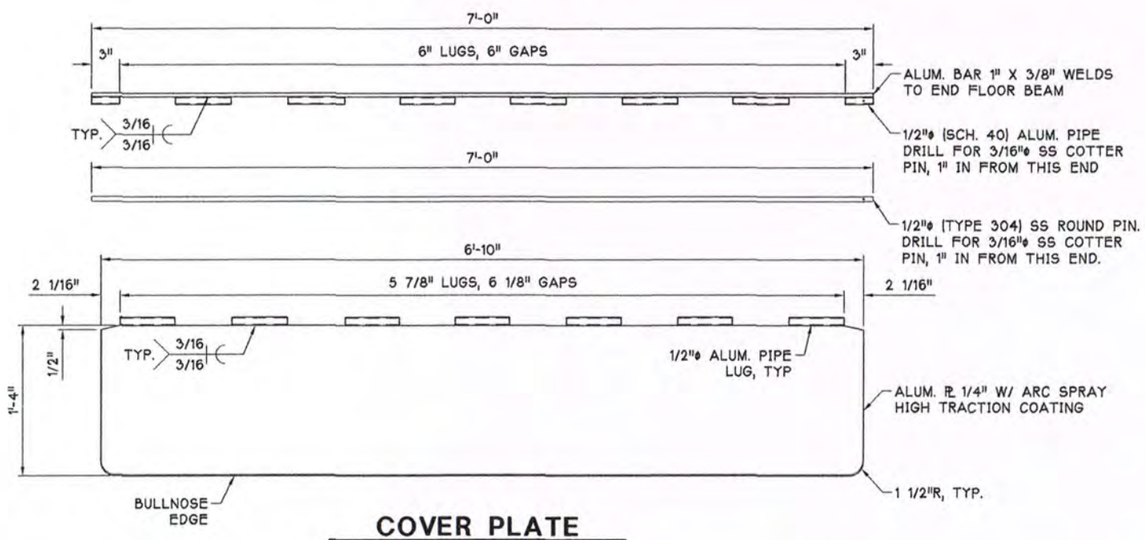

COVER PLATE

MAKE 1 FOR EACH GANGWAY
MAKE 2 FOR WALKWAY SPAN A

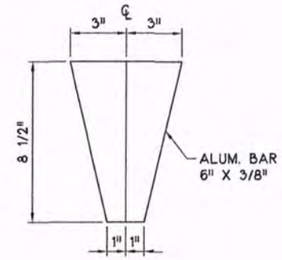

GUSSET

MAKE 2 EACH GANGWAY
AND WALKWAY SPAN A

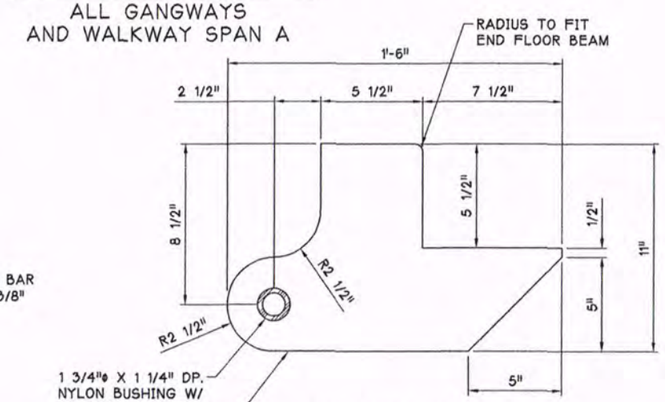

GANGWAY LUG

MAKE 2 EACH GANGWAY
AND WALKWAY SPAN A

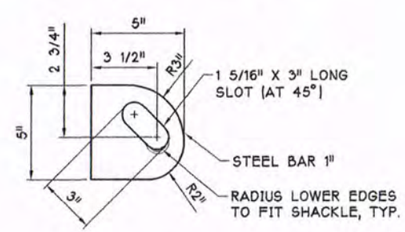

SHORE MOUNT LUG

MAKE 2 LUGS FOR EACH
SHORE MOUNT

As-Built
7/2/21

KELLY D. LAYNE
STATE OF WASHINGTON
30745
REGISTERED
PROFESSIONAL ENGINEER
21 JUL 2020

MARINE STRUCTURES
ENGINEERING, INC.
1004 COMMERCIAL AVE. #364
ANACORTES, WA 98221

MANTLE INDUSTRIES, LLC. PH (360) 332-5276
1100-C YEW AVENUE, BLAINE, WASHINGTON 98230

SCALE:	APPROVED BY:	DRAWN BY: JML
DATE: JULY '20		REVISED:

HARRY TODD PARK
WATERFRONT RENOVATION

7' X 40' ALUMINUM GANGWAY
SHORE END

DRAWING NUMBER 2 OF 3

HARRY TODD PARK
21 JULY 2020

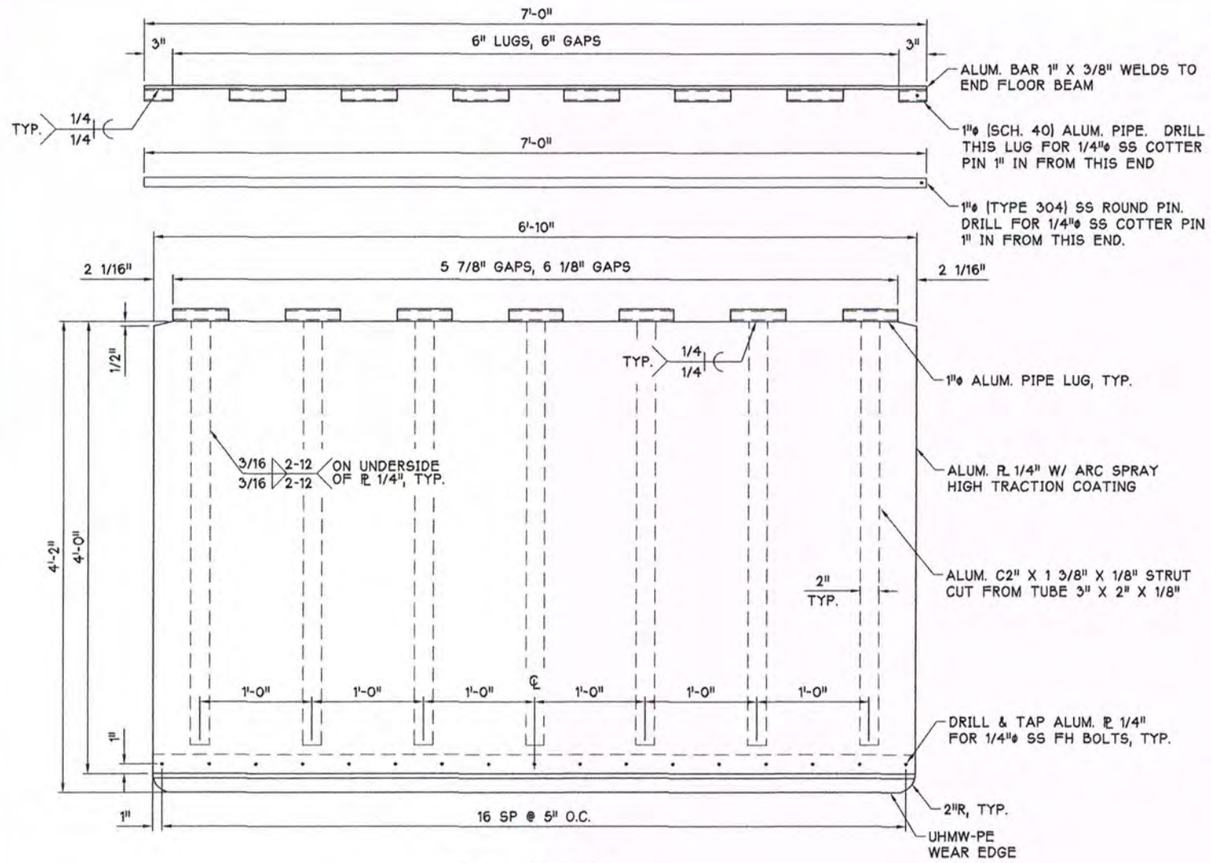

FLOAT END TRANSITION

MAKE 1 FOR EACH GANGWAY
NOT REQUIRED FOR WALKWAY SPAN A

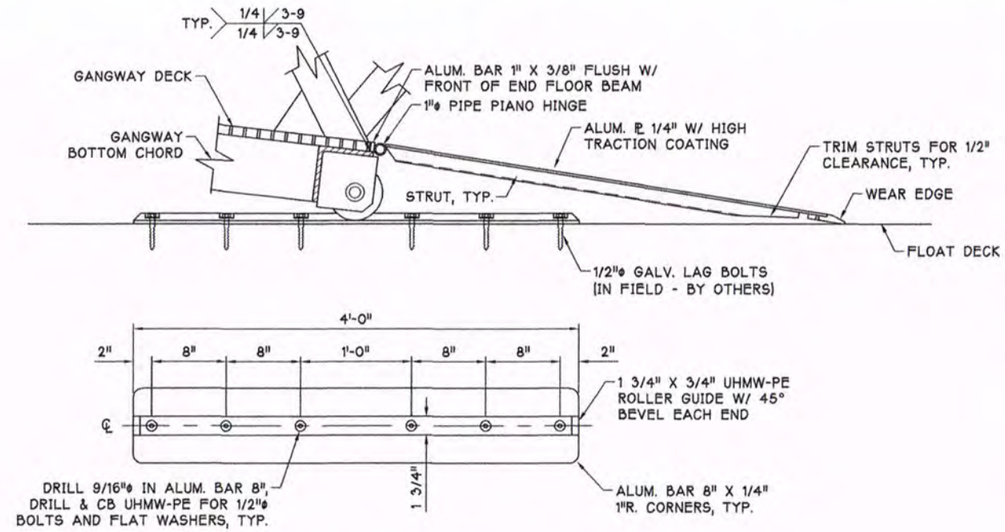

FLOAT END ASSEMBLY

MAKE 2 ROLLER GUIDES FOR EACH GANGWAY
NOT REQUIRED FOR WALKWAY SPAN A

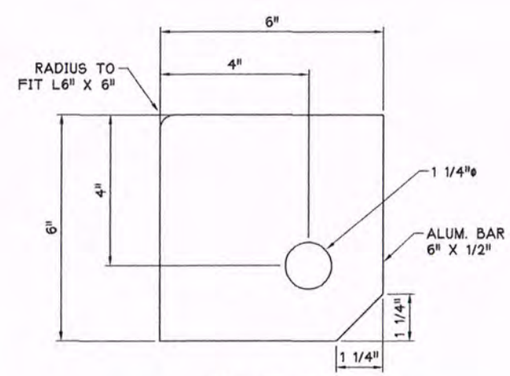

ROLLER TAB

MAKE 4 ROLLER TABS EACH GANGWAY
AND WALKWAY SPAN A

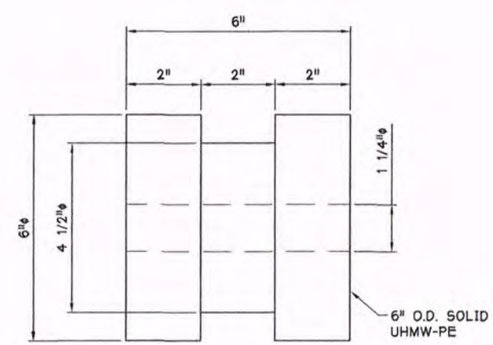

ROLLER

MAKE 2 ROLLERS FOR EACH GANGWAY
NOT REQUIRED FOR WALKWAY SPAN A

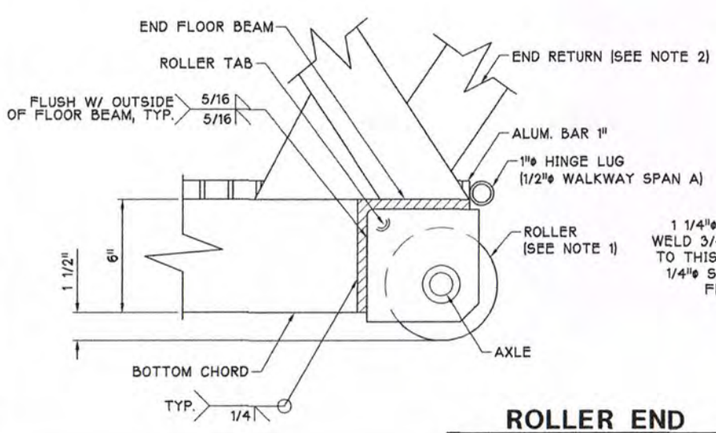

ROLLER END

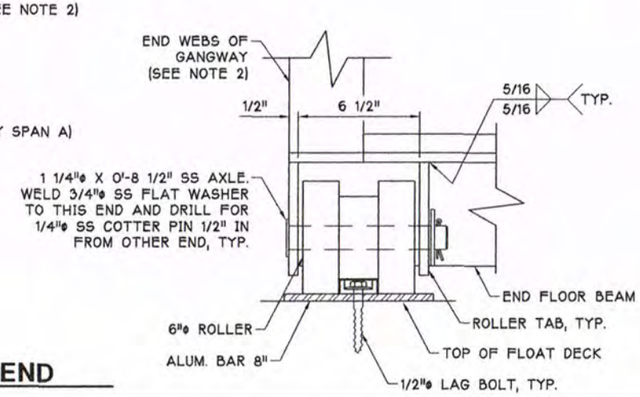

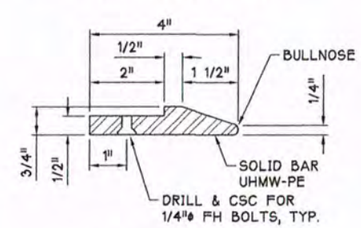

WEAR EDGE

NOTES

1) OFFSHORE END OF WALKWAY SPAN A HAS ROLLER TABS BUT NO ROLLERS.

2) OFFSHORE END OF WALKWAY SPAN A HAS END VERTICAL INSTEAD OF END RETURN SEE TRUSS ENDS ON SHEET 1.

3) OFFSHORE END OF WALKWAY SPAN A RECEIVES A COVER PLATE WITH A 1/2"ϕ PIANO HINGE.

KELLY D. LAFAVE STATE OF WASHINGTON 30745 REGISTERED PROFESSIONAL ENGINEER 21 JUL 2020

As-Built 7/2/21

MARINE STRUCTURES ENGINEERING, INC.
1004 COMMERCIAL AVE. #364
ANACORTES, WA 98221

MANTLE INDUSTRIES, LLC. PH (360) 332-5276
1100-C YEW AVENUE, BLAINE, WASHINGTON 98230

SCALE:	APPROVED BY:	DRAWN BY: JML
DATE: JULY '20		REVISED:

HARRY TODD PARK
WATERFRONT CONSTRUCTION

7' X 40' ALUMINUM GANGWAY
ROLLER END

DRAWING NUMBER 3 OF 3

HARRY TODD PARK
21 JULY 2020

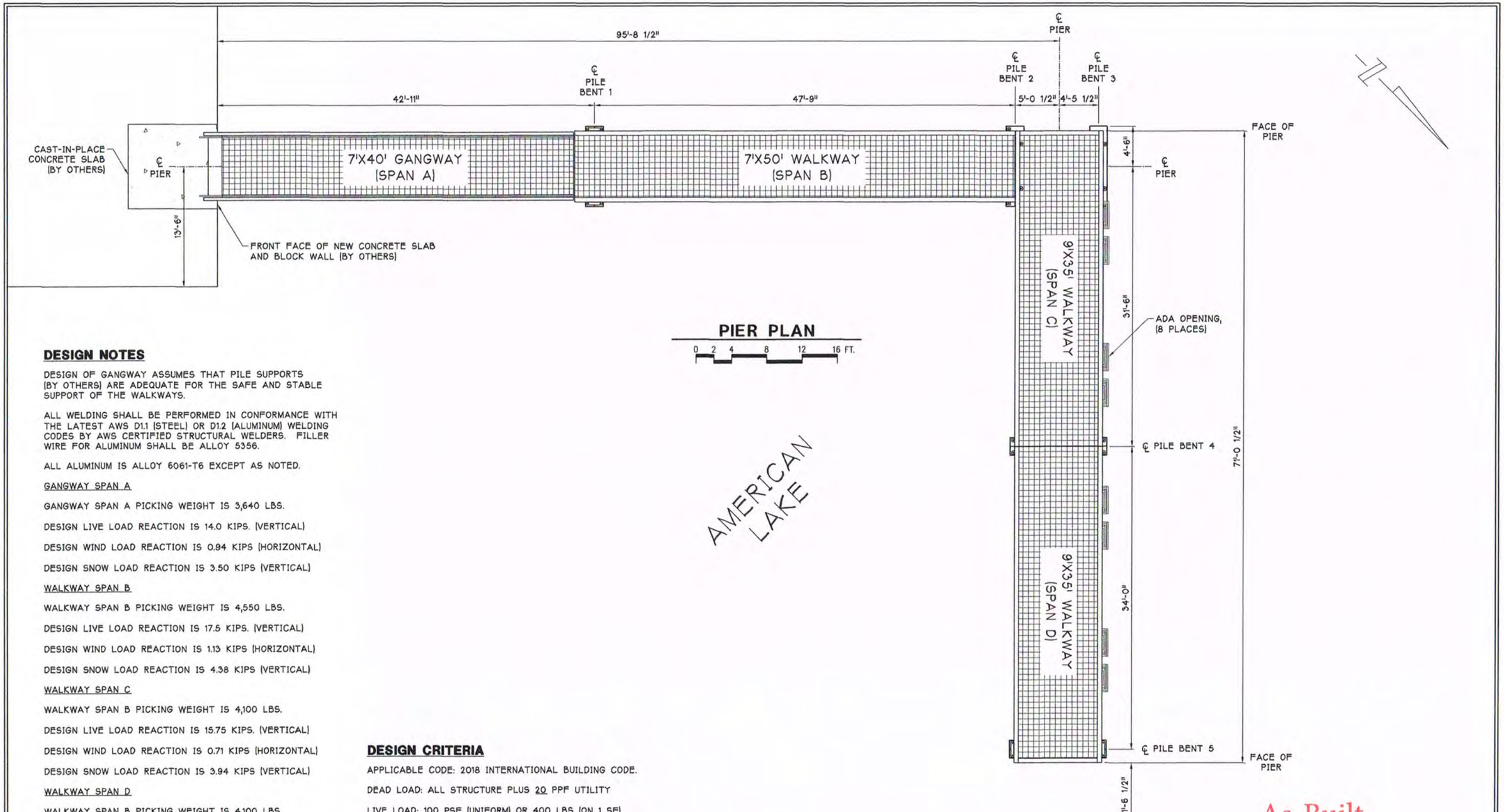

PIER PLAN

0 2 4 8 12 16 FT.

DESIGN NOTES

DESIGN OF GANGWAY ASSUMES THAT PILE SUPPORTS (BY OTHERS) ARE ADEQUATE FOR THE SAFE AND STABLE SUPPORT OF THE WALKWAYS.

ALL WELDING SHALL BE PERFORMED IN CONFORMANCE WITH THE LATEST AWS D1.1 (STEEL) OR D1.2 (ALUMINUM) WELDING CODES BY AWS CERTIFIED STRUCTURAL WELDERS. FILLER WIRE FOR ALUMINUM SHALL BE ALLOY 5356.

ALL ALUMINUM IS ALLOY 6061-T6 EXCEPT AS NOTED.

GANGWAY SPAN A

GANGWAY SPAN A PICKING WEIGHT IS 3,640 LBS.

DESIGN LIVE LOAD REACTION IS 14.0 KIPS. (VERTICAL)

DESIGN WIND LOAD REACTION IS 0.94 KIPS (HORIZONTAL)

DESIGN SNOW LOAD REACTION IS 3.50 KIPS (VERTICAL)

WALKWAY SPAN B

WALKWAY SPAN B PICKING WEIGHT IS 4,550 LBS.

DESIGN LIVE LOAD REACTION IS 17.5 KIPS. (VERTICAL)

DESIGN WIND LOAD REACTION IS 1.13 KIPS (HORIZONTAL)

DESIGN SNOW LOAD REACTION IS 4.38 KIPS (VERTICAL)

WALKWAY SPAN C

WALKWAY SPAN B PICKING WEIGHT IS 4,100 LBS.

DESIGN LIVE LOAD REACTION IS 15.75 KIPS. (VERTICAL)

DESIGN WIND LOAD REACTION IS 0.71 KIPS (HORIZONTAL)

DESIGN SNOW LOAD REACTION IS 3.94 KIPS (VERTICAL)

WALKWAY SPAN D

WALKWAY SPAN B PICKING WEIGHT IS 4,100 LBS.

DESIGN LIVE LOAD REACTION IS 15.75 KIPS. (VERTICAL)

DESIGN WIND LOAD REACTION IS 0.81 KIPS (HORIZONTAL)

DESIGN SNOW LOAD REACTION IS 3.94 KIPS (VERTICAL)

DESIGN CRITERIA

APPLICABLE CODE: 2018 INTERNATIONAL BUILDING CODE.

DEAD LOAD: ALL STRUCTURE PLUS 20 PPF UTILITY

LIVE LOAD: 100 PSF (UNIFORM) OR 400 LBS (ON 1 SF)

WIND LOAD: IBC 115 MPH, EXP. 'D'

SNOW LOAD: 25 PSF (UNIFORM)

LIVE LOAD DEFLECTION: L/360

As-Built
7/2/21

KELLY D. LAFAVE
STATE OF WASHINGTON
30745
REGISTERED PROFESSIONAL ENGINEER
21 JUL 2020

MARINE STRUCTURES ENGINEERING, INC.
1004 COMMERCIAL AVE. #364
ANACORTES, WA 98221

MANTLE INDUSTRIES, LLC. PH (360) 332-5276
1100-C YEW AVENUE, BLAINE, WASHINGTON 98230

SCALE:	APPROVED BY:	DRAWN BY: JML
DATE: JULY '20		REVISED:
HARRY TODD PARK WATERFRONT RENOVATION		
ALUMINUM PIER PLAN DESIGN NOTES		DRAWING NUMBER 1 OF 6

3029-HARRY TODD PIERS\PIER SPANS 7X35.DWG
21 JULY 2020

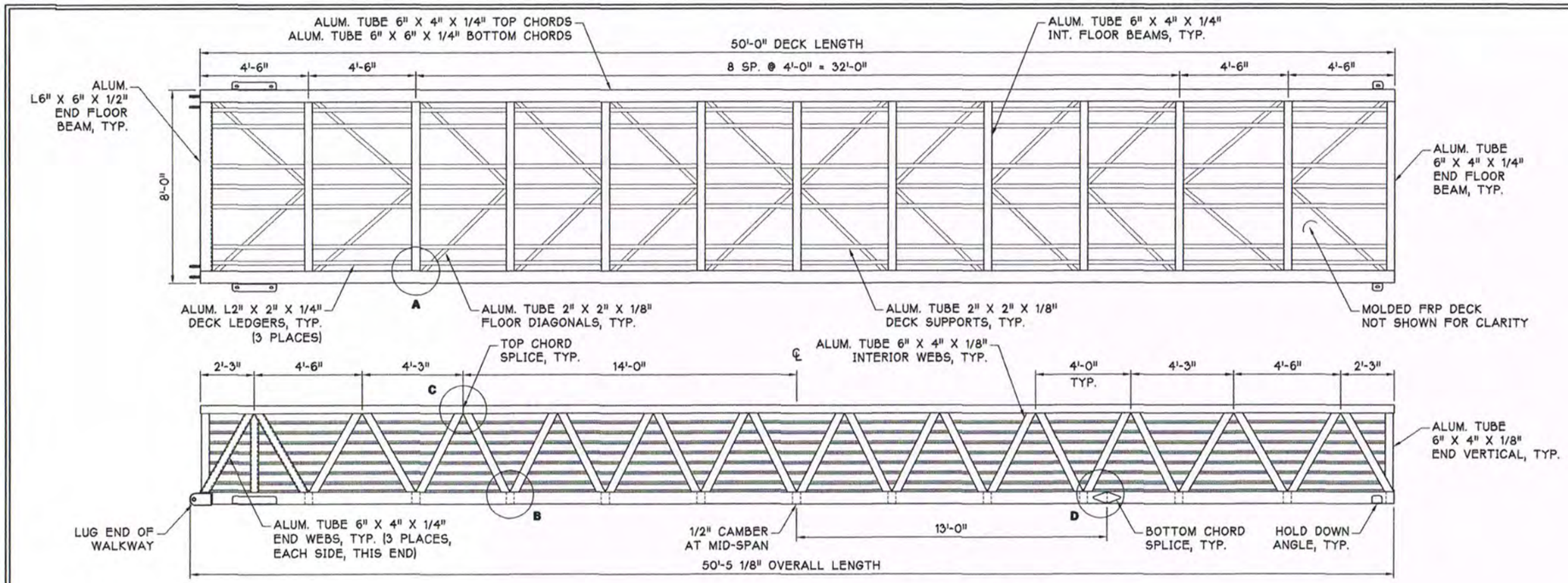

PLAN AND ELEVATION

0 1 2 4 6 8 FT.

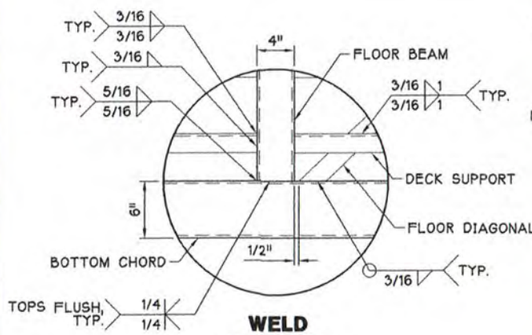

WELD DETAIL A

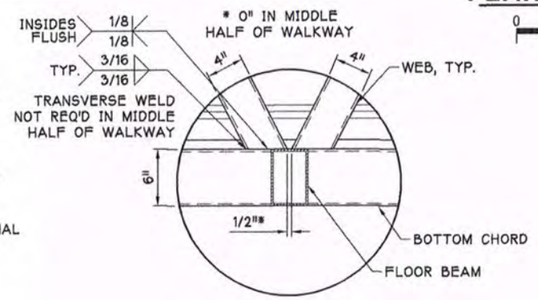

WELD DETAIL B

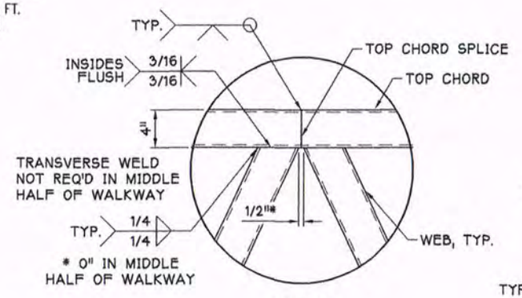

WELD DETAIL C

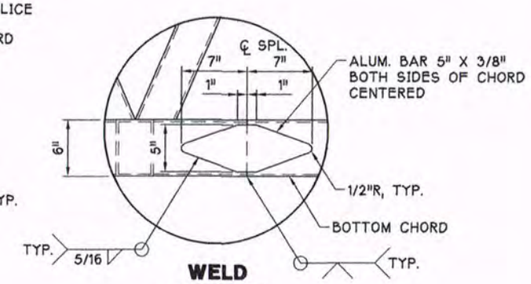

WELD DETAIL D

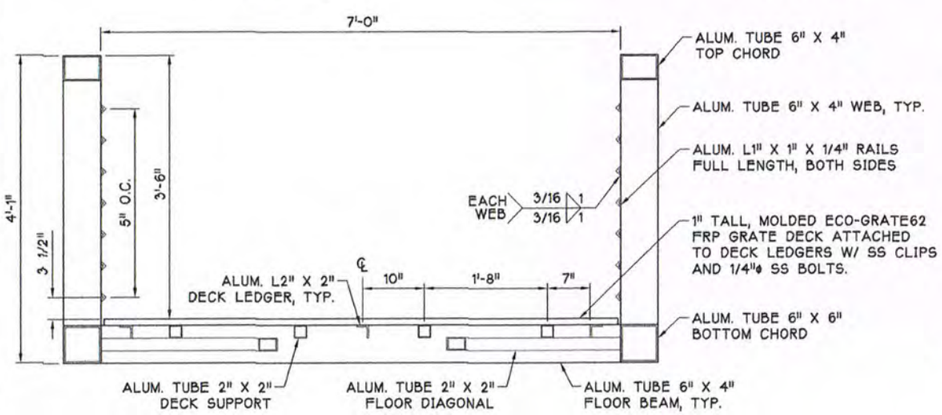

SECTION

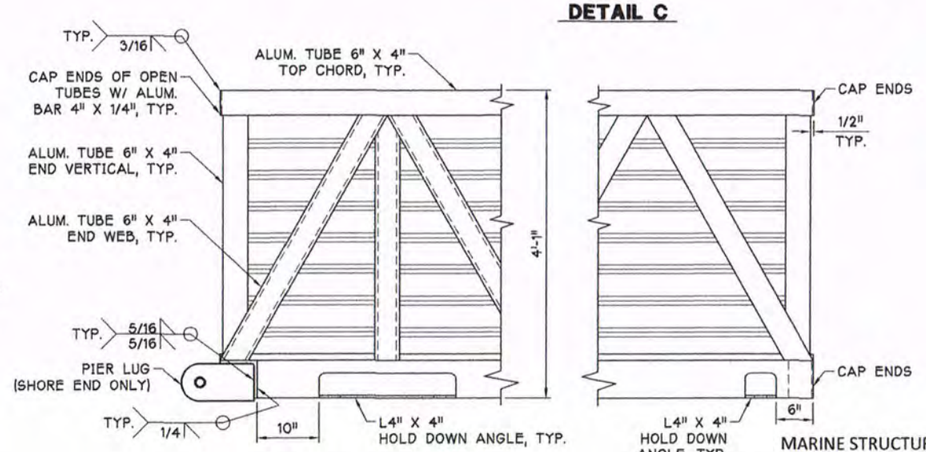

TRUSS ENDS

As-Built
7/2/21

KELLY D. LAMPMAN STATE OF WASHINGTON 30745 REGISTERED PROFESSIONAL ENGINEER 21 JUL 2020

MARINE STRUCTURES ENGINEERING, INC.
1004 COMMERCIAL AVE. #364
ANACORTES, WA 98221

MANTLE INDUSTRIES, LLC. PH (360) 332-5276
1100-C YEW AVENUE, BLAINE, WASHINGTON 98230

SCALE:	APPROVED BY:	DRAWN BY: JML
DATE: JULY '20		REVISED:

HARRY TODD PARK
WATERFRONT RENOVATION

7' X 50' ALUMINUM PIER SPAN B
PLAN, ELEVATION, SECTION & DETAILS

DRAWING NUMBER 2 OF 6

3029-HARRY TODD PIERS\PIER SPANS 7X35.DWG
21 JULY 2020

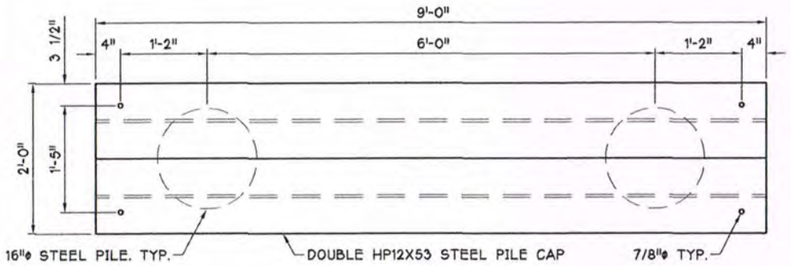

STEEL PILE CAP

BENT 1
(BY OTHERS)

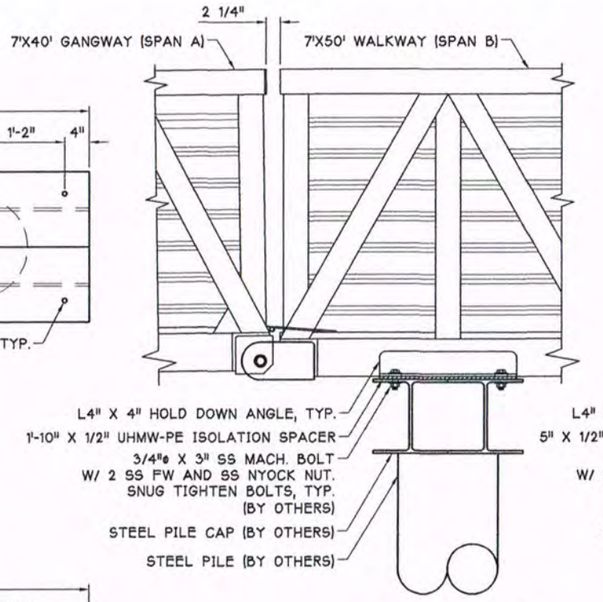

PILE CAP ASSY

BENT 1

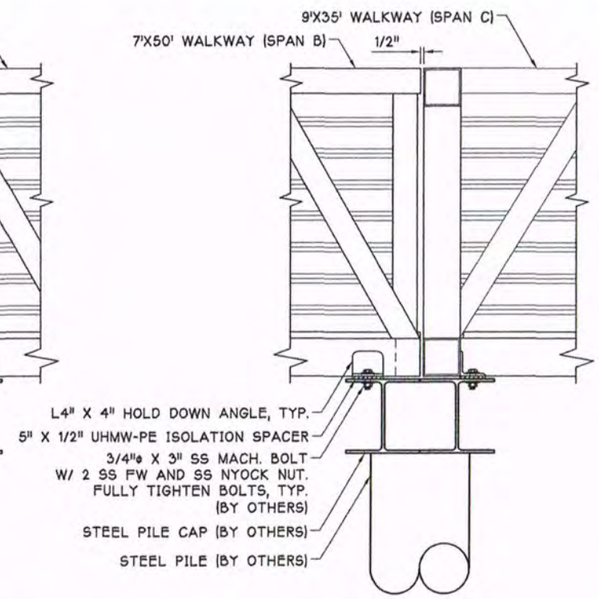

PILE CAP ASSY

BENT 2

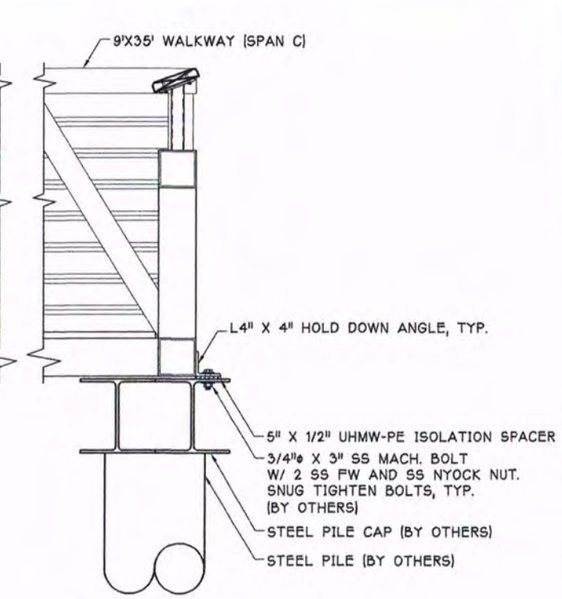

PILE CAP ASSY

BENT 3

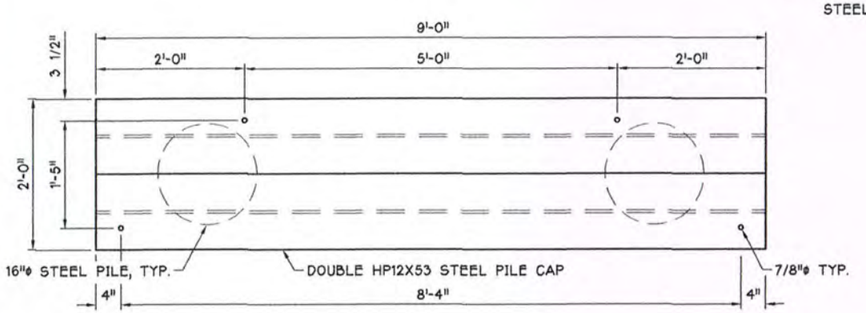

STEEL PILE CAP

BENTS 2 & 3
(BY OTHERS)

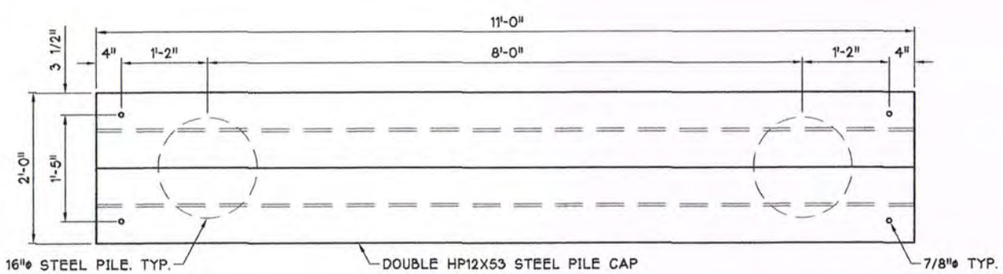

STEEL PILE CAP

BENTS 4 & 5
(BY OTHERS)

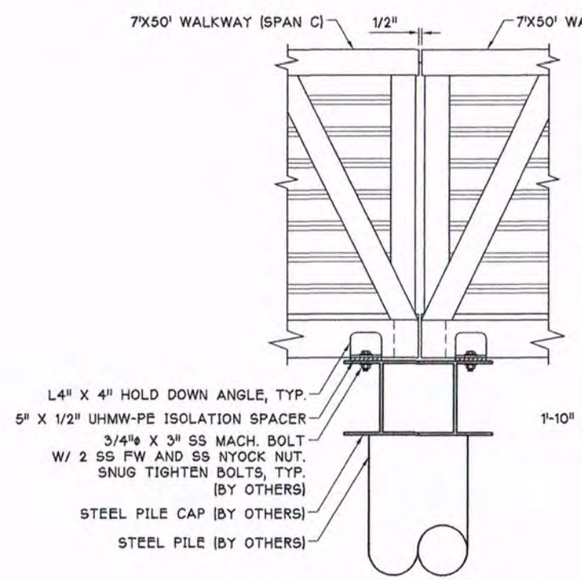

PILE CAP ASSY

BENT 4

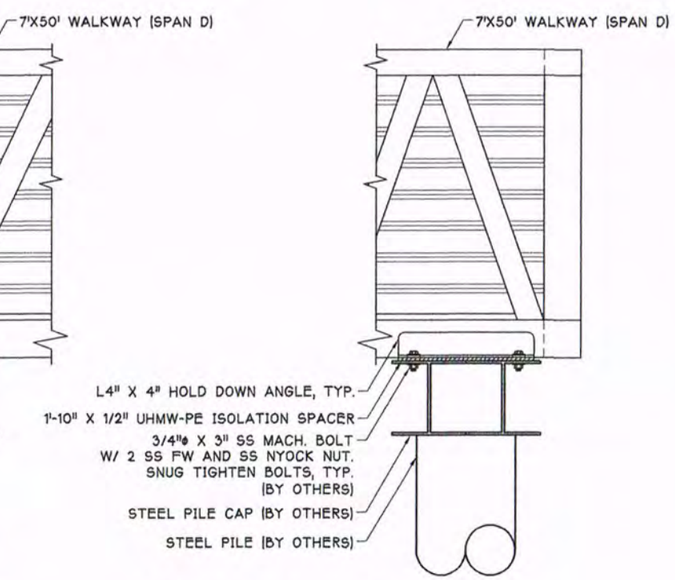

PILE CAP ASSY

BENT 5

STEEL PILE CAP DRAWINGS
PROVIDED FOR REFERENCE ONLY

As-Built
7/2/21

KELLY D. LAPAVE
STATE OF WASHINGTON
30745
REGISTERED
PROFESSIONAL ENGINEER
21 JUL 2020

MARINE STRUCTURES
ENGINEERING, INC.
1004 COMMERCIAL AVE. #364
ANACORTES, WA 98221

MANTLE INDUSTRIES, LLC. PH (360) 332-5276
1100-C YEW AVENUE, BLAINE, WASHINGTON 98230

SCALE:	APPROVED BY:	DRAWN BY: JML
DATE: JULY '20		REVISED:

HARRY TODD PARK
WATERFRONT RENOVATION

ALUMINUM PIER SPANS
PILE CAP CONNECTION DETAILS

DRAWING NUMBER 6 OF 6

3029-HARRY TODD PIERS\PIER SPANS 7X35.DWG
21 JULY 2020

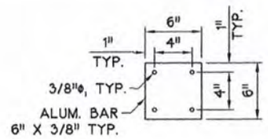

RAILING BASEPLATE

MAKE 28

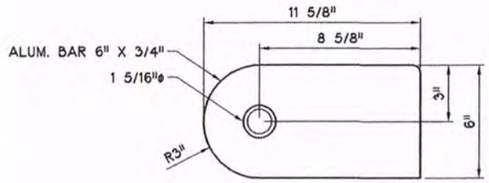

PIER LUG

MAKE 4 - WALKWAY SPAN B

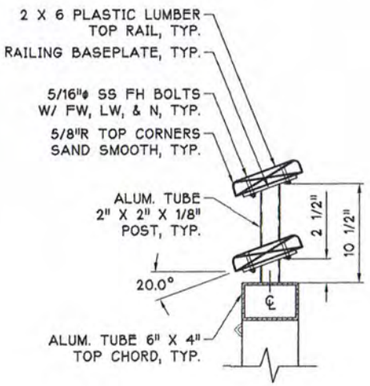

TOP RAIL SUPPORT

WALKWAY SPANS C & D

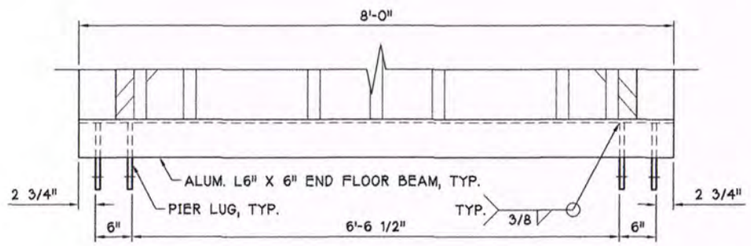

PIER LUG ASSY

WALKWAY SPAN B

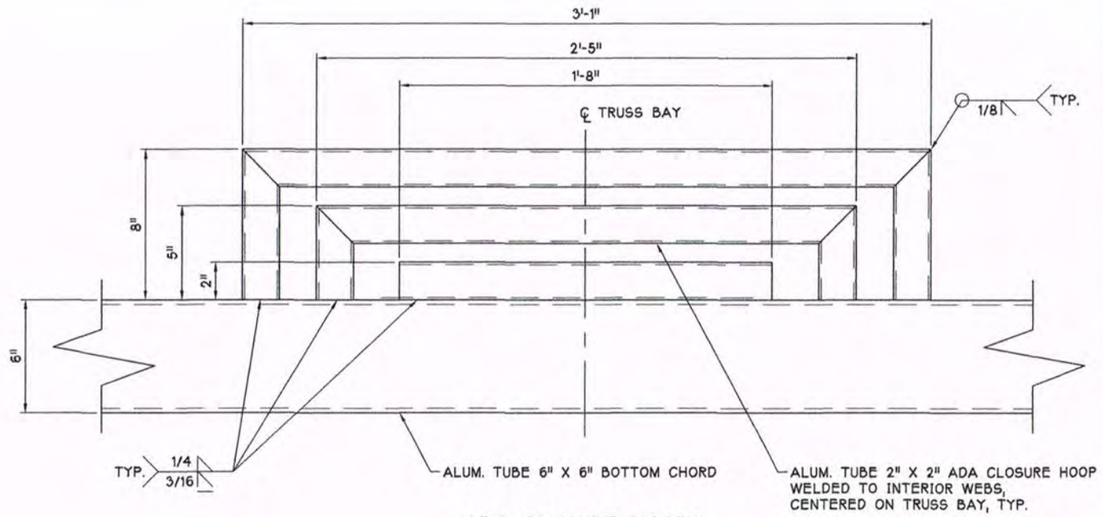

ADA CLOSURE HOOPS

(8 PLACES)

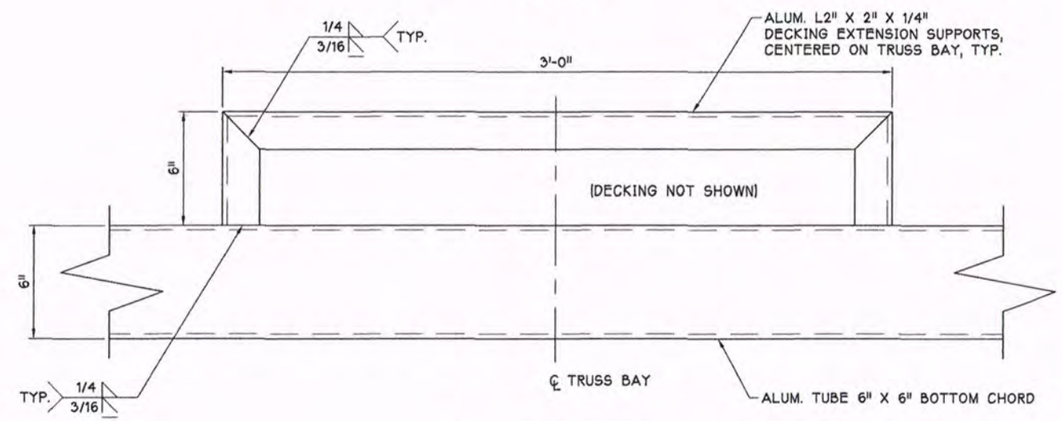

ADA DECK EXTENSION

(8 PLACES)

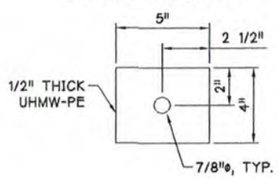

UHMW-PE ISOLATION SPACER

MAKE 6

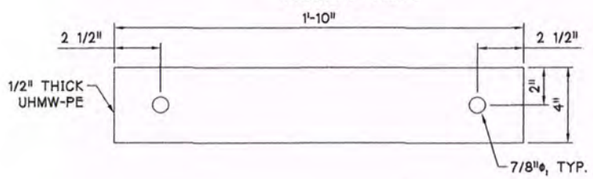

UHMW-PE ISOLATION SPACER

MAKE 6

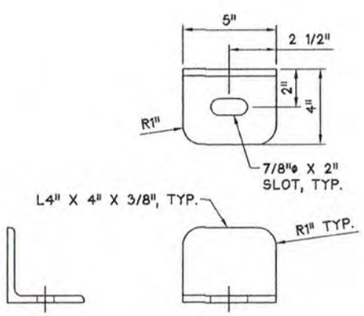

HOLD-DOWN ANGLES

MAKE 10

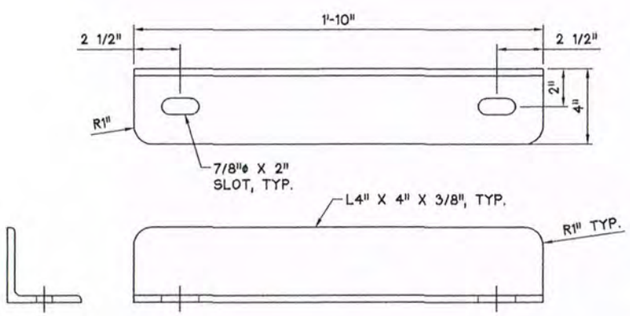

HOLD-DOWN ANGLES

MAKE 4

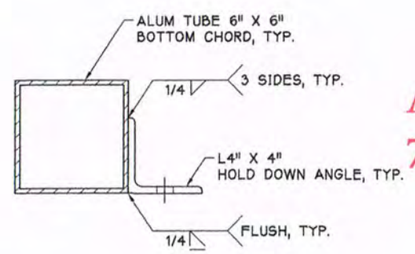

HOLD-DOWN ANGLES ASSY

As-Built
7/2/21

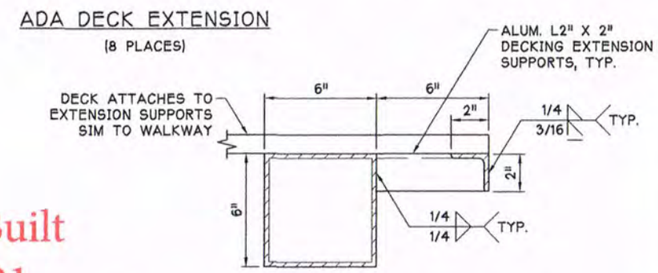

ADA DECK EXTENSION ASSY

KELLY D. LAFAVE
STATE OF WASHINGTON
30745
REGISTERED
PROFESSIONAL ENGINEER
21 JUL 2020

MARINE STRUCTURES
ENGINEERING, INC.
1004 COMMERCIAL AVE. #364
ANACORTES, WA 98221

MANTLE INDUSTRIES, LLC. PH (360) 332-5276
1100-C YEW AVENUE, BLAINE, WASHINGTON 98230

SCALE:	APPROVED BY:	DRAWN BY: JML
DATE: JULY '20		REVISED:

HARRY TODD PARK
WATERFRONT RENOVATION

ALUMINUM PIER SPANS
RAILING AND CONNECTION DETAILS

DRAWING NUMBER 5 OF 6

3029-HARRY TODD PIERS\PIER SPANS 7X35.DWG
21 JULY 2020

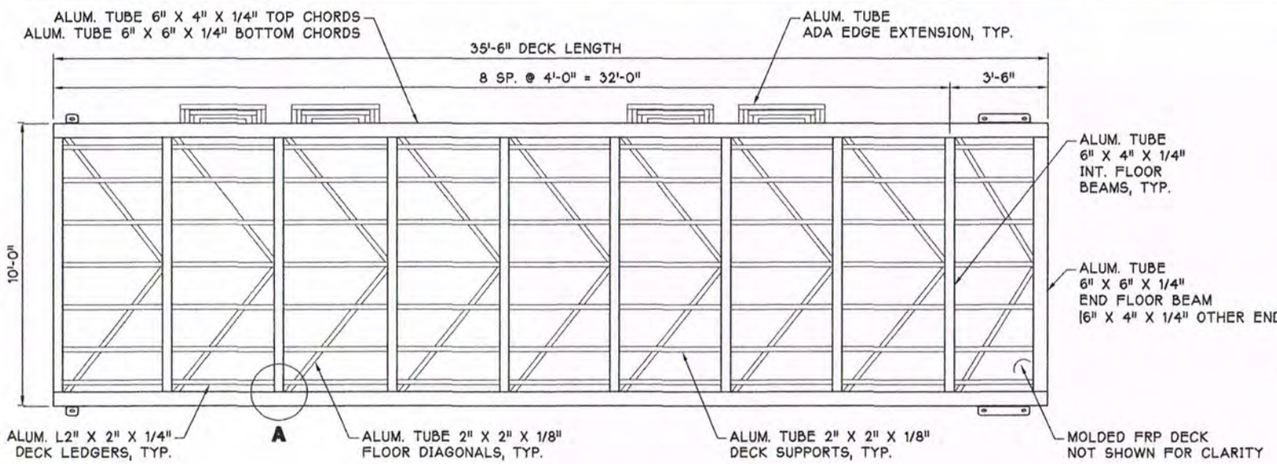

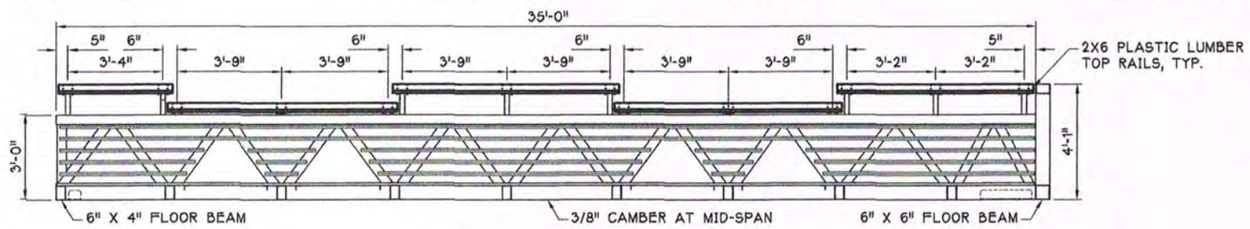

WATERWARD TRUSS

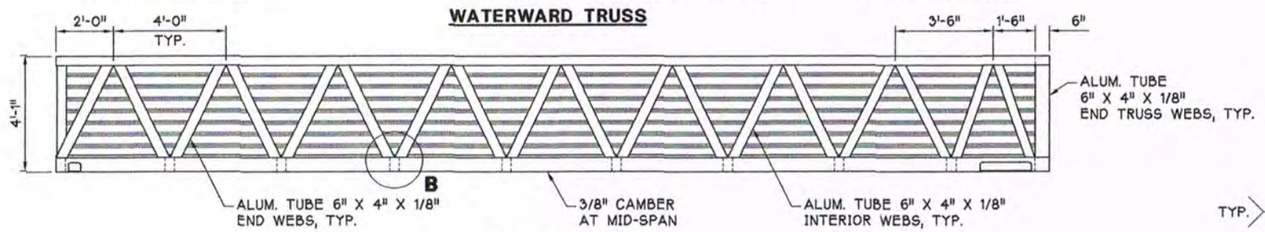

SHOREWARD TRUSS

PLAN AND ELEVATION

0 1 2 4 6 8 FT.

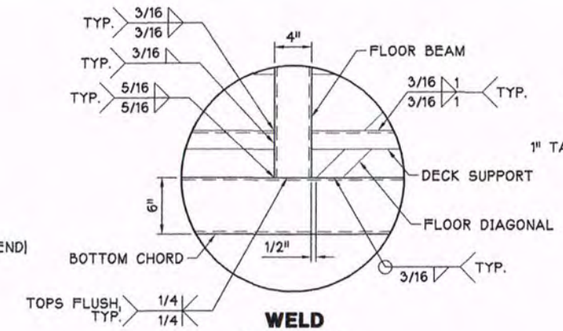

WELD DETAIL A

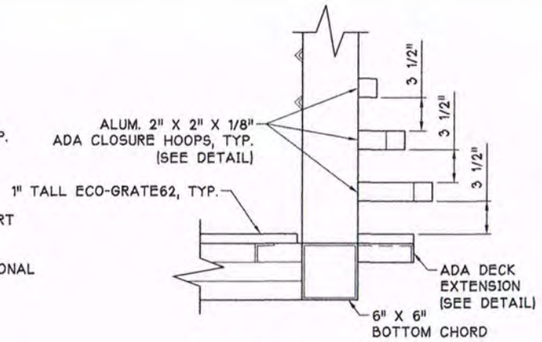

ADA CLOSURE LOOPS DETAIL

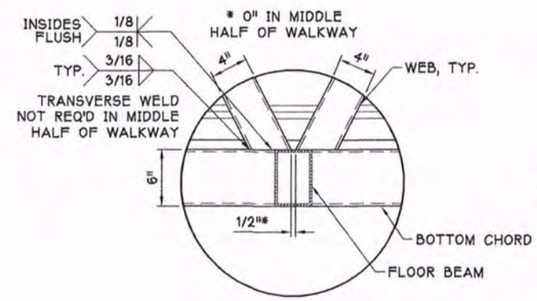

WELD DETAIL B

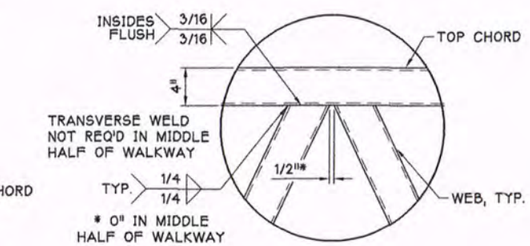

WELD DETAIL C

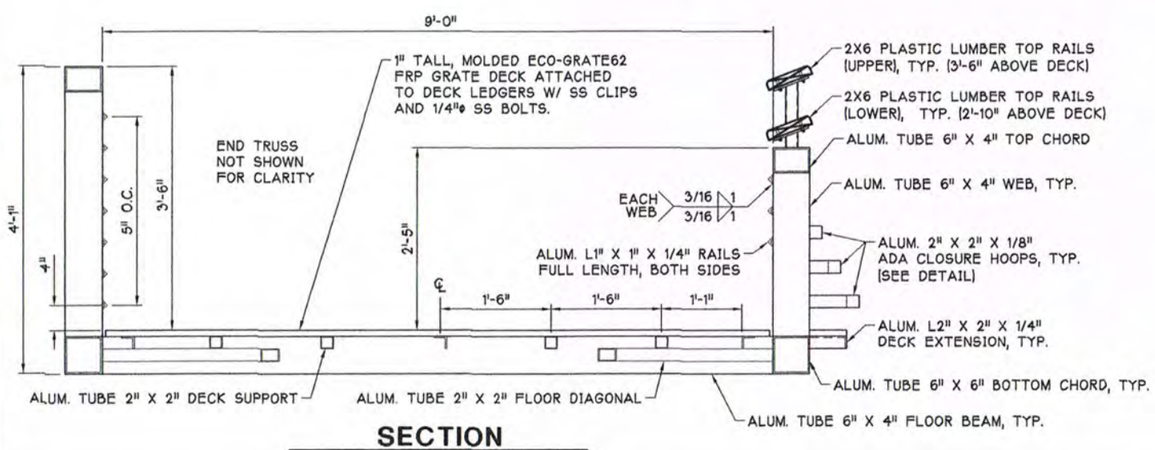

SECTION

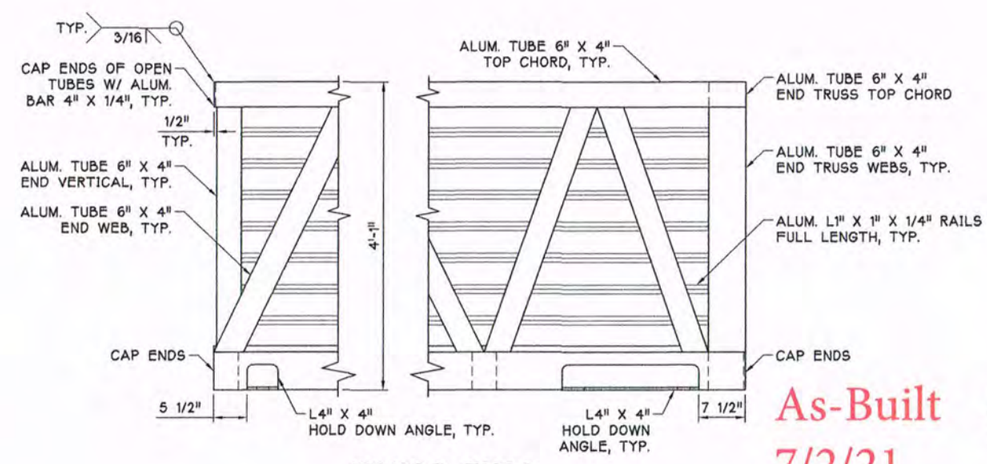

TRUSS ENDS

(TALL TRUSS SHOWN)

As-Built
7/2/21

KELLY D. LAYNE
STATE OF WASHINGTON
30745
REGISTERED
PROFESSIONAL ENGINEER
21 JUL 2020

MARINE STRUCTURES
ENGINEERING, INC.
1004 COMMERCIAL AVE. #364
ANACORTES, WA 98221

MANTLE INDUSTRIES, LLC. PH (360) 332-5276
1100-C YEW AVENUE, BLAINE, WASHINGTON 98230

SCALE:	APPROVED BY:	DRAWN BY: JML
DATE: JULY '20		REVISED:

HARRY TODD PARK
WATERFRONT RENOVATION

7' X 35' ALUMINUM PIER SPAN D
PLAN, ELEVATION, SECTION & DETAILS

DRAWING NUMBER 4 OF 6

3029-HARRY TODD PIERS\PIER SPANS 7X35.DWG
21 JULY 2020

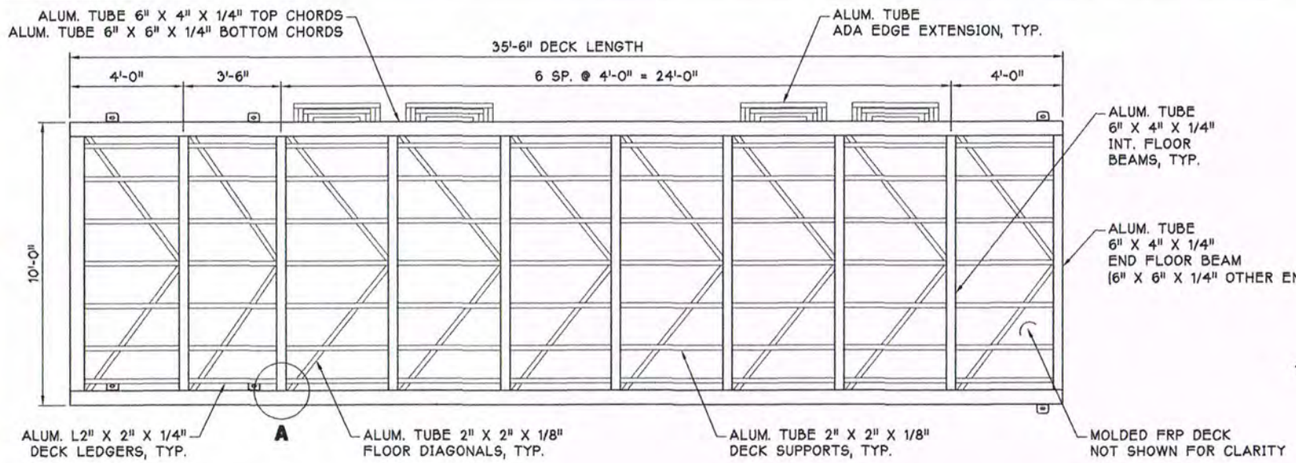

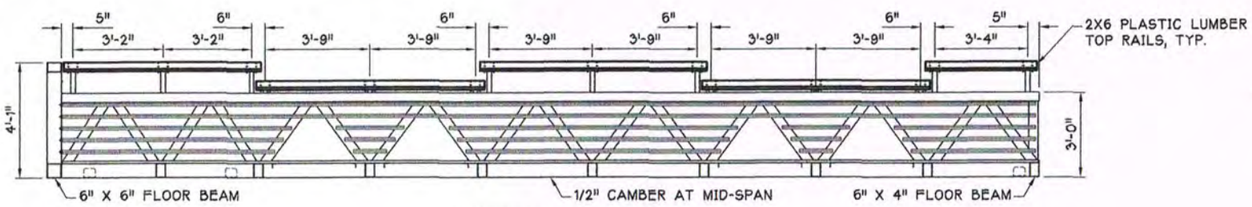

WATERWARD TRUSS

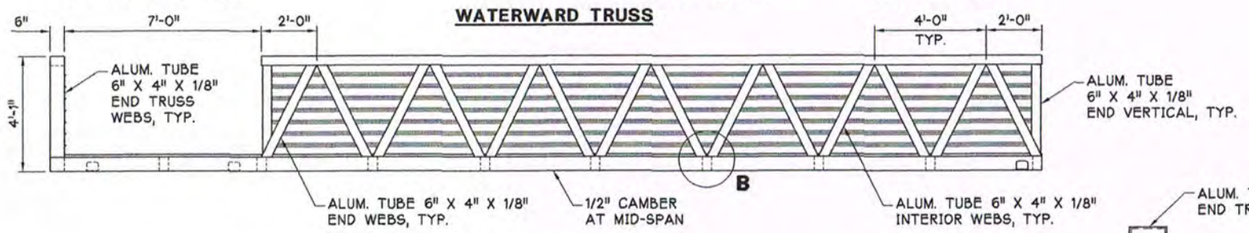

SHOREWARD TRUSS

PLAN AND ELEVATION

0 1 2 4 6 8 FT.

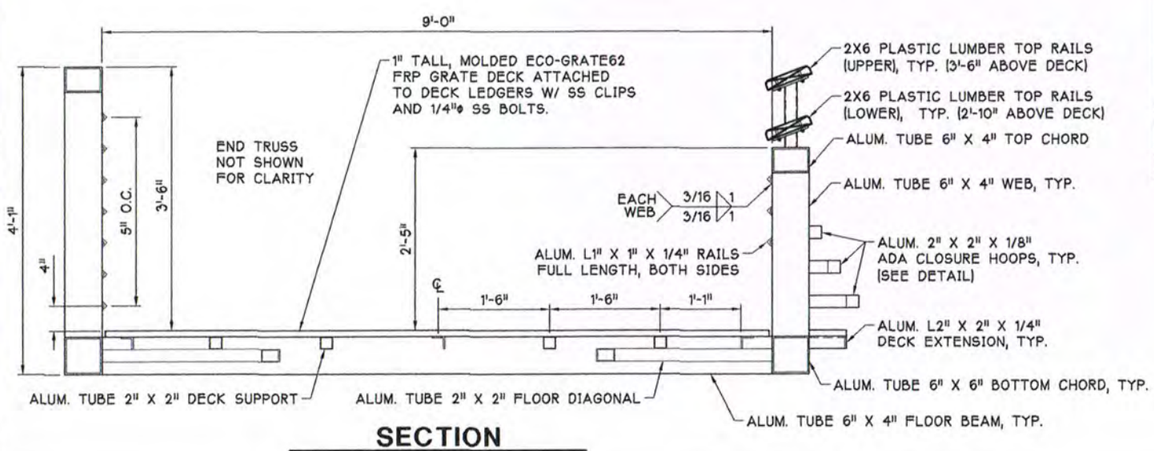

SECTION

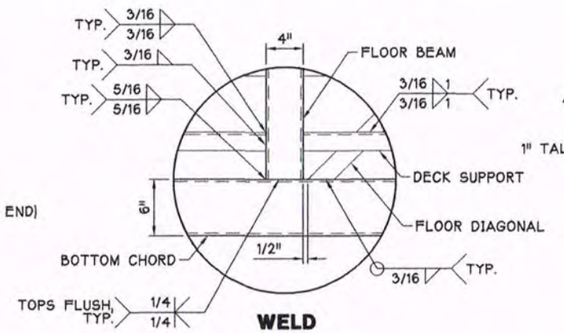

WELD DETAIL A

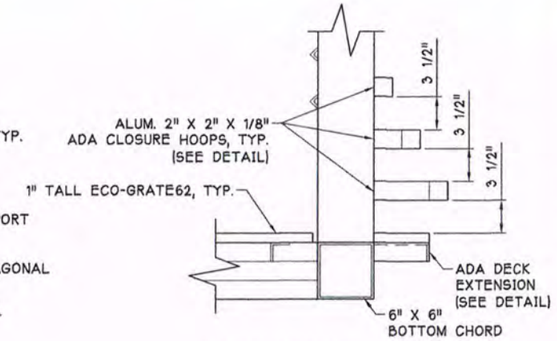

ADA CLOSURE LOOPS DETAIL

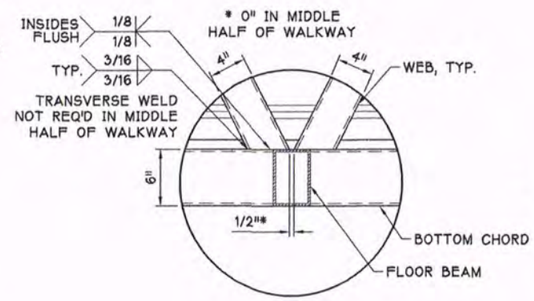

WELD DETAIL B

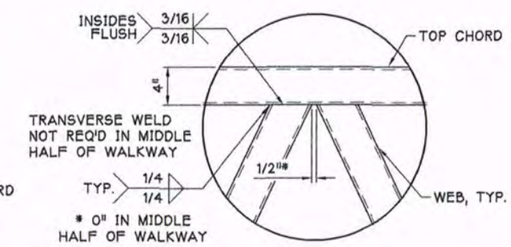

WELD DETAIL C

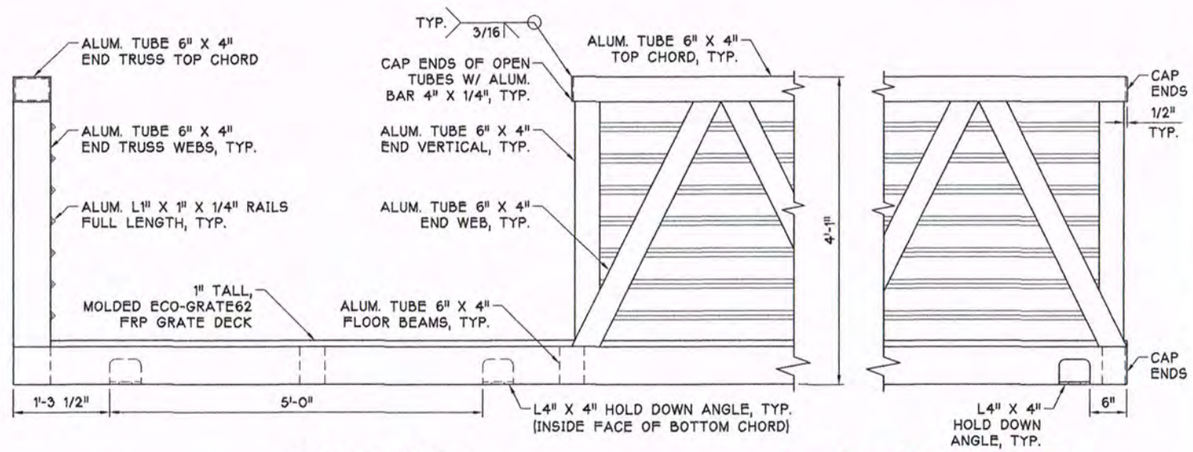

TRUSS ENDS

(TALL TRUSS SHOWN)

As-Built 7/2/21

KELLY D. LAFAVE
STATE OF WASHINGTON
30740
REGISTERED
PROFESSIONAL ENGINEER
21 JUL 2020

MARINE STRUCTURES ENGINEERING, INC.
1004 COMMERCIAL AVE. #364
ANACORTES, WA 98221

MANTLE INDUSTRIES, LLC. PH (360) 332-5276
1100-C YEW AVENUE, BLAINE, WASHINGTON 98230

SCALE:	APPROVED BY:	DRAWN BY: JML
DATE: JULY '20		REVISED:

HARRY TODD PARK
WATERFRONT RENOVATION

9' X 35' ALUMINUM PIER SPAN C
PLAN, ELEVATION, SECTION & DETAILS

DRAWING NUMBER 3 OF 6

3029-HARRY TODD PIERS\PIER SPANS 7X35.DWG
21 JULY 2020